TOSHIBA

Ref.-No. SMMS02-AE-10-05

Super Modular Multi
Design Manual

HFC R-410A

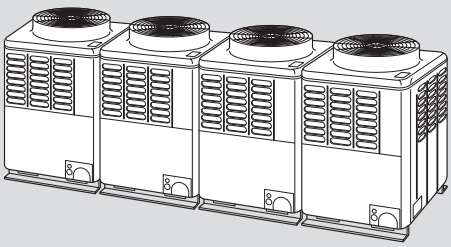

Indoor unit

- **4-way ceiling cassette**
  MMU-AP0091H, AP0121H, AP0151H,
  MMU-AP0181H, AP0241H, AP0271H,
  MMU-AP0301H, AP0361H, AP0481H
  MMU-AP0561H
- **2-way ceiling cassette**
  MMU-AP0071WH, AP0091WH, AP0121WH,
  MMU-AP0151WH, AP0181WH, AP0241WH,
  MMU-AP0271WH, AP0301WH
- **1-way ceiling cassette**
  MMU-AP0071YH, AP0091YH, AP0121YH,
  MMU-AP0151SH, AP0181SH, AP0241SH
- **Standard ducted unit**
  MMD-AP0071BH, AP0091BH, AP0121BH,
  MMD-AP0151BH, AP0181BH, AP0241BH,
  MMD-AP0271BH, AP0301BH, AP0361BH,
  MMD-AP0481BH, AP0561BH
- **High-pressure ducted unit**
  MMD-AP0181H, AP0241H, AP0271H,
  MMD-AP0361H, AP0481H, AP0721H,
  MMD-AP0961H
- **Slim duct unit**
  MMD-AP0071SPH, AP0091SPH,
  MMD-AP0121SPH, AP0151SPH,
  MMD-AP0181SPH
- **Ceiling-suspended unit**
  MMC-AP0151H, AP0181H, AP0241H,
  MMC-AP0271H, AP0361H, AP0481H
- **High-wall unit**
  MMK-AP0071H, AP0091H, AP0121H,
  MMK-AP0151H, AP0181H, AP0241H
  MMK-AP0072H, AP0092H, AP0122H
- **Floor-mounted console unit**
  MML-AP0071H, AP0091H, AP0121H,
  MML-AP0151H, AP0181H, AP0241H
- **Concealed chassis unit**
  MML-AP0071BH, AP0091BH, AP0121BH,
  MML-AP0151BH, AP0181BH, AP0241BH
- **Floor-mounted cabinet unit**
  MMF-AP0151H, AP0181H, AP0241H
  MMF-AP0271H, AP0361H, AP0481H
  MMF-AP0561H

Outdoor unit

COOLING ONLY MODEL

- **Inverter unit**
  MMY-MAP0501T8, MAP0601T8
  MMY-MAP0801T8, MAP1001T8
  MMY-MAP1201T8

HEAT PUMP MODEL

- **Inverter unit**
  MMY-MAP0501HT8, MAP0601HT8
  MMY-MAP0801HT8, MAP1001HT8
  MMY-MAP1201HT8

Contents

1. Outline of Toshiba Super Modular Multi System (S-MMS) 4
2. Summary of system equipment 7
3. Basic system configuration 13
4. Equipment selection procedure 19
5. Refrigerant piping design 29
6. Wiring design 34
7. Controls 39
8. Accessories 45
9. Technical specifications 46
10. Fan characteristics 69
11. Dimensional drawings 75

This manual is used for both cooling only and heat pump models.

1. Outline of Toshiba Super Modular Multi System (S-MMS)

◆ Branching

Combination of line and header branching is highly flexible. This allows for the shortest design route possible, thereby saving on installation time and cost. Line/header branching after header branching is only available with Toshiba Super MMS.

Line branching

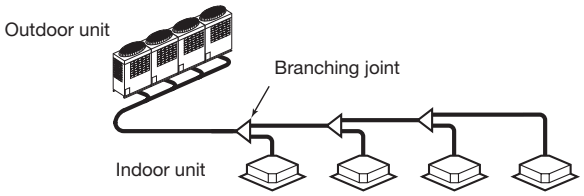

Header branching

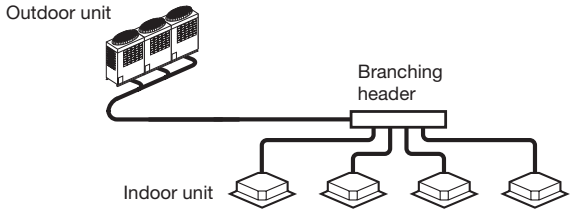

Line and header branching

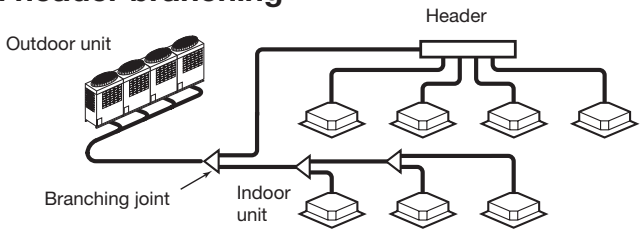

Line branching after header branching

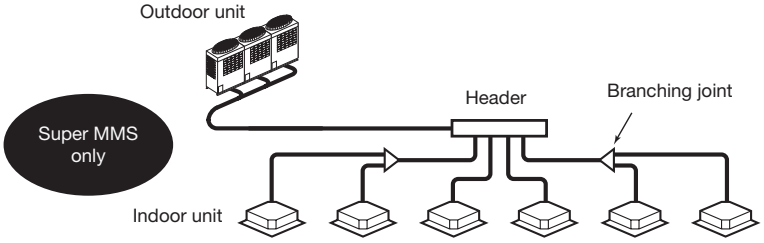

Header branching after header branching

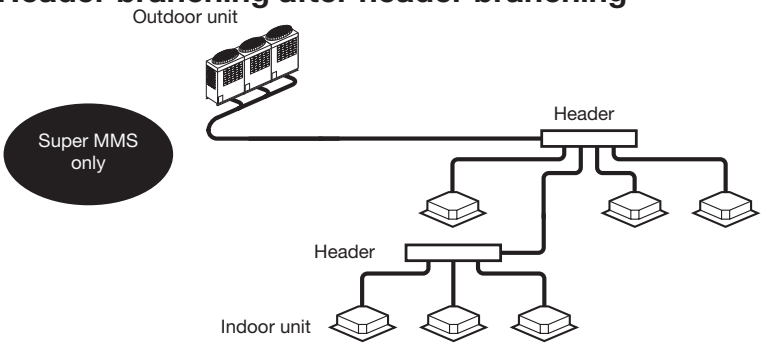

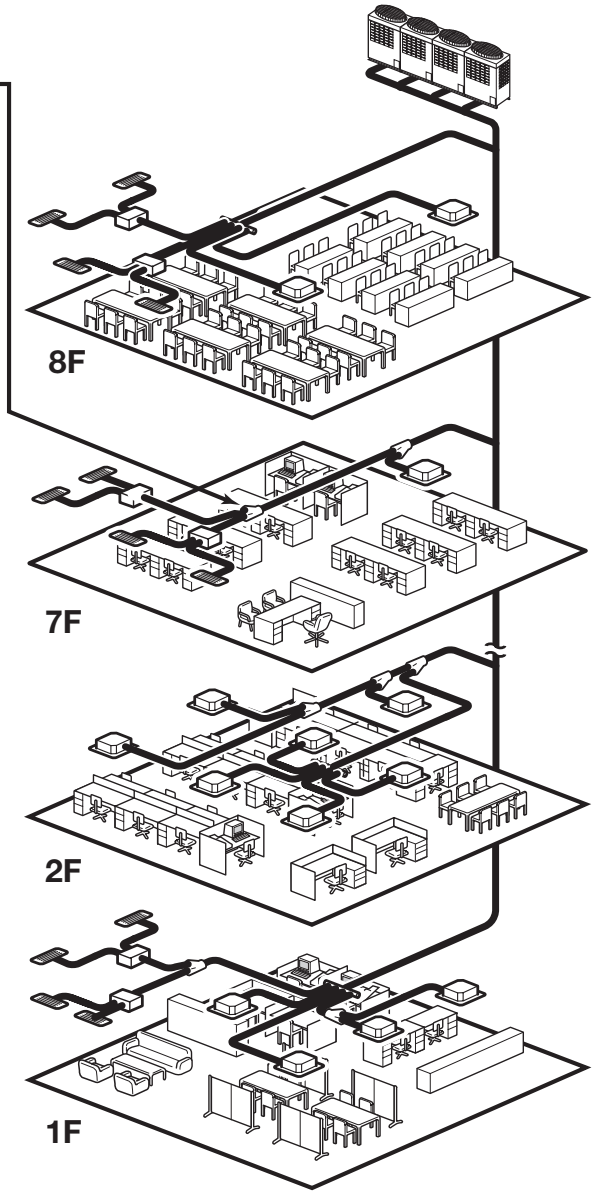

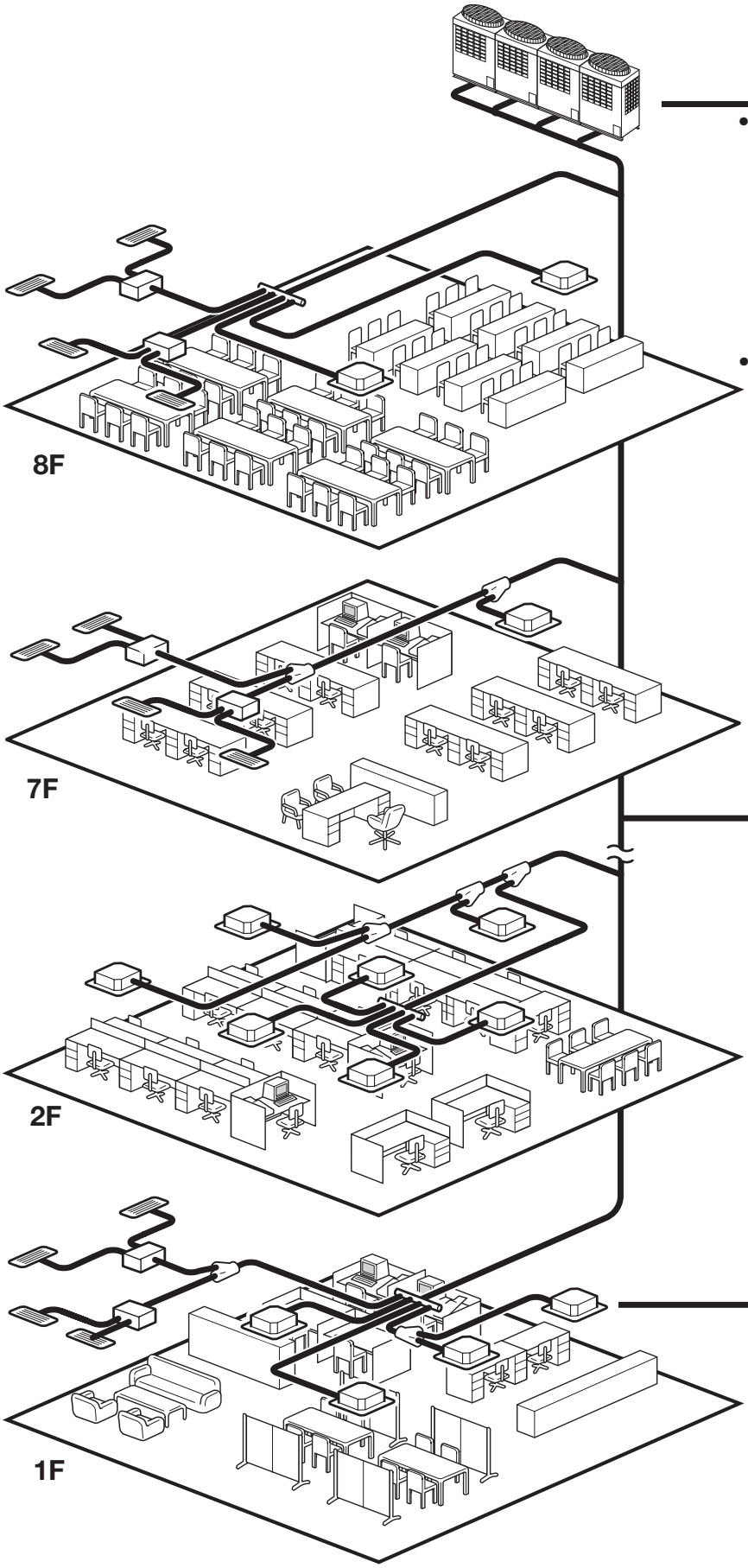

- Non-polarized control wiring between outdoor and indoor units

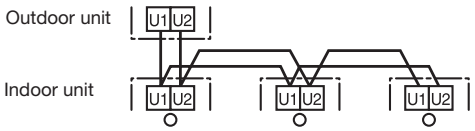

- Wiring diagnosis system
  Use the switches on the micro processor PCB of the outdoor unit.
  - Detects wiring to the indoor unit a4 which should not be in system A.
  - b4 is missing in system B.

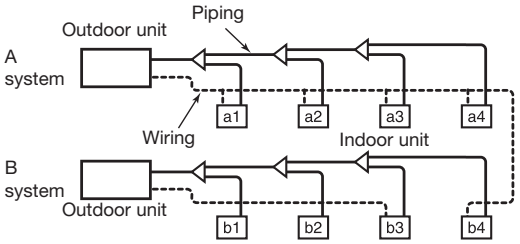

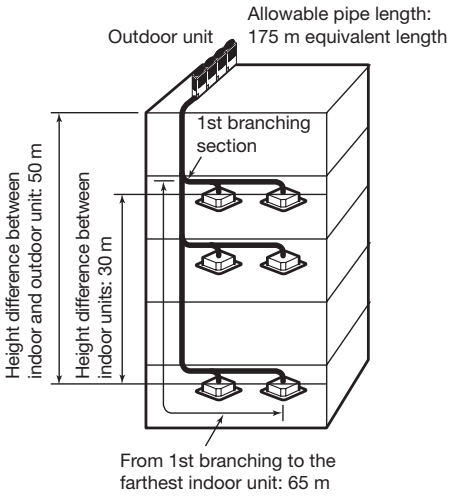

◆ Compact

The design of the modular Toshiba Super MMS outdoor unit allows for easy unit manoeuvring into any standard lift. Its compactness also allows it to be easily installed in limited spaces.

◆ Largest system capacity

Toshiba Super MMS can be combined up to 48 hp (135 kW) as one refrigerant system.

◆ Energy saving design

The units have the best energy efficiency ratio of any VRF unit. Compared with a conventional chiller fan coil system, a large energy saving can be realized.

◆ Advanced bus communication system

Wiring between indoor and outdoor units is a simple 2-wire system.
The communication address is also automatically configured.
A default test mode operation is available.

◆ Self-diagnostic system

Comprehensive troubleshooting code enables quick identification of problems arising.

◆ High lift design

An equivalent pipe length of 175 m and vertical lift of 50 m are possible with the Toshiba Super MMS.
The vertical lift between indoor units of 30 m is the highest in the industry.
This allows for greater flexibility in the location of the system.

◆ Multiple indoor units

Indoor units with different capacities and configurations can be combined up to 135% of the outdoor unit capacity.
A maximum of 48 indoor units can be combined with the 30-48 hp outdoor units.

◆ Intelligent control

Toshiba Super MMS intelligent controls and modulating valves deliver the required capacity, in accordance with the load variation from 50% to 100%.
The intelligent controls and modulating valves limit or increase the cooling capacity dynamically so humidity and temperature are kept in the comfort zone.

◆ Wide control applications

Artificial Intelligence Network system

- Central control and monitoring system available
- Weekly schedule operation through weekly timer

Integration with a Building Management System (BMS) is available.

2. Summary of system equipment

Technical specifications - outdoor units

Rating	hp	5	6	8	10	12
Cooling only model MMY-MAP		**0501T8**	**0601T8**	**0801T8**	**1001T8**	**1201T8**
Heat pump model MMY-MAP		**0501HT8**	**0601HT8**	**0801HT8**	**1001HT8**	**1201HT8**
Cooling capacity	kW	14.0	16.0	22.4	28.0	33.5
Heating capacity	kW	16.0	18.0	25.0	31.5	37.5

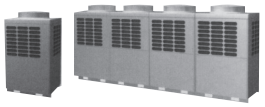

Technical specifications - combination of outdoor units

Rating	hp	5	6	8	10	12	14	16
Cooling only model MMY-MAP		**0501T8**	**0601T8**	**0801T8**	**1001T8**	**1201T8**	**1401T8**	**1601T8**
Heat pump model MMY-MAP		**0501HT8**	**0601HT8**	**0801HT8**	**1001HT8**	**1201HT8**	**1401HT8**	**1601HT8**
Cooling capacity	kW	14.0	16.0	22.4	28.0	33.5	38.4	45.0
Heating capacity	kW	16.0	18.0	25.0	31.5	37.5	43.0	50.0
Combined outdoor units	hp	5	6	8	10	12	8	8
		-	-	-	-	-	6	8
No. of connectable indoor units		8	10	13	16	20	23	27

Rating	hp	18	20	22	22	24	24	26
Cooling only model MMY-MAP		**1801T8**	**2001T8**	**2201T8**	**2211T8**	**2401T8**	**2411T8**	**2601T8**
Heat pump model MMY-MAP		**1801HT8**	**2001HT8**	**2201HT8**	**2211HT8**	**2401HT8**	**2411HT8**	**2601HT8**
Cooling capacity	kW	50.4	56.0	61.5	61.5	68.0	68.0	73.0
Heating capacity	kW	56.5	63.0	69.0	69.0	76.5	76.5	81.5
Combined outdoor units	hp	10	10	8	12	8	12	10
		8	10	8	10	8	12	8
		-	-	6	-	8	-	8
No. of connectable indoor units		30	33	37	37	40	40	43

Rating	hp	28	30	32	32	34	34	36
Cooling only model MMY-MAP		**2801T8**	**3001T8**	**3201T8**	**3211T8**	**3401T8**	**3411T8**	**3601T8**
Heat pump model MMY-MAP		**2801HT8**	**3001HT8**	**3201HT8**	**3211HT8**	**3401HT8**	**3411HT8**	**3601HT8**
Cooling capacity	kW	78.5	84.0	90.0	90.0	96.0	96.0	101.0
Heating capacity	kW	88.0	95.0	100.0	100.0	108.0	108.0	113.0
Combined outdoor units	hp	10	10	8	12	10	12	10
		10	10	8	10	8	12	10
		8	10	8	10	8	10	8
		-	-	8	-	8	-	8
No. of connectable indoor units		47	48	48	48	48	48	48

Rating	hp	36	38	40	42	44	46	48
Cooling only model MMY-MAP		**3611T8**	**3801T8**	**4001T8**	**4201T8**	**4401T8**	**4601T8**	**4801T8**
Heat pump model MMY-MAP		**3611HT8**	**3801HT8**	**4001HT8**	**4201HT8**	**4401HT8**	**4601HT8**	**4801HT8**
Cooling capacity	kW	101.0	106.5	112.0	118.0	123.5	130.0	135.0
Heating capacity	kW	113.0	119.5	126.5	132.0	138.0	145.0	150.0
Combined outdoor units	hp	12	10	10	12	12	12	12
		12	10	10	10	12	12	12
		12	10	10	10	10	12	12
		-	8	10	10	10	10	12
No. of connectable indoor units		48	48	48	48	48	48	48

Branching joints and headers

	Model	Usage		Appearance
Y-shape branching joint (*3)	RBM-BY53E	Indoor unit capacity code (*1) : Total below 6.4		
	RBM-BY103E	Indoor unit capacity code (*1) : Total 6.4 or more and below 14.2	(*2)	
	RBM-BY203E	Indoor unit capacity code (*1) : Total 14.2 or more and below 25.2	(*2)	
	RBM-BY303E	Indoor unit capacity code (*1) : Total 25.2 or more	(*2)	
4-branching header (*4)	RBM-HY1043E	Indoor unit capacity code (*1) : Total below 14.2	Max.4 branches	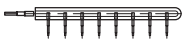
	RBM-HY2043E	Indoor unit capacity code (*1) : Total 14.2 or more and below 25.2		
8-branching header (*4) (*5)	RBM-HY1083E	Indoor unit capacity code (*1) : Total below 14.2	Max.8 branches	
	RBM-HY2083E	Indoor unit capacity code (*1) : Total 14.2 or more and below 25.2		
T-shape branching joint (For connection of outdoor units)	RBM-BT13E	1 set of 3 types of T-shape joint pipes as described below: The required quantity is arranged and they are combined at the site.		

Connection piping	Corresponding dia. (mm)	Q'ty
Balance pipe	Ø3/8"	1
Liquid side piping	Ø3/8" to Ø7/8"	1
Gas side piping	Ø5/8" to Ø1-5/8"	1

*1 The capacity code can be obtained from page 10 (capacity code is not actual capacity).
*2 If total capacity code value of indoor unit exceeds that of outdoor unit, apply capacity code of outdoor unit.
*3 When using Y-shape branching joint for 1st branching, select according to capacity code of outdoor unit.
*4 Max. 6.0 capacity code in total can be connected.
*5 If capacity code of outdoor unit is 26 and more, it is not used for 1st branching.
*6 Model names for outdoor and indoor units described in this guide are shortened because of the space constraints.

Outdoor unit model line-up - cooling only units

hp (capacity code)	Model MMY-	No. of combined units	Inverter 5 hp MMY-	Q'ty used	Inverter 6 hp MMY-	Q'ty used	Inverter 8 hp MMY-	Qty used	Inverter 10 hp MMY-	Q'ty used	Inverter 12 hp MMY-	Q'ty used
5 hp (5)	MAP0501T8	1	MAP0501T8	1								
6 hp (6)	MAP0601T8	1			MAP0601T8	1						
8 hp (8)	MAP0801T8	1					MAP0801T8					
10 hp (10)	MAP1001T8	1							MAP1001T8	1		
12 hp (12)	MAP1201T8	1									MAP1201T8	1
14 hp (14)	AP1401T8	2			MAP0601T8	1	MAP0801T8					
16 hp (16)	AP1601T8	2					MAP0801T8	2				
18 hp (18)	AP1801T8	2					MAP0801T8	1	MAP1001T8	1		
20 hp (20)	AP2001T8	2							MAP1001T8	2		
22 hp (22)	AP2201T8	3			MAP0601T8	1	MAP0801T8	2				
22 hp (22)	AP2211T8	2							MAP1001T8	1	MAP1201T8	1
24 hp (24)	AP2401T8	3					MAP0801T8	3				
24 hp (24)	AP2411T8	2									MAP1201T8	2
26 hp (26)	AP2601T8	3					MAP0801T8	2	MAP1001T8	1		
28 hp (28)	AP2801T8	3					MAP0801T8	1	MAP1001T8	2		
30 hp (30)	AP3001T8	3							MAP1001T8	3		
32 hp (32)	AP3201T8	4					MAP0801T8	4				
32 hp (32)	AP3211T8	3							MAP1001T8	2	MAP1201T8	1
34 hp (34)	AP3401T8	4					MAP0801T8	3	MAP1001T8	1		
34 hp (34)	AP3411T8	3							MAP1001T8	1	MAP1201T8	2
36 hp (36)	AP3601T8	4					MAP0801T8	2	MAP1001T8	2		
36 hp (36)	AP3611T8	3									MAP1201T8	3
38 hp (38)	AP3801T8	4					MAP0801T8	1	MAP1001T8	3		
40 hp (40)	AP4001T8	4							MAP1001T8	4		
42 hp (42)	AP4201T8	4							MAP1001T8	3	MAP1201T8	1
44 hp (44)	AP4401T8	4							MAP1001T8	2	MAP1201T8	2
46 hp (46)	AP4601T8	4							MAP1001T8	1	MAP1201T8	3
48 hp (48)	AP4801T8	4									MAP1201T8	4

1. Product designation

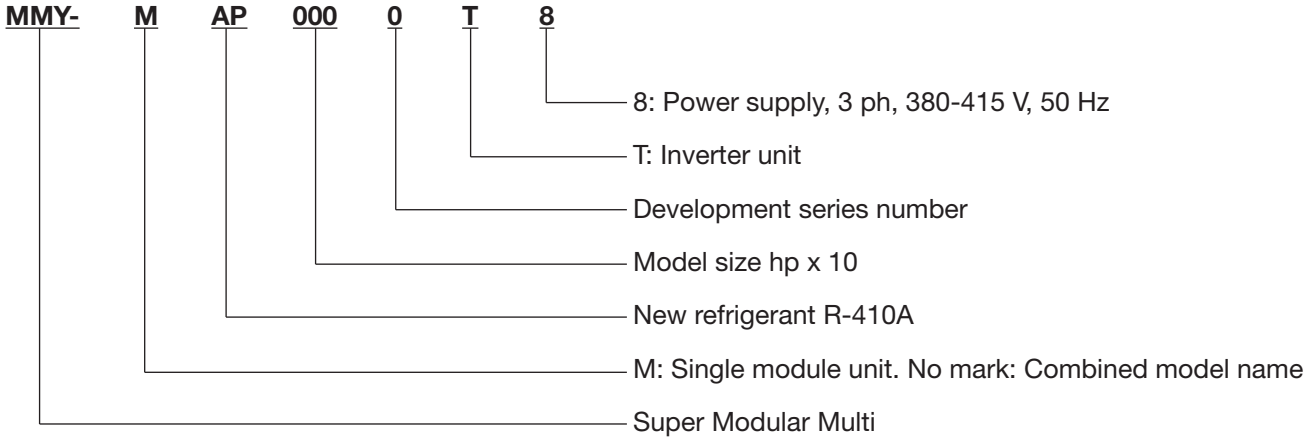

2. Combined capacity range

No. of combined units: 1 to 4 units
Capacity of combined units: 14 hp (140 type) to 48 hp (480 type)

3. Rated conditions

Cooling: Indoor air temperature 27°C db/19°C wb, outdoor air temperature 35°C db.

Outdoor unit model line-up - heat pump units

hp (capacity code)	Model MMY-	No. of combined units	Inverter 5 hp MMY-	Q'ty used	Inverter 6 hp MMY-	Q'ty used	Inverter 8 hp MMY-	Qty used	Inverter 10 hp MMY-	Q'ty used	Inverter 12 hp MMY-	Q'ty used
5 hp (5)	MAP0501HT8	1	MAP0501HT8	1								
6 hp (6)	MAP0601HT8	1			MAP0601HT8	1						
8 hp (8)	MAP0801HT8	1					MAP0801HT8	1				
10 hp (10)	MAP1001HT8	1							MAP1001HT8	1		
12 hp (12)	MAP1201HT8	1									MAP1201HT8	1
14 hp (14)	AP1401HT8	2			MAP0601HT8	1	MAP0801HT8	1				
16 hp (16)	AP1601HT8	2					MAP0801HT8	2				
18 hp (18)	AP1801HT8	2					MAP0801HT8	1	MAP1001HT8	1		
20 hp (20)	AP2001HT8	2							MAP1001HT8	2		
22 hp (22)	AP2201HT8	3			MAP0601HT8	1	MAP0801HT8	2				
22 hp (22)	AP2211HT8	2							MAP1001HT8	1	MAP1201HT8	1
24 hp (24)	AP2401HT8	3					MAP0801HT8	3				
24 hp (24)	AP2411HT8	2									MAP1201HT8	2
26 hp (26)	AP2601HT8	3					MAP0801HT8	2	MAP1001HT8	1		
28 hp (28)	AP2801HT8	3					MAP0801HT8	1	MAP1001HT8	2		
30 hp (30)	AP3001HT8	3							MAP1001HT8	3		
32 hp (32)	AP3201HT8	4					MAP0801HT8	4				
32 hp (32)	AP3211HT8	3							MAP1001HT8	2	MAP1201HT8	1
34 hp (34)	AP3401HT8	4					MAP0801HT8	3	MAP1001HT8	1		
34 hp (34)	AP3411HT8	3							MAP1001HT8	1	MAP1201HT8	2
36 hp (36)	AP3601HT8	4					MAP0801HT8	2	MAP1001HT8	2		
36 hp (36)	AP3611HT8	3									MAP1201HT8	3
38 hp (38)	AP3801HT8	4					MAP0801HT8	1	MAP1001HT8	3		
40 hp (40)	AP4001HT8	4							MAP1001HT8	4		
42 hp (42)	AP4201HT8	4							MAP1001HT8	3	MAP1201HT8	1
44 hp (44)	AP4401HT8	4							MAP1001HT8	2	MAP1201HT8	2
46 hp (46)	AP4601HT8	4							MAP1001HT8	1	MAP1201HT8	3
48 hp (48)	AP4801HT8	4									MAP1201HT8	4

1. Product designation

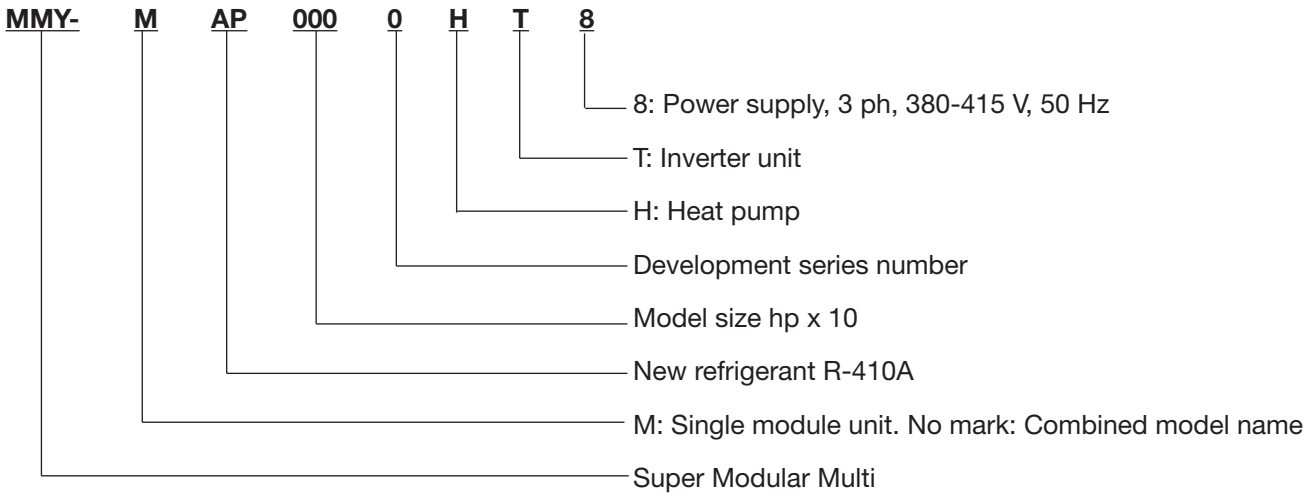

2. Combined capacity range

No. of combined units: 1 to 4 units
Capacity of combined units: 14 hp (140 type) to 48 hp (480 type)

3. Rated conditions

Cooling: Indoor air temperature 27°C db/19°C wb, outdoor air temperature 35°C db.
Heating: Indoor air temperature 20°C db, outdoor air temperature 7°C db/6°C wb

4. Technical specifications - indoor units

Model type	Model name	Capacity code	Cooling capacity kW	Heating capacity kW	Height mm	Width mm	Depth mm	Weight kg
4-way ceiling cassette	MMU-AP0091H	1	2.8	3.2	256	840	840	20
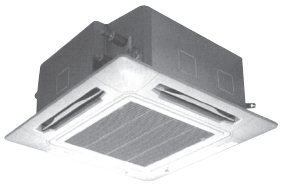	MMU-AP0121H	1.25	3.6	4.0				
	MMU-AP0151H	1.7	4.5	5.0	256	840	840	22
	MMU-AP0181H	2	5.6	6.3				
	MMU-AP0241H	2.5	7.1	8.0	256	840	840	23
	MMU-AP0271H	3	8.0	9.0				
	MMU-AP0301H	3.2	9.0	10.0				
	MMU-AP0361H	4	11.2	12.5	319	840	840	28
	MMU-AP0481H	5	14.0	16.0				
	MMU-AP0561H	6	16.0	18.0				
2-way ceiling cassette	MMU-AP0071WH	0.8	2.2	2.5	398	830	550	33
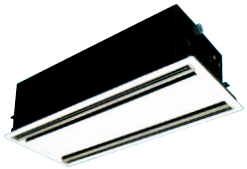	MMU-AP0091WH	1	2.8	3.2				
	MMU-AP0121WH	1.25	3.6	4.0				
	MMU-AP0151WH	1.7	4.5	5.0	398	1350	550	44
	MMU-AP0181WH	2	5.6	6.3				
	MMU-AP0241WH	2.5	7.1	8.0	398	1350	550	48
	MMU-AP0271WH	3	8.0	9.0				
	MMU-AP0301WH	3.2	9.0	10.0				
	MMU-AP0481WH	5	14.0	16.0	406	1650	620	52
1-way ceiling cassette	MMU-AP0071YH	0.8	2.2	2.5	235	850	400	22
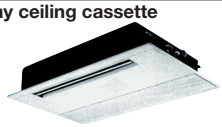	MMU-AP0091YH	1	2.8	3.2				
	MMU-AP0121YH	1.25	3.6	4.0				
	MMU-AP0151SH	1.7	4.5	5.0	198	1100	655	27
	MMU-AP0181SH	2	5.6	6.3				
	MMU-AP0241SH	2.5	7.1	8.0	198	1200	655	31
Standard ducted unit	MMD-AP0071BH	0.8	2.2	2.5	320	550	800	27
	MMD-AP0091BH	1	2.8	3.2				
	MMD-AP0121BH	1.25	3.6	4.0				
	MMD-AP0151BH	1.7	4.5	5.0	320	700	800	30
	MMD-AP0181BH	2	5.6	6.3				
	MMD-AP0241BH	2.5	7.1	8.0	320	1000	800	39
	MMD-AP0271BH	3	8.0	9.0				
	MMD-AP0301BH	3.2	9.0	10.0				
	MMD-AP0361BH	4	11.2	12.5	320	1350	800	51
	MMD-AP0481BH	5	14.0	16.0				
	MMD-AP0561BH	6	16.0	18.0				
High-pressure ducted unit	MMD-AP0181H	2	5.6	6.3	380	850	660	50
	MMD-AP0241H	2.5	7.1	8.0	380	850	660	52
	MMD-AP0271H	3	8.0	9.0				
	MMD-AP0361H	4	11.2	12.5	380	850	660	56
	MMD-AP0481H	5	14.0	16.0	380	1200	660	67
	MMD-AP0721H	8	22.4	25.0	470	1380	1250	155
	MMD-AP0961H	10	28.0	31.5				
Slim duct unit	MMD-AP0071SPH	0.8	2.2	2.5	210	845	645	22
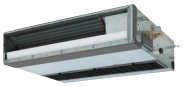	MMD-AP0091SPH	1	2.8	3.2				22
	MMD-AP0121SPH	1.25	3.6	4.0				22
	MMD-AP0151SPH	1.7	4.5	5.0				23
	MMD-AP0181SPH	2	5.6	6.3				23
Ceiling-suspended unit	MMC-AP0151H	1.7	4.5	5.0	210	910	680	21
	MMC-AP0181H	2	5.6	6.3				
	MMC-AP0241H	2.5	7.1	8.0	210	1180	680	25
	MMC-AP0271H	3	8.0	9.0				
	MMC-AP0361H	4	11.2	12.5	210	1595	680	33
	MMC-AP0481H	5	14.0	16.0				
High-wall unit	MMK-AP0071H	0.8	2.2	2.5	368	895	210	18
	MMK-AP0091H	1	2.8	3.2				
	MMK-AP0121H	1.25	3.6	4.0				
	MMK-AP0151H	1.7	4.5	5.0	368	1055	210	19
	MMK-AP0181H	2	5.6	6.3				
	MMK-AP0241H	2.5	7.1	8.0	368	1430	210	25
	MMK-AP0072H	0.8	2.2	2.5	275	790	208	11
	MMK-AP0092H	1.0	2.8	3.2				
	MMK-AP0122H	1.25	3.6	4.0				
Floor-mounted console unit	MML-AP0071H	0.8	2.2	2.5	630	950	230	37
	MML-AP0091H	1	2.8	3.2				
	MML-AP0121H	1.25	3.6	4.0				
	MML-AP0151H	1.7	4.5	5.0				
	MML-AP0181H	2	5.6	6.3				
	MML-AP0241H	2.5	7.1	8.0	630	950	230	40
Concealed chassis unit	MML-AP0071BH	0.8	2.2	2.5	600	745	220	21
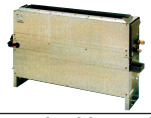	MML-AP0091BH	1	2.8	3.2				
	MML-AP0121BH	1.25	3.6	4.0				
	MML-AP0151BH	1.7	4.5	5.0	600	1045	220	29
	MML-AP0181BH	2	5.6	6.3				
	MML-AP0241BH	2.5	7.1	8.0				
Floor-mounted cabinet unit	MMF-AP0151H	1.7	4.5	5.0	1750	600	210	48
	MMF-AP0181H	2	5.6	6.3				
	MMF-AP0241H	2.5	7.1	8.0	1750	600	210	49
	MMF-AP0271H	3	8.0	9.0				
	MMF-AP0361H	4	11.2	12.5	1750	600	390	65
	MMF-AP0481H	5	14.0	16.0				
	MMF-AP0561H	6	16.0	18.0				

5. Remote controller

Appearance	Application	Function
Wired remote controller **RBC-AMT31E** 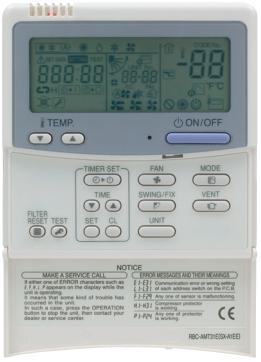	**Connected to indoor unit** 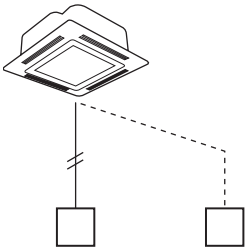 Wired remote controller Wired remote controller (for control with two controlling positions)	• Start/stop • Mode change • Temperature adjustment • Air flow adjustment • Timer function ① Three options are available: ⇨ On after selected time (one cycle) ⇨ Off after selected time (one cycle) ⇨ Off after selected time (re-occurring) To use, choose one of these options and the time delay before it occurs (minimum period is 0.5 hours). ② Combined with the weekly timer a weekly operating schedule can be set. • Filter maintenance time Automatically displays the maintenance time of the indoor filter. Filter LED flashes. • Self-diagnosis function Pressing the 'CHECK' button displays the problem cause using a check code. • Two controlling positions are available. Two remote controllers can be connected to one indoor unit. The indoor unit can then be operated from two separate locations.
Simplified remote controller **RBC-AS21E** 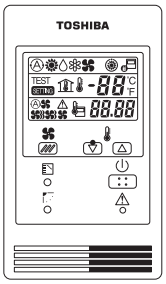 	**Connected to indoor unit** 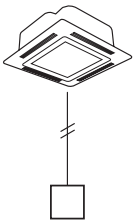 Simplified remote controller	• Start/stop • Temperature adjustment • Air flow adjustment • Check code display
Wireless remote controller kit **TCB-AX21U (W)-E** **RCB-AX22CE** **TCB-AX21E** 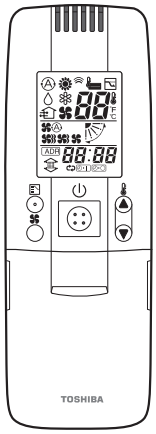 	**Connected to indoor unit** 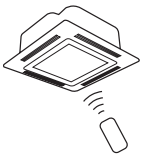	• Start/stop • Mode change • Temperature adjustment • Air flow adjustment • Timer function Three options are available: ⇨ On after selected time (one cycle) ⇨ Off after selected time (one cycle) ⇨ Off after selected time (re-occurring) To use, choose one of these options and the time delay before it occurs (minimum period is 0.5 hours). • Two controlling positions are available. Two wireless remote controllers can be connected to one indoor unit. The indoor unit can then be operated from two separate locations. • Check code display. **TCB-AX21U (W)-E** (For 4-way ceiling cassette) **RBC-AX22CE** (For ceiling-suspended unit) **TCB-AX21E** (For all units except high-pressure ducted units)

Appearance	Application	Function
Infrared remote controller **WH-H2UE** 	**Connected to indoor unit** 	• Start/stop • Mode change • Temperature adjustment • Air flow adjustment (5 steps) • Clock • Timer function - ON/OFF timer (10 min. steps) - Daily timer • High power mode • ECO mode (sleep timer with ECO-logic) • One-touch pre-set memory
Weekly timer **RBC-EXW21E** 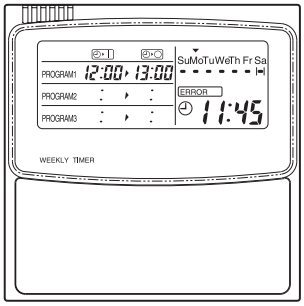	**Connected to central remote controller, wired remote controller** 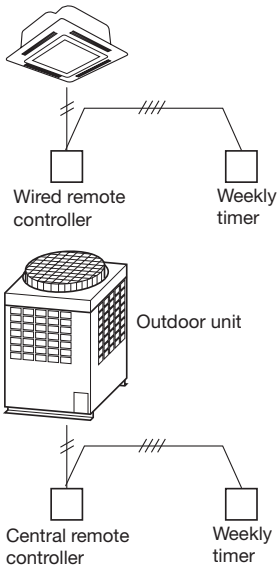	• Weekly schedule operation ① Setting start/stop times for each day of the week ② ON/OFF can be set 3 times a day. 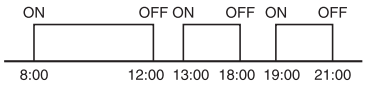 ③ Press 'CHECK' 'PROGRAM' 'DAY' button for easy program copying. ④ Two schedules a week can be specified (summer/winter schedule). ⑤ Press 'CANCEL' 'DAY' button for easy holiday override setting. ⑥ If power supply fails, the settings are stored in the memory for 100 hours.
Central remote controller **TCB-SC642TLE** 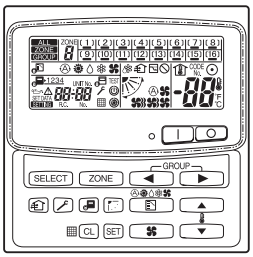	**Connected to outdoor unit, indoor unit** 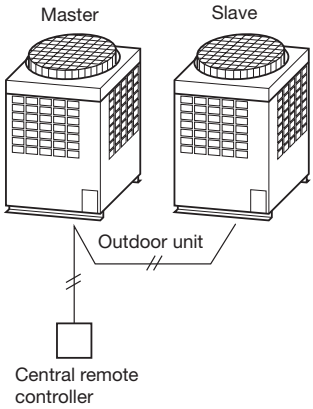 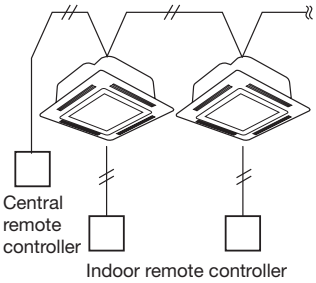	• Individual control of up to 64 indoor units • Individual control of max. 64 indoor units divided into 1 to 4 zones. (Up to 16 indoor units for each zone.) • Up to 16 outdoor master units are connectable. • 4 central control setting types to inhibit individual operation by remote controller can be selected. • Setting for one of 1 to 4 zones is available. • Usable with other central control devices (up to 10 central control devices in one control circuit). • Two control mode choices (Centrol controller mode Remote controller mode) • Settings of simultaneous ON/OFF 3 times for each day of the week combined with weekly timer.

3. Basic system configuration

System legend (example)
8 hp system

- Max. number of indoor units: 13 units
- Indoor unit capacity code: Min. 4
  Max. 10.8

Capacity code - total 10.4
Total number of units - 13

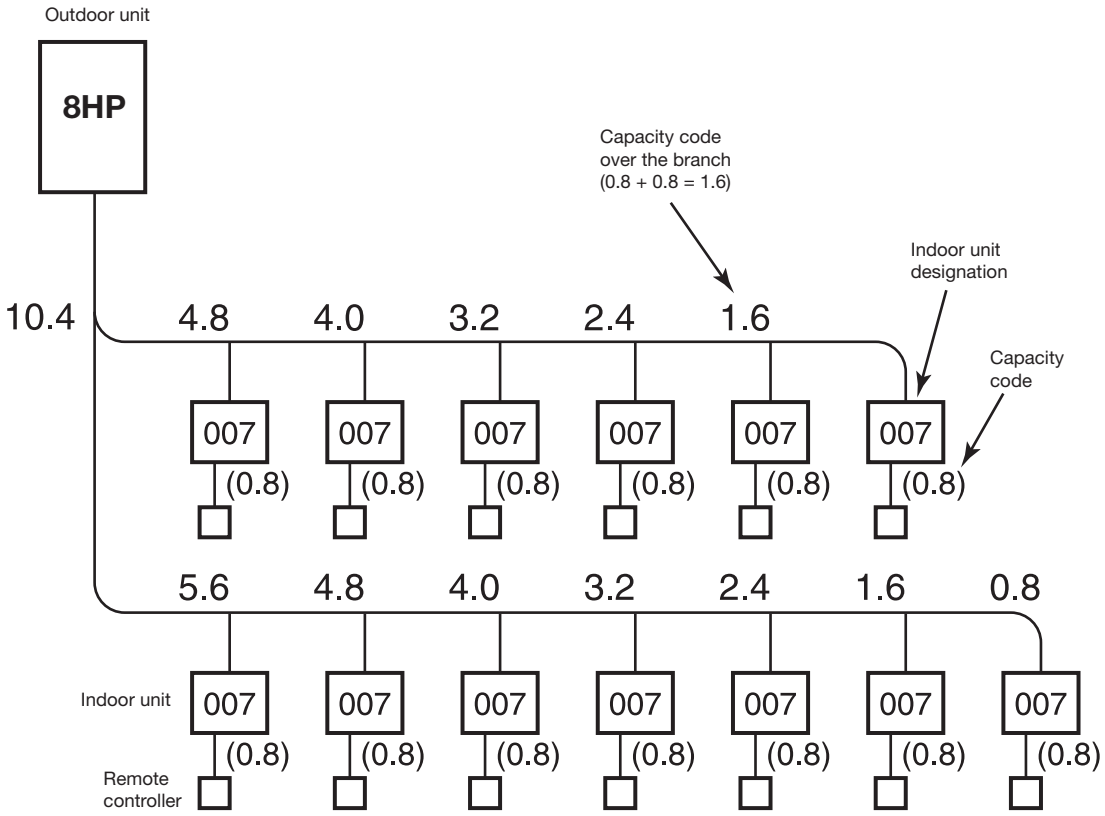

10 hp system

- Max. number of indoor units: 16 units
- Indoor unit capacity code: Min. 5
  Max. 13.5

Capacity code - total 12.8
Total number of units - 16

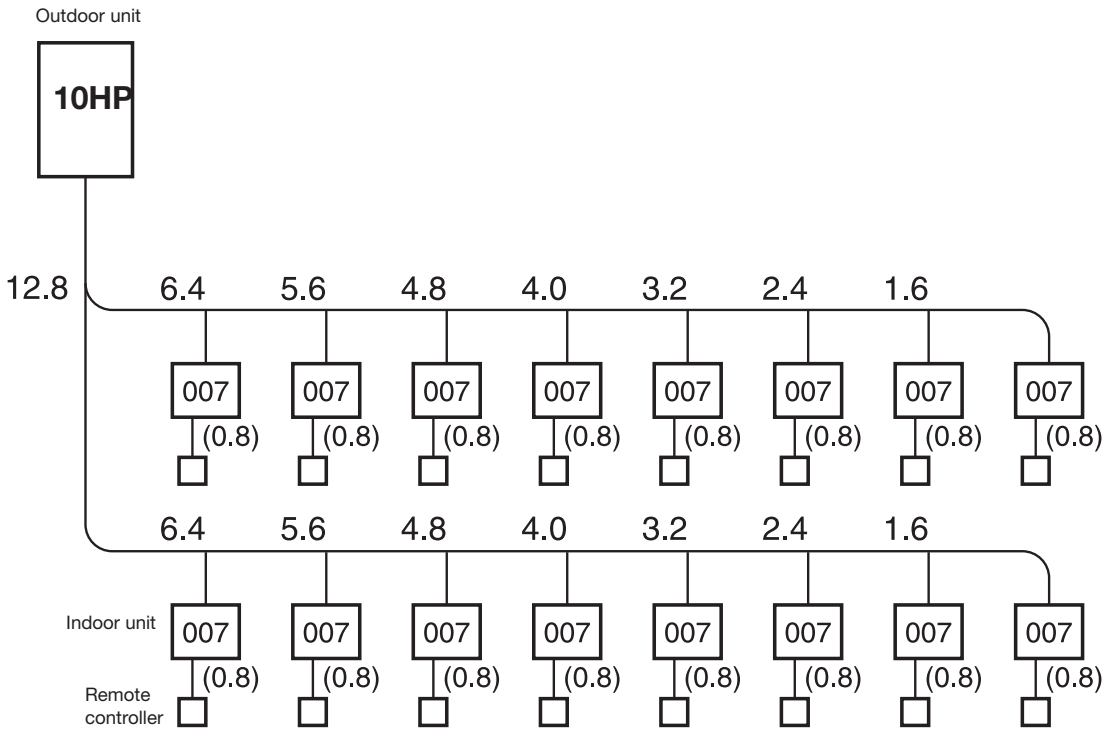

20 hp system

- Max. number of indoor units: 33 units
- Indoor unit capacity code: Min. 10
  Max. 27

Capacity code - total 26.75
Total number of units - 19

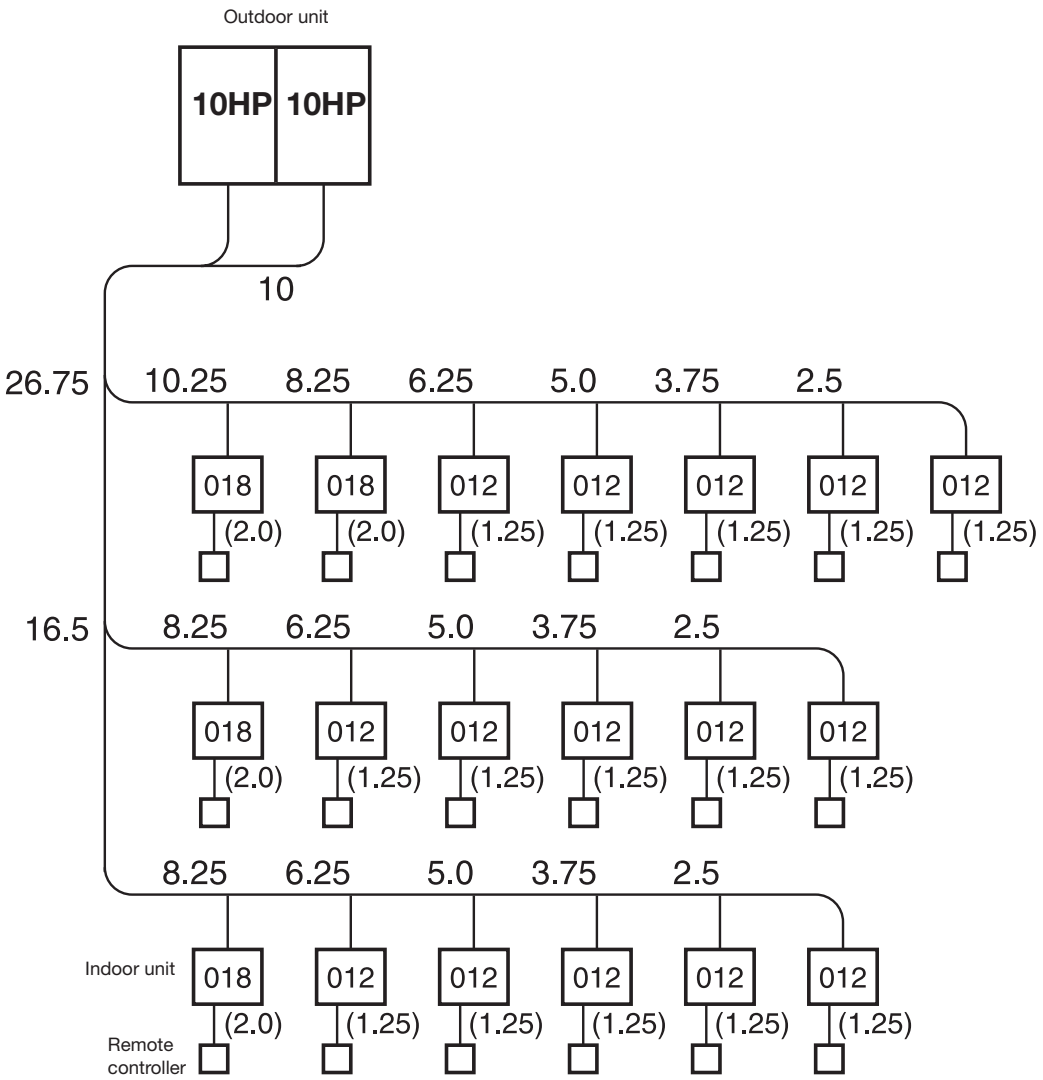

30 hp system

- Max. number of indoor units: 48 units
- Indoor unit capacity code: Min. 15
  Max. 40.5

Capacity code - total 40
Total number of units - 28

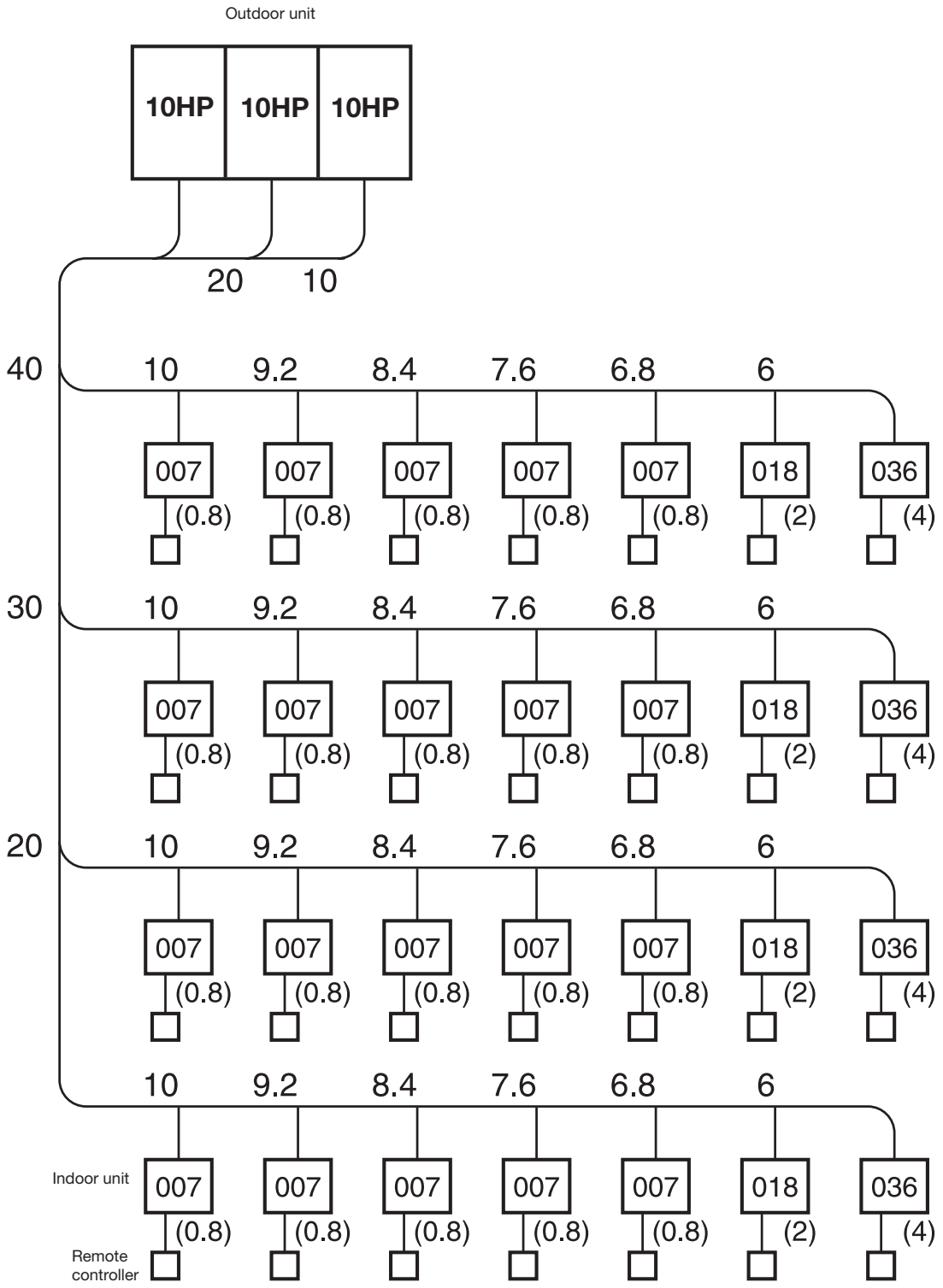

40 hp system

- Max. number of indoor units: 48 units
- Indoor unit capacity code: Min. 20
  Max. 54

Capacity code - total 53.75
Total number of units - 32

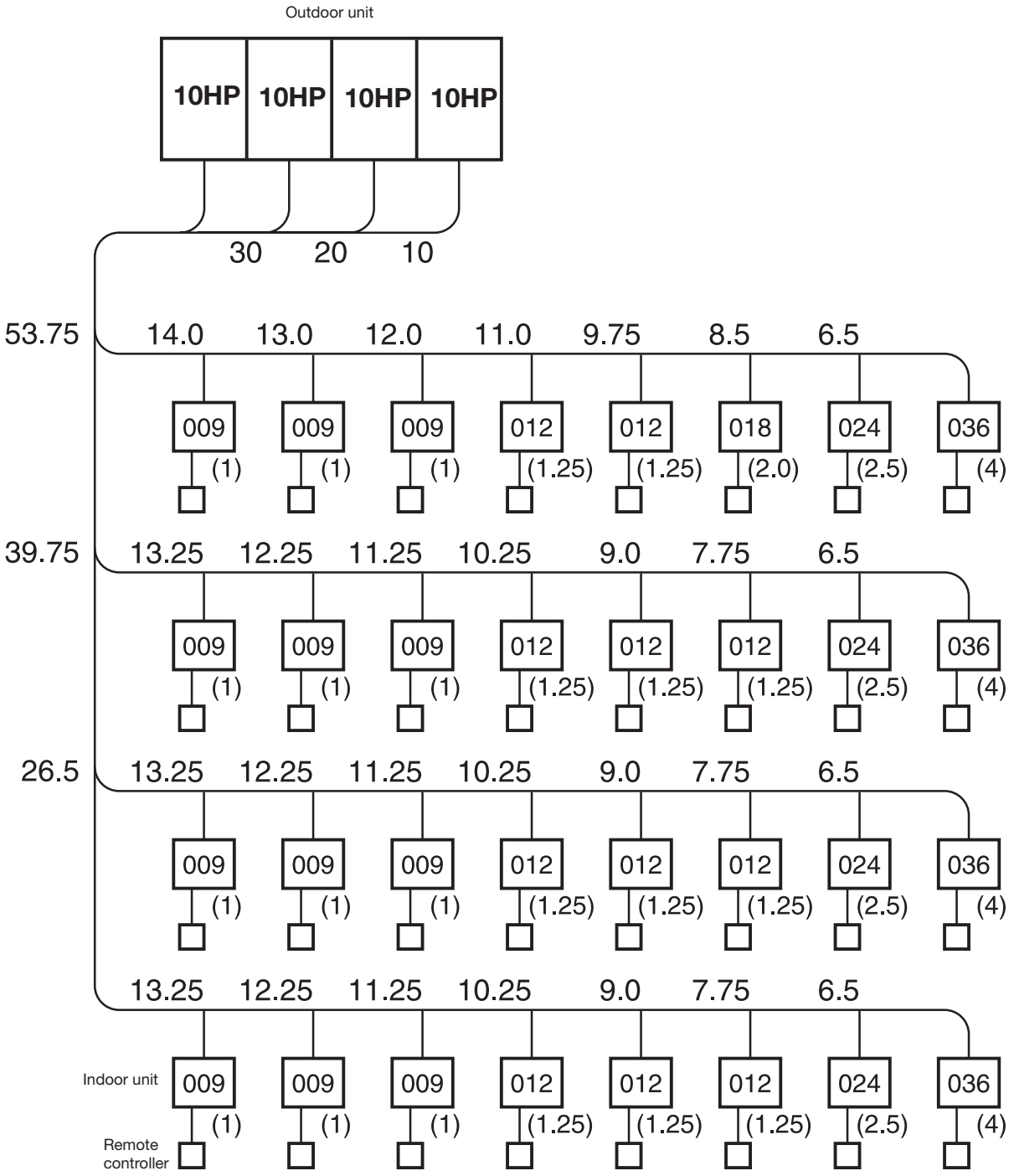

48 hp system

- Max. number of indoor units: 48 units
- Indoor unit capacity code: Min. 24
  Max. 64.8

Capacity code - total 61.9
Total number of units - 40

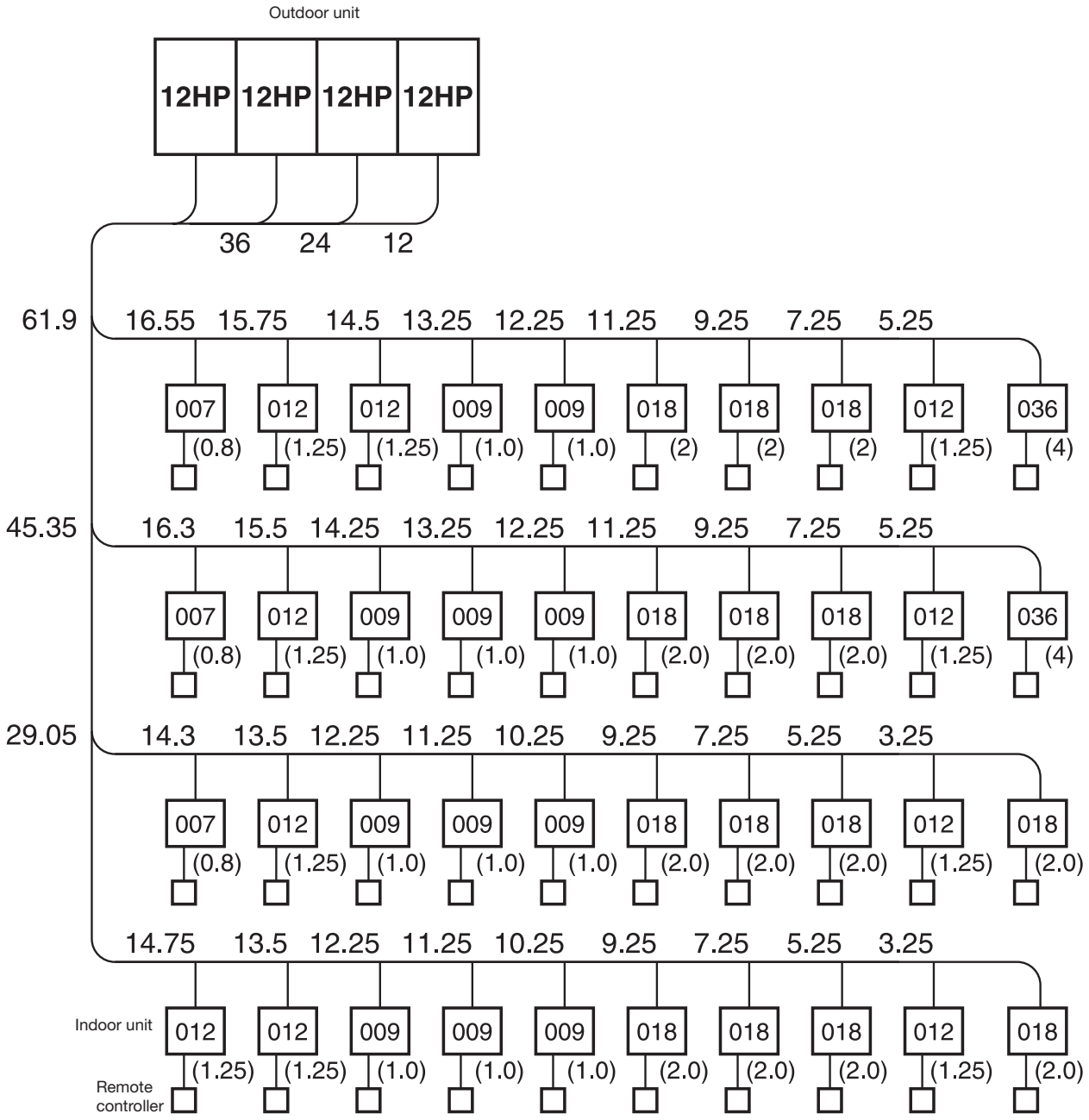

4. Equipment selection procedure

1. Selection flow chart

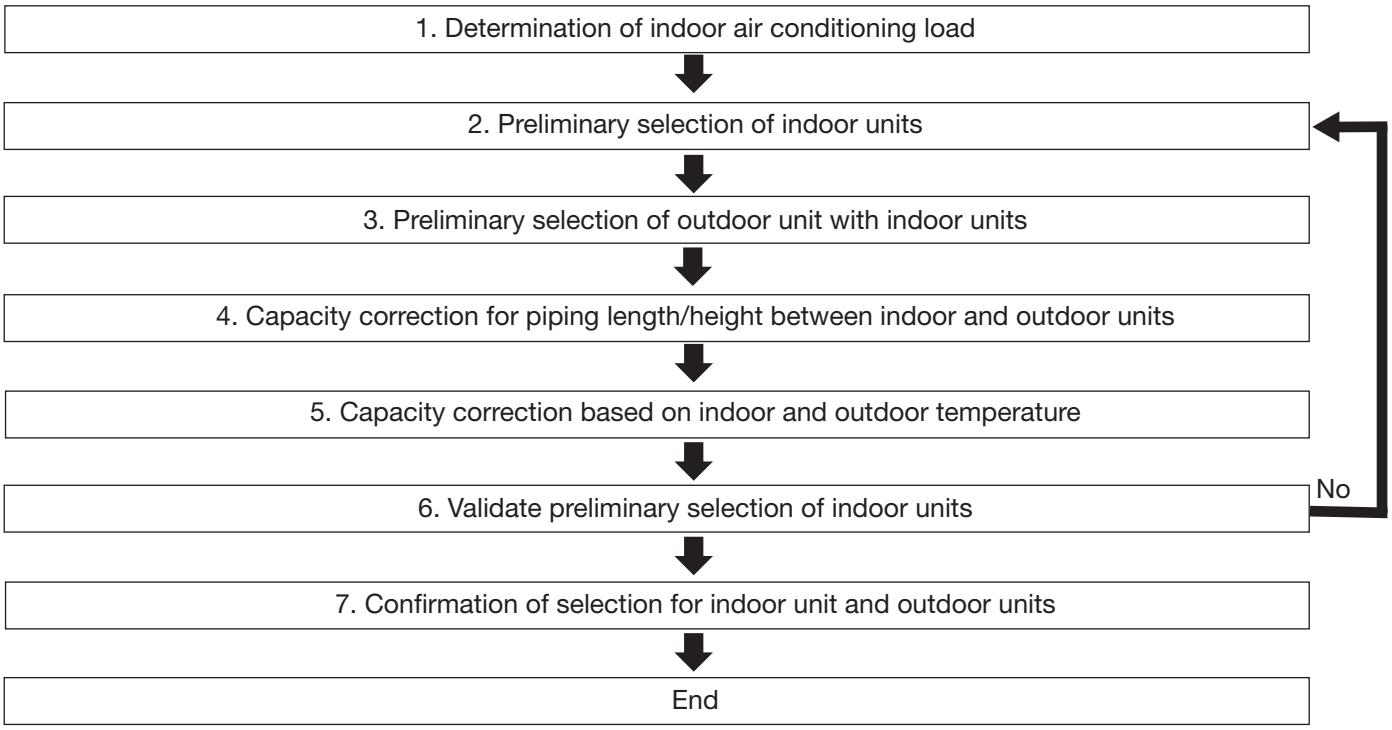

2. Indoor unit and outdoor unit combination

For indoor unit, the capacity code is decided for each model size.

Model size	007	009	012	015	018	024	027	030	036	048	056	072	096
Cooling capacity, kW	2.2	2.8	3.6	4.5	5.6	7.1	8.0	9.0	11.2	14.0	16.0	22.4	28.0
Capacity code	0.8	1	1.25	1.7	2	2.5	3	3.2	4	5	6	8	10

Note: Model size: corresponding to Btu/h. Capacity code: corresponding to horsepower.

For outdoor unit, maximum number of connectable indoor units and total capacity code of indoor units are decided.

Outdoor unit (cooling only)	Outdoor unit (heat pump)	Capacity code of outdoor unit	Max. No. of indoor units	Total indoor unit capacity code
MMY-MAP0501T8	MMY-MAP0501HT8	5	8	2.5 to 6.75
MMY-MAP0601T8	MMY-MAP0601HT8	6	10	3 to 8.1
MMY-MAP0801T8	MMY-MAP0801HT8	8	13	4 to 10.8
MMY-MAP1001T8	MMY-MAP1001HT8	10	16	5 to 13.5
MMY-MAP1201T8	MMY-MAP1201HT8	12	20	6 to 16.2
MMY-AP1401T8	MMY-AP1401HT8	14	23	7 to 18.9
MMY-AP1601T8	MMY-AP1601HT8	16	27	8 to 21.6
MMY-AP1801T8	MMY-AP1801HT8	18	30	9 to 24.3
MMY-AP2001T8	MMY-AP2001HT8	20	33	10 to 27.0
MMY-AP2201T8	MMY-AP2201HT8	22	37	11 to 29.7
MMY-AP2211T8	MMY-AP2211HT8	22	37	11 to 29.7
MMY-AP2401T8	MMY-AP2401HT8	24	40	12 to 32.4
MMY-AP2411T8	MMY-AP2411HT8	24	40	12 to 32.4
MMY-AP2601T8	MMY-AP2601HT8	26	43	13 to 35.1
MMY-AP2801T8	MMY-AP2801HT8	28	47	14 to 37.8
MMY-AP3001T8	MMY-AP3001HT8	30	48	15 to 40.5
MMY-AP3201T8	MMY-AP3201HT8	32	48	16 to 43.2
MMY-AP3211T8	MMY-AP3211HT8	32	48	16 to 43.2
MMY-AP3401T8	MMY-AP3401HT8	34	48	17 to 45.9
MMY-AP3411T8	MMY-AP3411HT8	34	48	17 to 45.9
MMY-AP3601T8	MMY-AP3601HT8	36	48	18 to 48.6
MMY-AP3611T8	MMY-AP3611HT8	36	48	18 to 48.6
MMY-AP3801T8	MMY-AP3801HT8	38	48	19 to 51.3
MMY-AP4001T8	MMY-AP4001HT8	40	48	20 to 54.0
MMY-AP4201T8	MMY-AP4201HT8	42	48	21 to 56.7
MMY-AP4401T8	MMY-AP4401HT8	44	48	22 to 59.4
MMY-AP4601T8	MMY-AP4601HT8	46	48	23 to 62.1
MMY-AP4801T8	MMY-AP4801HT8	48	48	24 to 64.8

50 to 135% of outdoor unit capacity

3. Cooling/heating capacity characteristics

Cooling capacity calculation method:
Required cooling capacity = cooling capacity x factor (①, ②, ③, ④, ⑤*1) kW

① Indoor air wet bulb temperature vs. capacity correction value

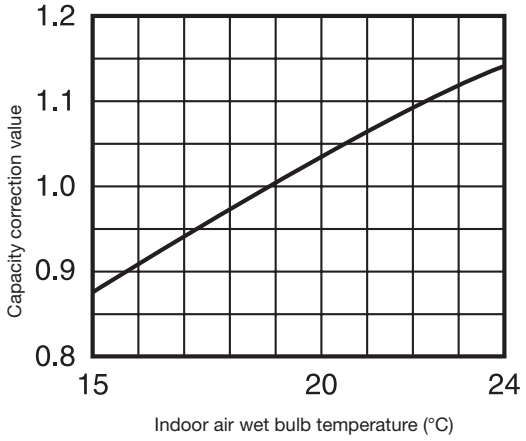

② Outdoor air dry bulb temperature vs. capacity correction value

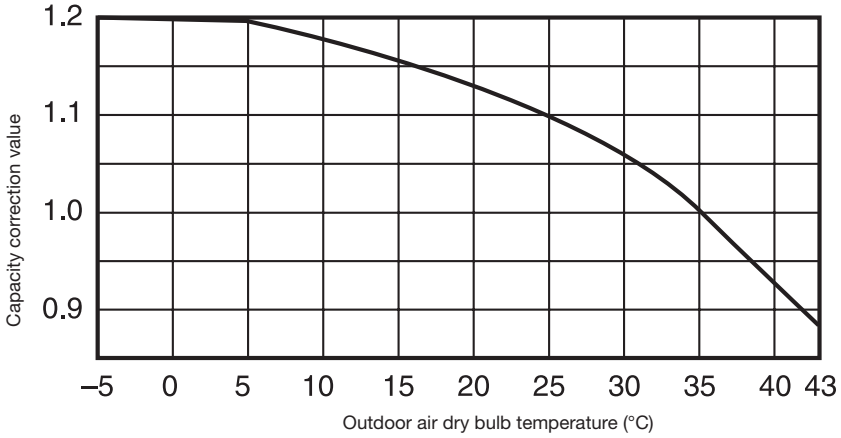

③ Air flow variation ratio of indoor unit vs. capacity correction (for ducted units only)

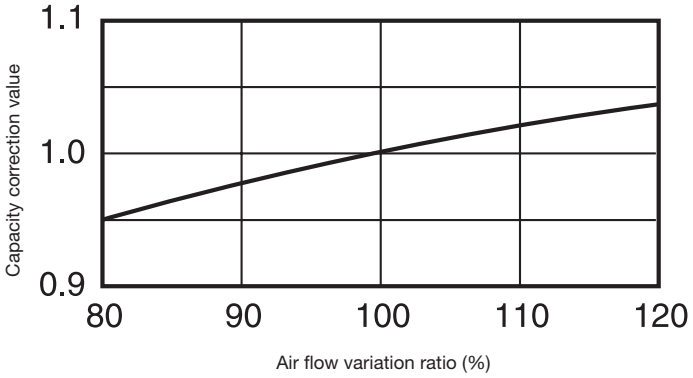

*1 Outdoor unit capacity correction factor when total capacity of the indoor units is not equal to the outdoor unit capacity.

④ Connecting pipe length and lift difference between indoor and outdoor units vs. capacity correction value

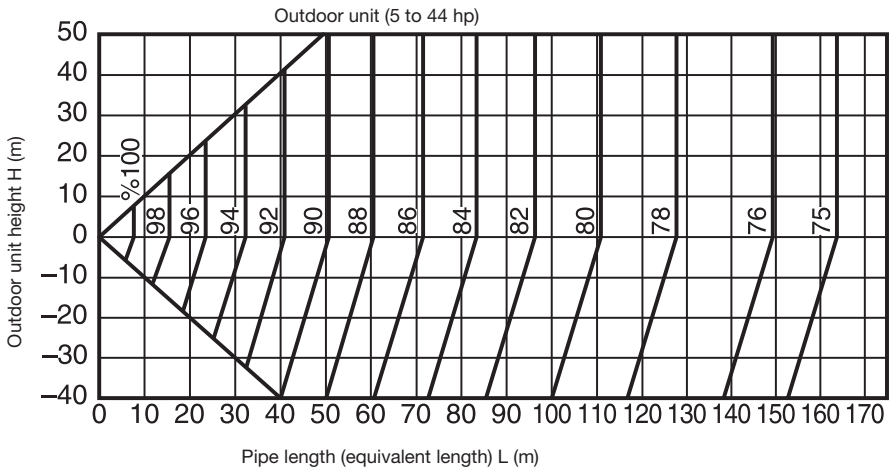

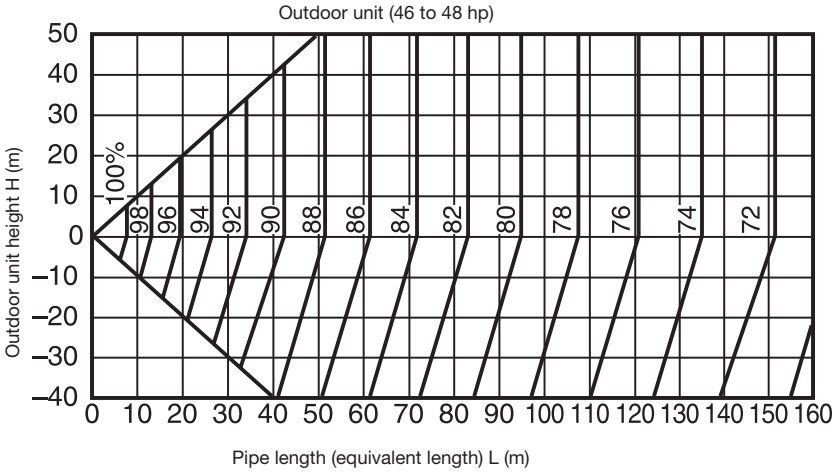

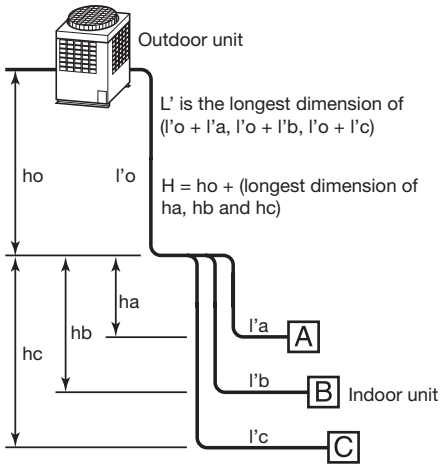

⑤ Correction of outdoor unit diversity

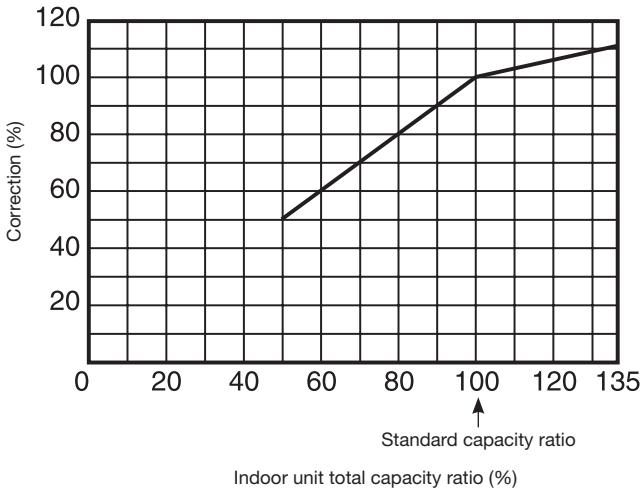

Heating capacity calculation method:
Required heating capacity = heating capacity x factor (①, ②, ③, ④, ⑤*1, ⑥*2) kW

① Indoor air dry bulb temperature vs. capacity correction value

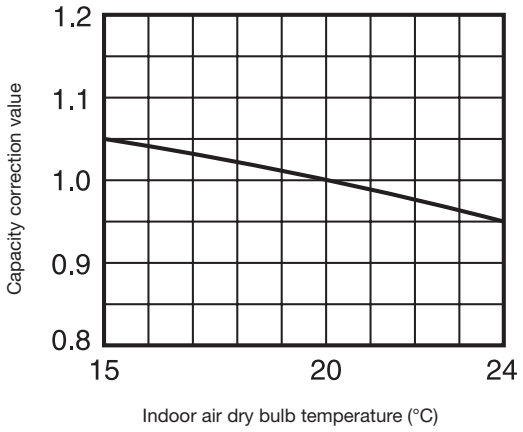

② Outdoor air wet bulb temperature vs. capacity correction value

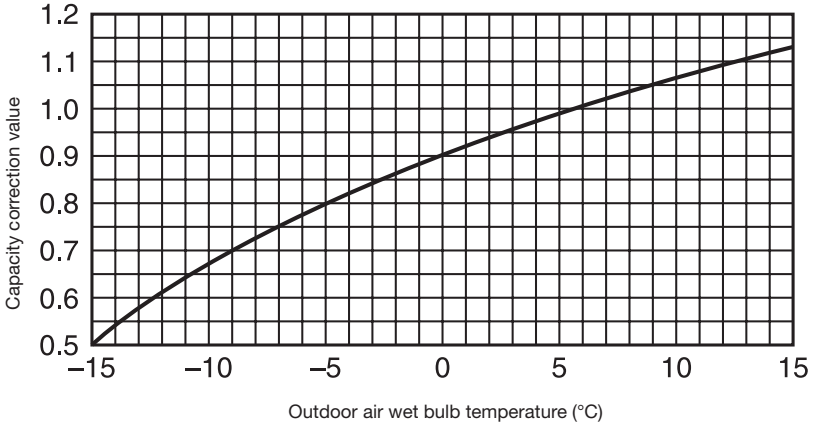

③ Air flow variation ratio of indoor unit vs. capacity correction (for ducted units only)

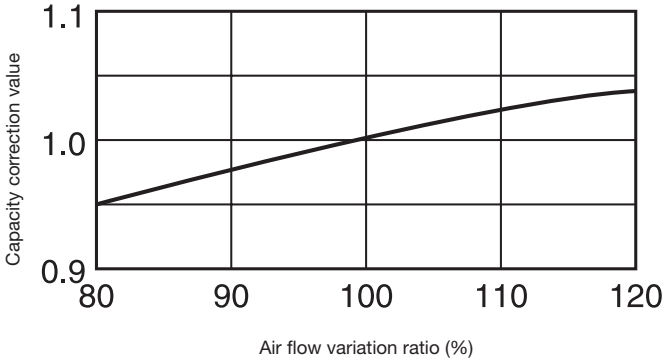

*1 Outdoor unit capacity correction factor when total capacity of the indoor units is not equal to the outdoor unit capacity.
*2 Refer to the capacity correction for frosting on the outdoor heat exchanger section on page 24.

④ Connecting pipe length and lift difference between indoor and outdoor units vs. capacity correction value

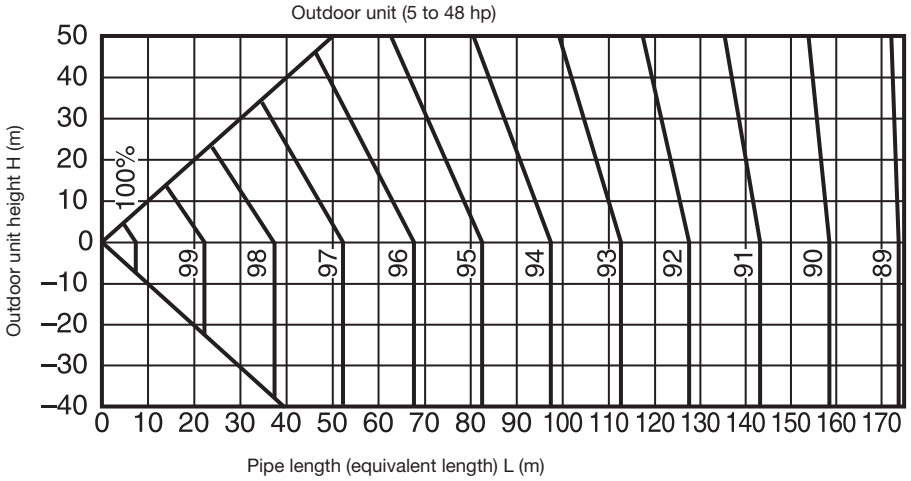

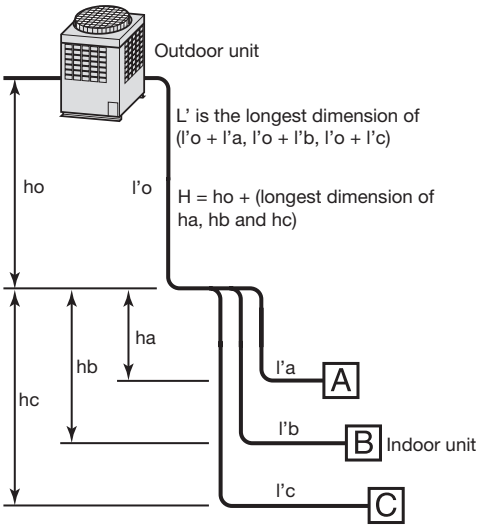

⑤ Correction of outdoor unit diversity

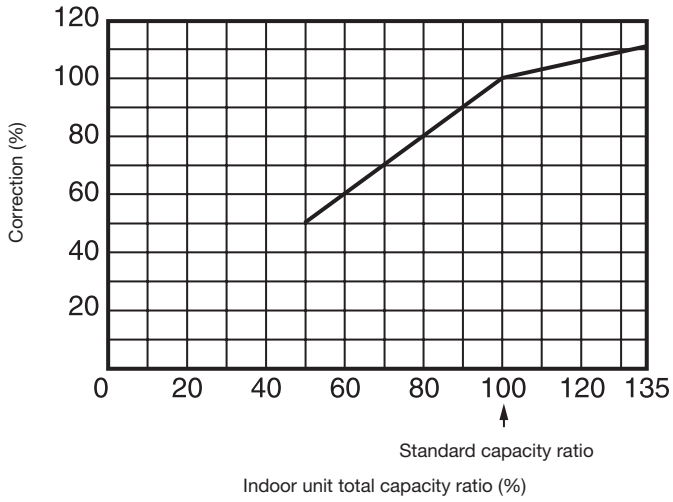

Capacity correction for frosting on the outdoor heat exchanger (heating mode)

Correct the heating capacity when frost was found on the outdoor heat exchanger.
Heating capacity = Capacity after correction of outdoor unit × correction value of capacity resulting from frost (Capacity after correction of outdoor unit: Heating capacity calculated in the previous section.)

⑥ Capacity correction for frosting on the outdoor heat exchanger

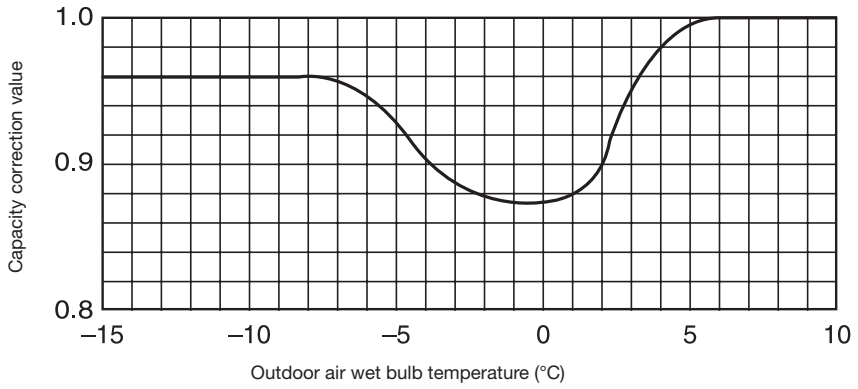

Capacity calculation for each indoor unit

Capacity for each indoor unit =

$$\text{Capacity after correction of outdoor unit} \times \frac{\text{Required standard capacity of indoor unit}}{\text{Total value of standard indoor unit capacity}}$$

Operating temperature range

In cooling mode

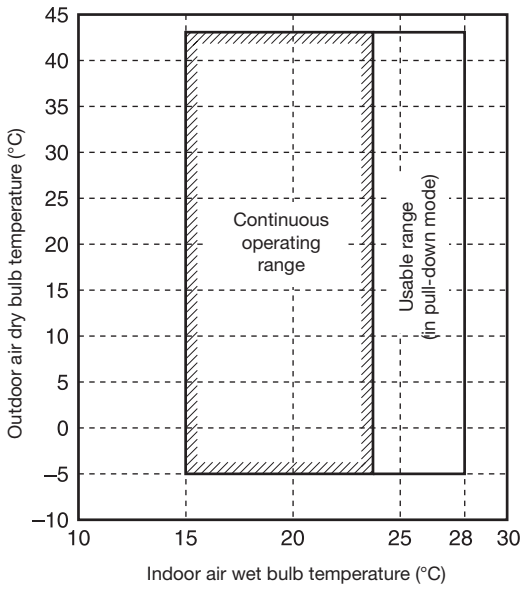

In heating mode

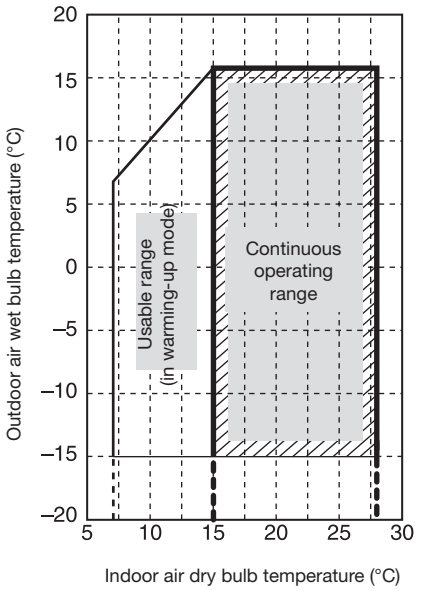

Rated conditions

Cooling: Indoor air temperature 27°C db/19°C wb.
Outdoor air temperature 35°C db.
Heating: Indoor air temperature 20°C db.
Outdoor air temperature 7°C db/6°C wb.

The unit can be operated even if outdoor temperature falls to -20°C. However, the warranty only covers operation down to -15°C, as lower temperatures are outside the operating range.

When the outdoor air temperature falls to below -15°C, unit operation may reduce the product life.

Example of equipment selection

The following shows an example of equipment selection based upon a building model.

Fig. 1 - Overview of building model

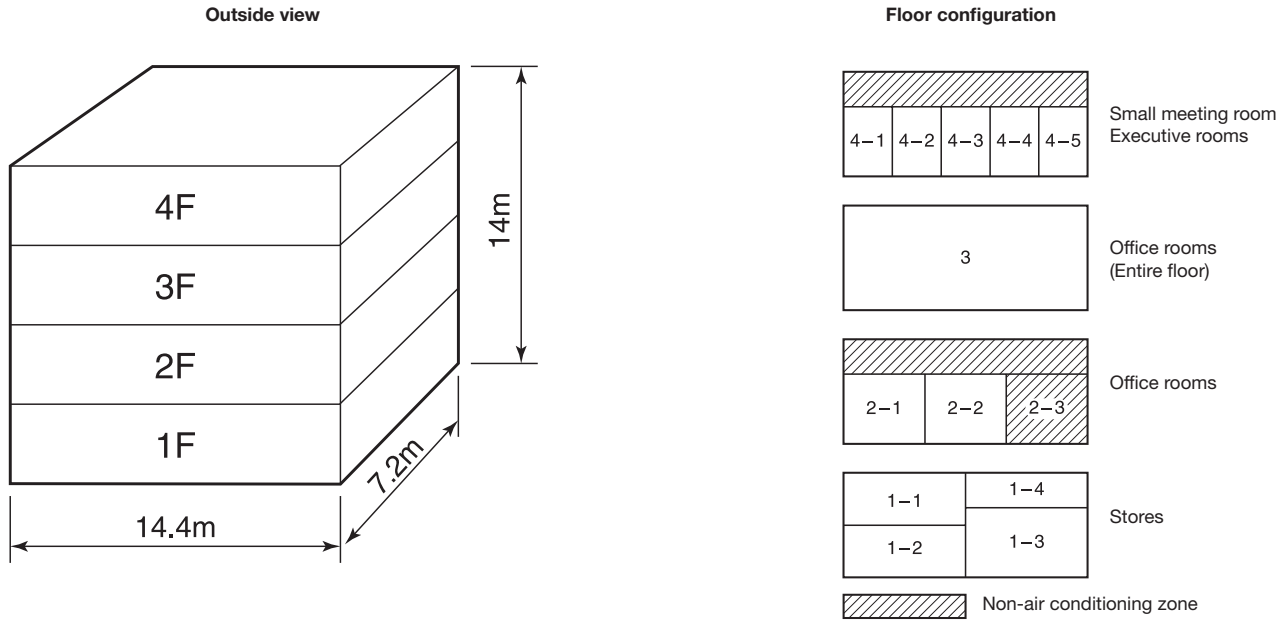

- Steel frame, reinforced concrete building, four floors above ground. Total floor area : 415 m²
  Outdoor unit is installed on the roof.
- Indoor design conditions:
  Cooling: 27.0/19.0°C db/wb. Heating: 20°C db
- Outdoor design conditions:
  Cooling: 35°C db (standard condition). Heating: 3°C wb (standard condition: 6°C wb)

Selection criteria for each floor

1F: Outdoor unit capacity exactly matches the total indoor unit capacity.
Total indoor unit hp = Outdoor unit hp Indoor: 2.5 hp x 2 units + 3.2 hp + 2 hp = 10.2 hp
Outdoor: 10 hp Same capacity

2F: Outdoor unit capacity matches the potential total indoor unit capacity with the possibility of future extension.
Office rooms 2 and 3 are to be used as warehouses at first, so air conditioning is not necessary at present. However, there is a plan to convert them into offices, so an outdoor module with extra capacity is required. Piping/wiring are carried out. Indoor unit is not yet installed.
When the rooms are used as an office later, the indoor unit is installed.

3F: One indoor unit is connected to one outdoor unit.
The outdoor module should have sufficient capacity to cover the peak demand of the indoor unit connected.

4F: Consider the diversity factor and have the outdoor module match 135% of indoor unit capacity.
This is a typical matching of indoor/outdoor units for a Super MMS system.
- Total indoor unit hp > Outdoor unit hp
- Select each indoor unit based on individual peak room load.
  Indoor: 2.5 hp + 2.5 hp + 2 hp + 2 hp (capacity difference in each room) + 1.3 hp =
  10.3 hp (different capacity) ⟷ Outdoor: 8 hp (different capacity)
- The cooling load profile needs to be taken into consideration.

Procedure and result of equipment selection

1. Procedure of equipment selection

a. Calculate cooling for every room.
b. Select an indoor unit to match the cooling load for every room from the table on page 10.
c. Select the outdoor module to match the indoor units selected in point b. Select the outdoor modules based on the critical factors and the combination rule. Choose a tentative outdoor module that will match the indoor units, and check whether the selection agrees with the combination rule. Perform the capacity correction based on the pipe length, system lift, indoor set temperature, outdoor temperature.
Then, make sure the corrected system cooling capacity satisfies the cooling load.

2. Equipment selection and capacity check

Air conditioning load				Equipment selection					
Floor	Room No.	Indoor air conditioning load (kW)		Indoor unit			Outdoor unit		
				Model	Capacity (kW)		Model	Capacity (kW)	
		Cooling	Heating	MMU-	Cooling	Heating	MMY	Cooling	Heating
4F	4-1	6.0 (16 o'clock)	5.4	AP0241H	7.1	8.0	AP2801HT8	78.5	88.0
	4-2	5.2 (14 o'clock)	4.2	AP0181H	5.6	6.3			
	4-3	5.0 (14 o'clock)	4.2	AP0181H	5.6	6.3			
	4-4	3.2 (12 o'clock)	2.7	AP0121H	3.6	4.0			
	4-5	6.4 (10 o'clock)	5.4	AP0241H	7.1	8.0			
3F	3-1	12.7	12.0	AP0481H	14.0	16.0			
2F	2-1	4.8	4.5	AP0181H	5.6	6.3			
	2-2	4.6	4.8	AP0181H	5.6	6.3			
	2-3	—	—	—	—	—			
1F	1-1	6.5	6.0	AP0241H	7.1	8.0			
	1-2	6.5	6.3	AP0241H	7.1	8.0			
	1-3	7.2	7.0	AP0301H	9.0	10.0			
	1-4	5.1	4.5	AP0181H	5.6	6.3			

Note: ( ): Peak occurrence time

Piping distance				Capacity correction		Capacity check after correction		
Floor	Room No.	Equivalent length (m)	Height difference (m)	Pipe correction x temp. correction		Capacity (kW)		Result
				Cooling	Heating	Cooling	Heating	
4F	4-1	43	12	0.920	0.957	6.5	6.9	Good
	4-2			x	x	5.2	5.4	
	4-3			1.0	1.0	5.2	5.4	
	4-4			x	x	3.3	3.5	
	4-5			1.0	0.95	6.5	6.9	
3F	3-1			=	x	12.9	13.8	
2F	2-1			0.920	0.95	5.2	5.4	
	2-2				=	5.2	5.4	
	2-3				0.864	—	—	
1F	1-1					6.5	6.9	
	1-2					6.5	6.9	
	1-3					8.3	8.6	
	1-4					5.2	5.4	

Example: Equipment selection based on system load profile

Since the five rooms on the 4th floor face different directions, their hourly cooling load profile will also be different. We select each indoor unit based on the individual room peak load. However, we need to use the total load profile on the 4th floor as a base to choose the outdoor module.

Load in each room

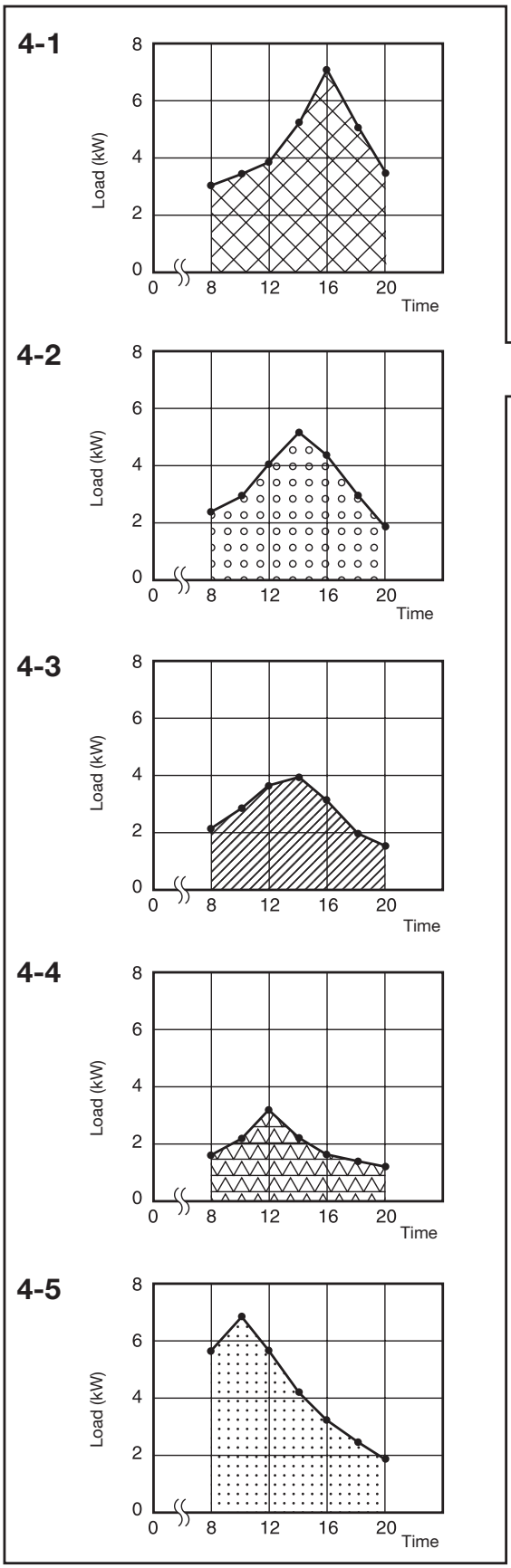

Total load in all rooms of 4th floor

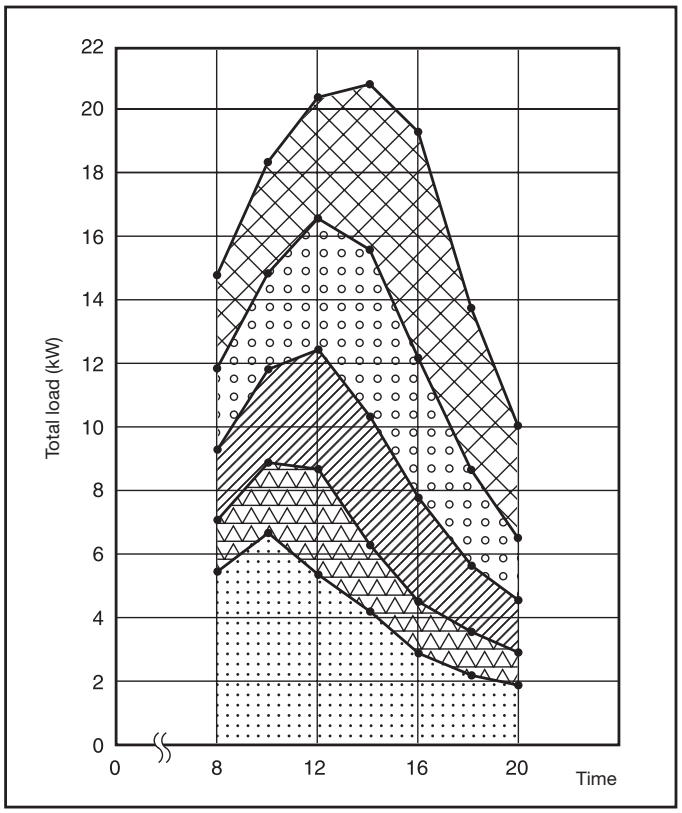

1. The total load on the 4th floor is calculated by adding up the hourly cooling loads of the five rooms.
2. The maximum value of the total load is used to select the outdoor module.

Schematic diagram

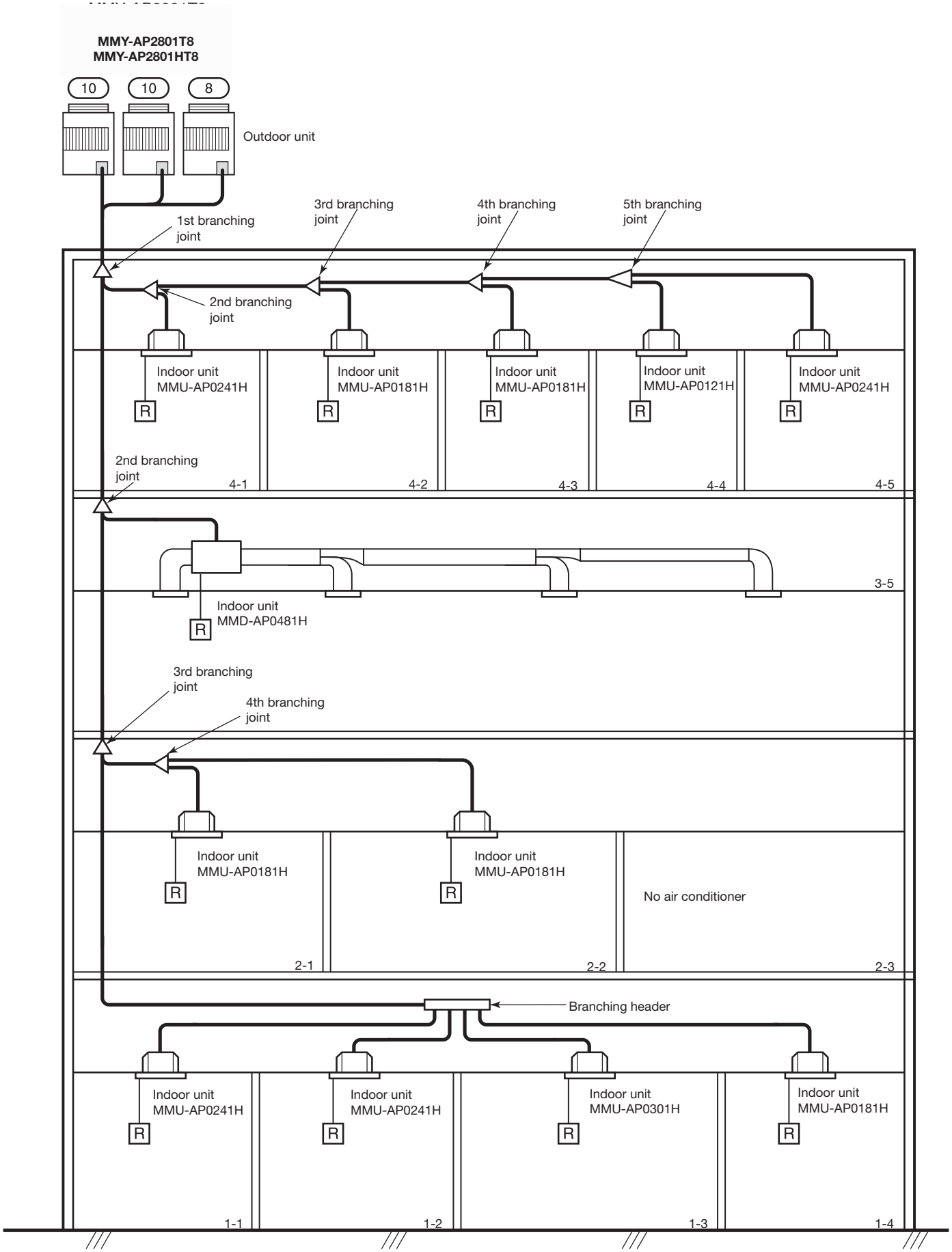

5. Refrigerant piping design

1. Warnings on refrigerant leakage

Check of concentration limit

The room in which the air conditioner is to be installed requires a design that ensures that the concentration of refrigerant gas will not exceed a set limit if there is a leak.

Refrigerant R-410A which is used in the air conditioner is safe, without the toxicity or combustibility of ammonia, and is not restricted by laws that protect the ozone layer. However, since it contains more than air, it poses the risk of suffocation if its concentration should rise excessively. Suffocation from leakage of R-410A is almost non-existent. With the recent increase in the number of high concentration buildings, however, the installation of multi air conditioner systems is on the increase because of the need for effective use of floor space, individual control, energy conservation by curtailing heat and carrying power, etc.

Most importantly, the multi air conditioner system is able to contain a large amount of refrigerant compared with conventional individual air conditioners. If a single unit of the multi air conditioner system is to be installed in a small room, select a suitable model and installation procedure so that if the refrigerant accidentally leaks out, its concentration does not reach the limit (and in the event of an emergency, measures can be made before injury can occur).

In a room where the concentration may exceed the limit, create an opening to adjacent rooms, or install mechanical ventilation combined with a gas leak detection device. The concentration is as given below.

$$\frac{\text{Total amount of refrigerant (kg)}}{\text{Min. volume of the indoor unit installed room (m}^3\text{)}} \leq \text{Concentration limit (kg/m}^3\text{)}$$

The concentration limit of R-410A which is used in multi air conditioners is 0.3 kg/m³.

Note 1: If there are 2 or more refrigeration systems in a single refrigeration device, the amounts of refrigerant should be as charged in each independent device.

For the amount of charge in this example:

- The possible amount of leaked refrigerant gas in rooms A, B and C is 10 kg.
- The possible amount of leaked refrigerant gas in rooms D, E and F is 15 kg.

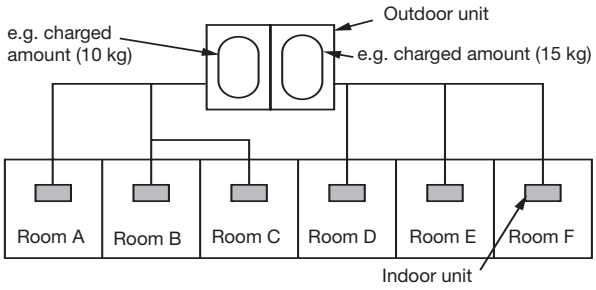

Note 2: The standards for minimum room volume are as follows:

(1) No partition (shaded portion)

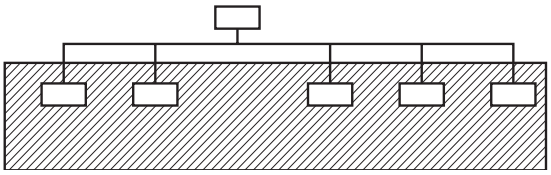

(2) When there is an effective opening with the adjacent room for ventilation of leaking refrigerant gas (opening without a door, or an opening 0.15% or larger than the respective floor spaces at the top or bottom of the door).

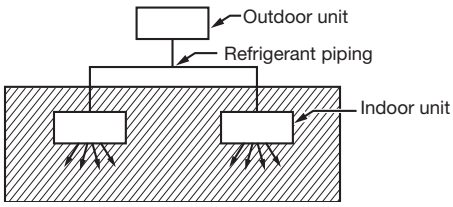

(3) If an indoor unit is installed in each partitioned room and the refrigerant piping is interconnected, the smallest room is the critical room. But when a mechanical ventilation device is installed in combination with a gas leak detector in the smallest room where the density limit is exceeded, the volume of the next smallest room is used.

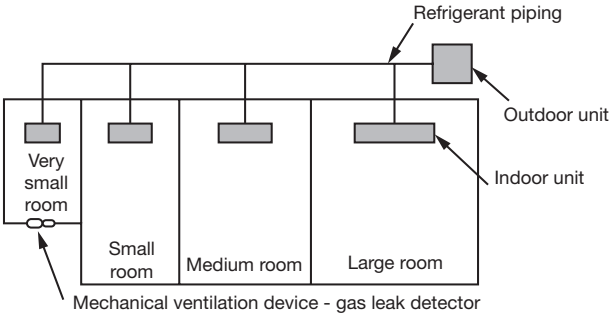

Note 3: The minimum indoor floor area compared with the amount of refrigerant is roughly as follows (when the ceiling is 2.7 m high):

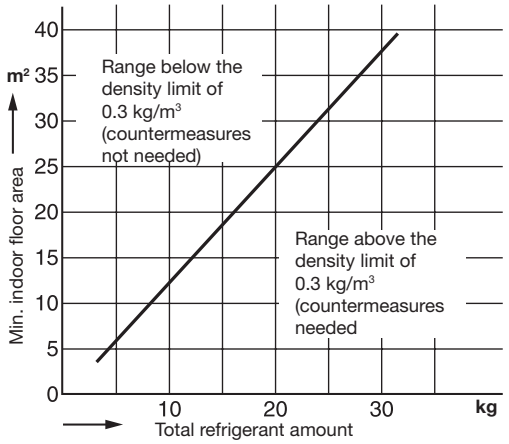

2. Free branching system

① Line branching system
② Header branching system
③ Header branching after line branching
④ Line branching after header branching
⑤ Header branching after header branching

The above five branching systems are available to increase significantly the flexibility of refrigerant piping design.

Line branching system

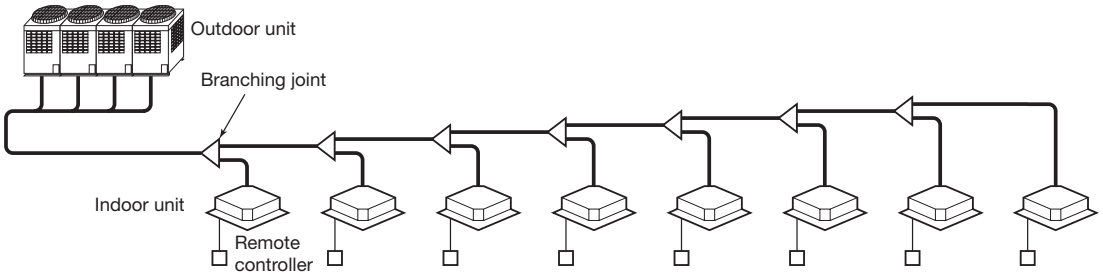

Header branching system

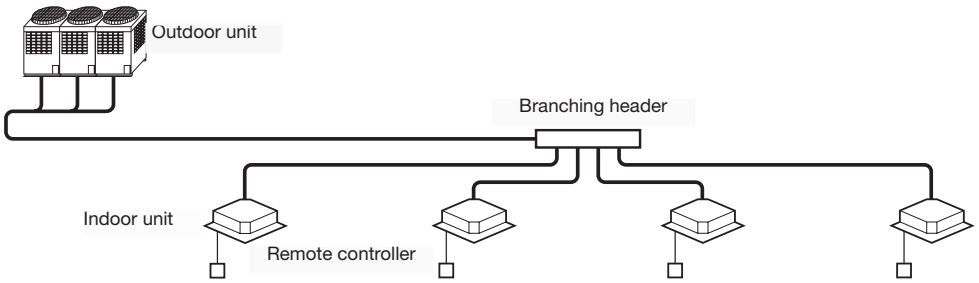

Header branching after line branching

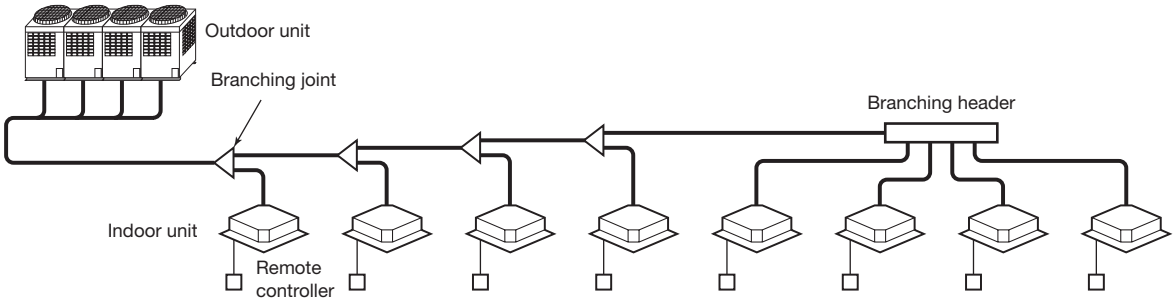

Line branching after header branching

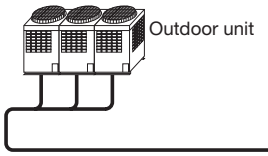

Header branching after header branching

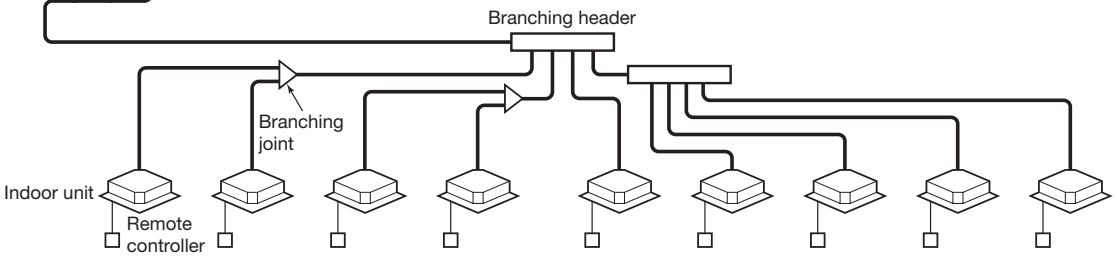

3. Allowable length/height difference of refrigerant piping

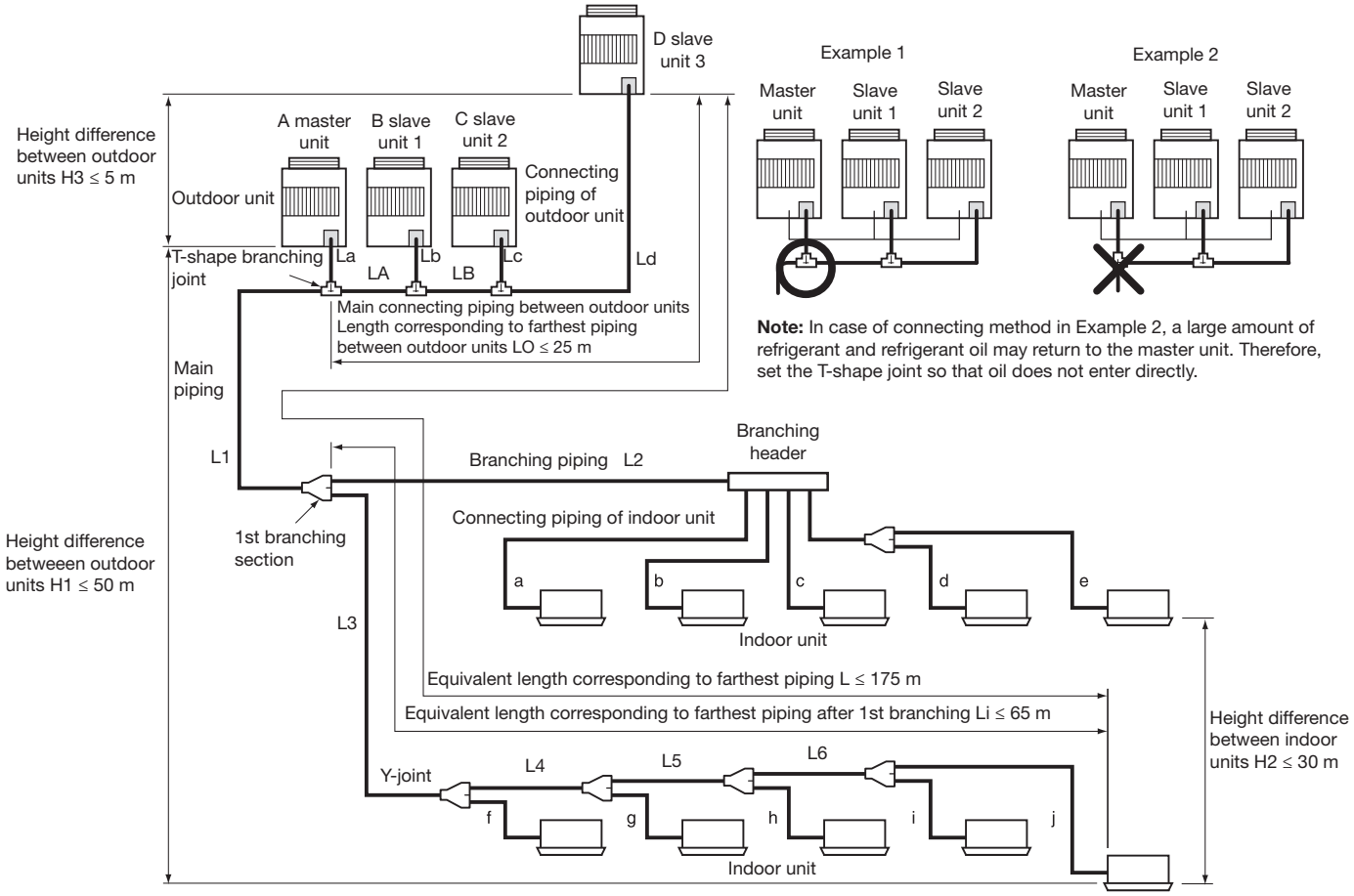

Note: In case of connecting method in Example 2, a large amount of refrigerant and refrigerant oil may return to the master unit. Therefore, set the T-shape joint so that oil does not enter directly.

System restrictions

Max. No. of combined outdoor units		4 units
Max. capacity of combined outdoor units		48 hp
Max. No. of connected indoor units		48 units
Max. capacity of combined indoor units	$H_2 \leq 15$	135%
	$H_2 > 15$	105%

Note 1: Combination of outdoor units: Master unit (1 unit) + slave units (0 to 3 units). Master unit is the outdoor unit nearest to the connected indoor units.

Note 2: Install the outdoor units in order of capacity. (Master unit ≥ slave unit 1 ≥ slave unit 2 ≥ slave unit 3)

Note 3: Refer to outdoor unit combination table on page 7.

Note 4: Piping to indoor units shall be perpendicular to piping to the master outdoor unit as in Example 1. Do not connect piping to indoor uints in the same direction as the master outdoor unit in Example 2.

Allowable length and height difference of refrigerant piping

			Allowable value	Piping section
Piping length	Total extension of pipe (liquid pipe, actual length)		300 m	LA + LB + La + Lb + Lc + Ld + L1 + L2 + L3 + L4+ L5 + L6 + L7 + a + b + c + d + e + f + g + h + i + j
	Farthest piping length L (*)	Actual length	150 m	LA + LB + Ld + L1 + L3 + L4 + L5 + L6 + j
		Equivalent length	175 m	
	Equivalent length of farthest piping from 1st branching Li (*)		65 m	L3 + L4 + L5 + L6 + j
	Equivalent length of farthest piping between outdoor units LO (*)		25 m	LA + LB + Ld, (LA + Lb, LA + LB + Lc)
	Max. equivalent length of main piping (***)		85 m	L1
	Max. equivalent length of outdoor unit connection piping		10 m	Ld, (La, Lb, Lc)
	Max. actual length of indoor unit connection piping		30 m	a, b, c, d, e, f, g, h, i, j
Height difference	Height between indoor and outdoor units H1	Upper outdoor unit	50 m	— —
		Lower outdoor unit	40 m (**)	— —
	Height between indoor units H2		30 m	— —
	Height between outdoor units H3		5 m	— —

* (D) is outdoor unit farthest from 1st branching, and (j) is indoor unit farthest from 1st branching.

** If the height difference (H2) between indoor units exceeds 3 m, set below 30 m.

*** If the maximum combination capacity of the outdoor units is 46 hp or more, the maximum equivalent length is restricted up to 70 m.

4. Selection of refrigerant piping

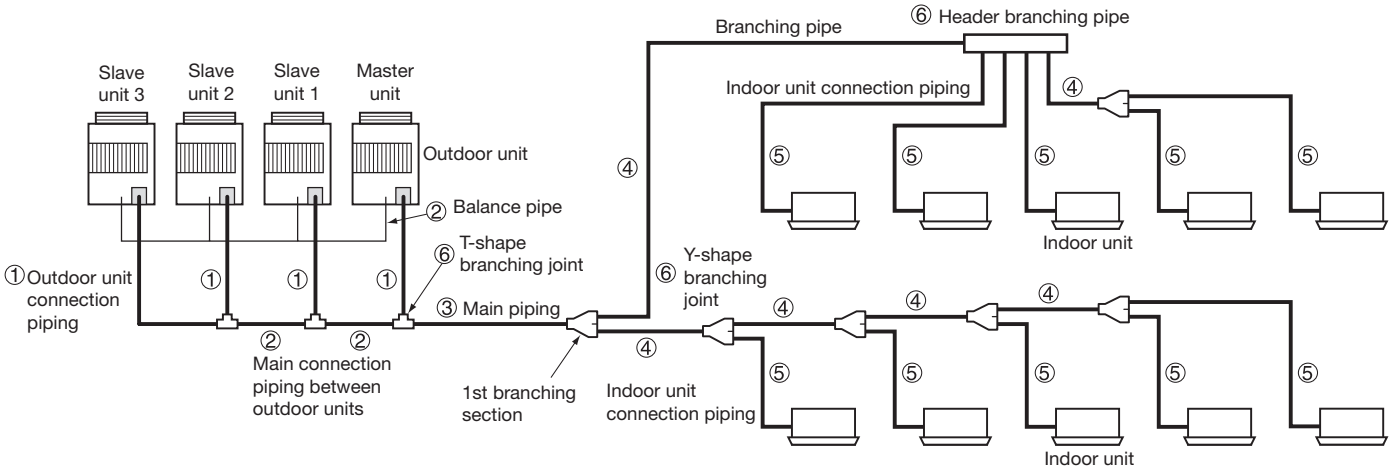

① **Pipe size of outdoor unit (Table 1)**

Model name	MMY-	Gas side	Liquid side
MAP0501T8	MAP0501HT8	Ø5/8”	Ø3/8”
MAP0601T8	MAP0601HT8	Ø3/4”	Ø3/8”
MAP0801T8	MAP0801HT8	Ø7/8”	Ø1/2”
MAP1001T8	MAP1001HT8	Ø7/8”	Ø1/2”
MAP1201T8	MAP1201HT8	Ø1-1/8”	Ø1/2”

② **Connecting pipe size between outdoor units (Table 2)**

Total capacity code of outdoor units downstream	Gas side	Liquid side	Balance pipe
14 to below 22	Ø1-1/8”	Ø5/8”	Ø3/8”
22 to below 26	Ø1-3/8”	Ø5/8”	Ø3/8”
26 to below 36	Ø1-3/8”	Ø3/4”	Ø3/8”
36 or more	Ø1-5/8”	Ø7/8”	Ø3/8”

③ **Size of main pipe (Table 3)**

Total capacity code of all outdoor units (*1)	Gas side	Liquid side
Below 6	Ø5/8”	Ø3/8”
6 to below 8	Ø3/4”	Ø3/8”
8 to below 12	Ø7/8”	Ø1/2”
12 to below 14	Ø1-1/8”	Ø1/2”
14 to below 22	Ø1-1/8”	Ø5/8”
22 to below 26	Ø1-3/8”	Ø5/8”
26 to below 36	Ø1-3/8”	Ø3/4”
36 to below 46	Ø1-5/8”	Ø7/8”
46 or more	Ø1-5/8” (*5)	Ø7/8”

Determine thickness of the main pipe according to capacity of the outdoor units.

④ **Pipe size between branching sections (Table 4)**

Total capacity code of indoor units downstream (*1)	Gas side	Liquid side
2.8 or less	Ø1/2”	Ø3/8”
2.8 to below 6.4	Ø5/8”	Ø3/8”
6.4 to below 12.2	Ø7/8”	Ø1/2”
12.2 to below 20.2	Ø1-1/8”	Ø5/8”
20.2 to below 25.2	Ø1-3/8”	Ø5/8”
25.2 to below 35.2	Ø1-3/8”	Ø3/4”
35.2 or more	Ø1-5/8”	Ø7/8”

If the total capacity code value of indoor units exceeds that of the outdoor units, apply the capacity code of the outdoor units.

⑤ **Piping of indoor unit (Table 5)**

Indoor unit size		Gas side	Liquid side
007 to 012	Actual length 15 m or less	Ø3/8”	Ø1/4”
	Actual length exceeds 15 m	Ø1/2”	Ø1/4”
015 to 018		Ø1/2”	Ø1/4”
024 to 056		Ø5/8”	Ø3/8”
072 to 096		Ø7/8”	Ø1/2”

⑥ **Selection of branching section (Table 6)**

	Total capacity code of indoor unit (*1)		Model
Y-shape branching joint (*2)		Below 6.4	RBM-BY53E
		6.4 to below 14.2	RBM-BY103E
		14.2 to below 25.2	RBM-BY203E
		25.2 or more	RBM-BY303E
Branching header (*3)	For 4 branching	Below 14.2	RBM-HY1043E
		14.2 to below 25.2	RBM-HY2043E
	For 8 branching	Below 14.2	RBM-HY1083E
		14.2 to below 25.2	RBM-HY2083E
T-shape branching joint (For connecting outdoor unit)	1 set of 3 types of T-shape joint pipes as described below: The required quantity is arranged and combined at the site. • Balance pipe (Corresponding difference Ø3/8”) × 1 • Piping at liquid side (Corresponding difference Ø3/8” to Ø7/8”) × 1 • Piping at gas side (Corresponding difference Ø5/8” to Ø1-5/8”) × 1		RBM-BT13E

⑦ **Minimum wall thickness for R-410A application (Table 7)**

Soft	Half hard or hard	OD (Inch)	Minimum wall thickness (mm)
OK	OK	1/4”	0.80
OK	OK	3/8”	0.80
OK	OK	1/2”	0.80
OK	OK	5/8”	1.00
NG	OK (*4)	3/4”	1.00
NG	OK (*4)	7/8”	1.00
NG	OK (*4)	1-1/8”	1.00
NG	OK (*4)	1-3/8”	1.10
NG	OK (*4)	1-5/8”	1.25

*1 Code is determined according to the unit size. For details, refer to pages 7-9.
*2 When using Y-shape branching joint for 1st branching, select according to capacity code of outdoor unit.
*3 For one line after header branching, indoor units with a maximum of 6.0 capacity code in total can be connected.
*4 If the pipe size is Ø3/4” or more, use a hard type or half hard type for material of the pipe.
*5 The maximum equivalent length of the main pipe should be 70 m or shorter.

5. Charging requirement with additional refrigerant

After the system has been evacuated, replace the vacuum pump with a refrigerant cylinder and charge the system with additional refrigerant.

Calculating the amount of additional refrigerant required

R410A

Refrigerant in the system when shipped from the factory

		5 hp	6 hp	8 hp	10 hp	12 hp
Factory refrigerant charge	**Heat pump**	8.5 kg	8.5 kg	12.5 kg	12.5 kg	12.5 kg
	Cooling only	8.0 kg	8.0 kg	11.0 kg	11.0 kg	11.0 kg

When the system is charged with refrigerant at the factory, the amount of refrigerant needed for the pipes at the site is not included. Calculate the additional amount needed, and add that amount to the system.

Calculation

Additional refrigerant charge amount is calculated from the size of the liquid pipe at the site and its actual length.

Additional refrigerant charge amount at the site =

Actual length of liquid pipe × Additional refrigerant charge amount per 1 m liquid pipe (Table 1) + Compensation by system hp (Table 2)

Example: Additional charge amount R (kg) = (L1 x 0.025 kg/m) + (L2 x 0.055 kg/m) + (L3 x 0.105 kg/m) + (3.0 kg)
L1: Actual total length of liquid pipe Ø1/4” (m)
L2: Actual total length of liquid pipe Ø3/8” (m)
L3: Actual total length of liquid pipe Ø1/2” (m)

Table 7-1

Liquid side pipe diameter	Ø1/4”	Ø3/8”	Ø1/2”	Ø5/8”	Ø3/4”	Ø7/8”
Additional refrigerant amount/1 m	0.025 kg	0.055 kg	0.105 kg	0.160 kg	0.250 kg	0.350 kg

Table 7-2

Combined horse power (hp)	**Outdoor unit combination (hp)**			**Compensation by system hp (kg)**
5	5			0.0
6	6			0.0
8	8			1.5
10	10			2.5
12	12			3.5
14	8	6		0.0
16	8	8		0.0
18	10	8		0.0
20	10	10		3.0
22	12	10		5.0
	8	8	6	0.0
24	12	12		7.0
	8	8	8	-4.0
26	10	8	8	-4.0

Combined horse power (hp)	**Outdoor unit combination (hp)**				**Compensation by system hp (kg)**
28	10	10	8		-2.0
30	10	10	10		0.0
32	12	10	10		1.0
	8	8	8	8	-6.0
34	12	12	10		3.0
	10	8	8	8	-6.0
36	12	12	12		4.0
	10	10	8	8	-6.0
38	10	10	10	8	-6.0
40	10	10	10	10	-5.0
42	12	10	10	10	-4.0
44	12	12	10	10	-2.0
46	12	12	12	10	0.0
48	12	12	12	12	2.0

6. Wiring design

1. General

(1) Perform wiring of the power supply in conformance with the regulations of the local electric company.
(2) For the control wires connecting indoor units, outdoor units, and between indoor and outdoor units, use of double-core shielded wires is recommended to prevent noise disturbance.
(3) Be sure to set the earth leakage breaker and the switches to the power supply section of the indoor unit.
(4) Supply power to each outdoor unit and provide an earth leakage breaker or hand switch for each outdoor unit.
(5) Never connect the 220–240 V power to the terminal block (U1, U2, U3, U4, U5, U6) for control cables, as this will cause problems.
(6) The control wiring system and refrigerant piping system should be in the same line.
(7) Arrange the cables so that the power cables do not come into contact with the high-temperature part of the pipe; otherwise the coating may melt and cause an accident.
(8) Do not turn on the power to the indoor unit until the refrigerant pipes have been completely evacuated.

2. Outdoor unit power supply

- Select the power supply cabling and fuse of each outdoor unit from the following specifications: 5-core cable, in accordance with 60245 IEC 66.
- Connect the outdoor units via the incorporated terminal block (L1, L2, L3, N).

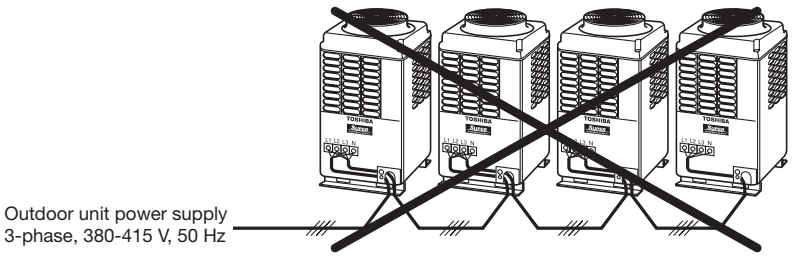

3. Electrical wiring design

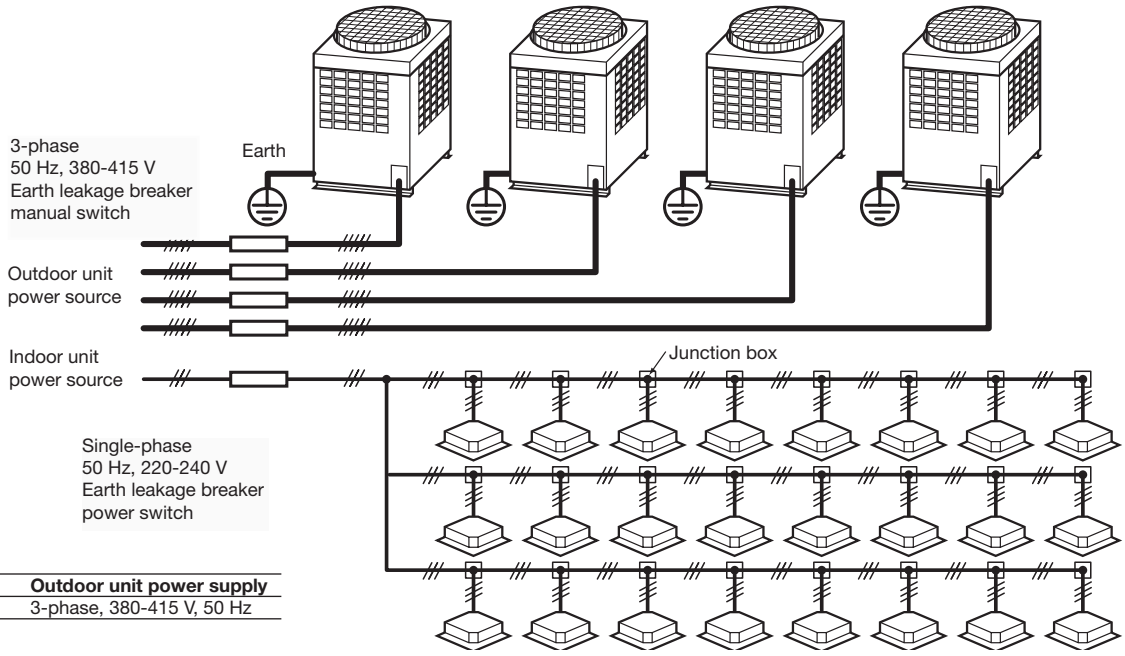

Model	Outdoor unit power supply
MMY-AP***T8, HT8	3-phase, 380-415 V, 50 Hz

Unit capacities and power supply wire sizes (reference)

Model MMY-		Power supply wiring Wire size	Field-supplied fuse
MAP0501T8	MAP0501HT8	3.5 mm² (AWG #12) Max. 26 m	20 A
MAP0601T8	MAP0601HT8	3.5 mm² (AWG #12) Max. 26 m	20 A
MAP0801T8	MAP0801HT8	3.5 mm² (AWG #10) Max. 20 m	30 A
MAP1001T8	MAP1001HT8	5.5 mm² (AWG #10) Max. 28 m	30 A
MAP1201T8	MAP1201HT8	5.5 mm² (AWG #10) Max. 27 m	30 A

- Determine the wire size for the indoor unit according to the number of connected indoor units downstream.
- Observe local regulations regarding wire size selection and installation.

4. Indoor unit power supply (must be independent from outdoor unit power)

Model	Power supply wiring Wire size		Field-supplied fuse
All models of indoor units	2.0 mm² (AWG #14) Max. 20 m	3.5 mm² (AWG #12) Max. 50 m	15 A

Note: The connecting length indicated in the table represents the length from the junction box to the outdoor unit when the indoor units are connected in parallel for power, as shown in the illustration on the previous page. A voltage drop of no more than 2% is assumed. If the connecting length exceeds the length indicated in the table, select the wire thickness in accordance with local wiring standards.

CAUTIONS

(1) Keep the refrigerant piping system and the indoor-indoor/indoor-outdoor control wiring systems together.

(2) When running power wires and control wires parallel to each other, either run them through separate conduits, or maintain a suitable distance between them.
(Current capacity of power wires: 10 A or less for 300 m, 50 A or less for 500 m)

5. Control wiring design

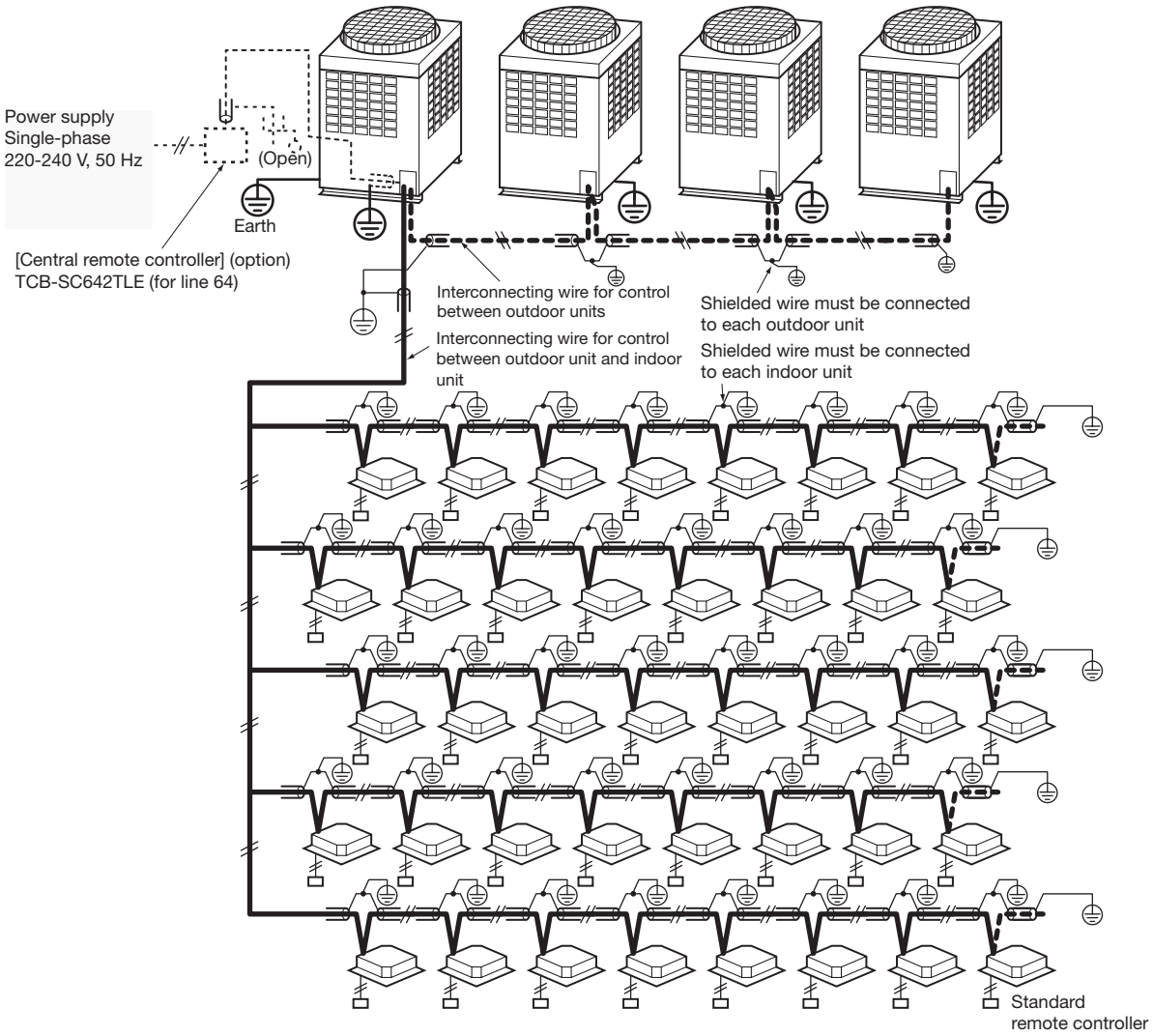

Wire specification, quantity, size of interconnecting wiring and remote controller wiring

Name	Quantity	Size			Specification
		Up to 500 m	Up to 1000 m	1000 to 2000 m	
Interconnecting wiring (indoor-indoor/indoor-outdoor/outdoor-outdoor control wiring, central control wiring)	2 cores	1.25 mm²		2.0 mm²	Shielded wire
Remote controller wiring	2 cores	0.5 to 2.0 mm²	-	-	-

(1) The interconnecting wiring and central control wiring use 2-core non-polarity interconnecting wires. Use 2-core shielded wires to prevent noise disturbance. In this case, close (connect) the end of shielded wires, and perform the functional grounding for the end of the shielded wires which are connected to both indoor and outdoor units. For the shielded wires which are connected between the central remote controller and the outdoor unit, perform the functional grounding at only one end of the central control wiring.

(2) Use 2-core non-polarity wire for remote controller (A, B terminals).
Use 2-core non-polarity wire for wiring of group control (A, B terminals).

6. Control wiring diagram

1. All control wiring is 2-core non-polarity wire.
2. Be sure to use shielded wire for the following wiring to prevent noise disturbance.
   - Outdoor-outdoor/indoor-indoor/outdoor-indoor control wiring, central control wiring.

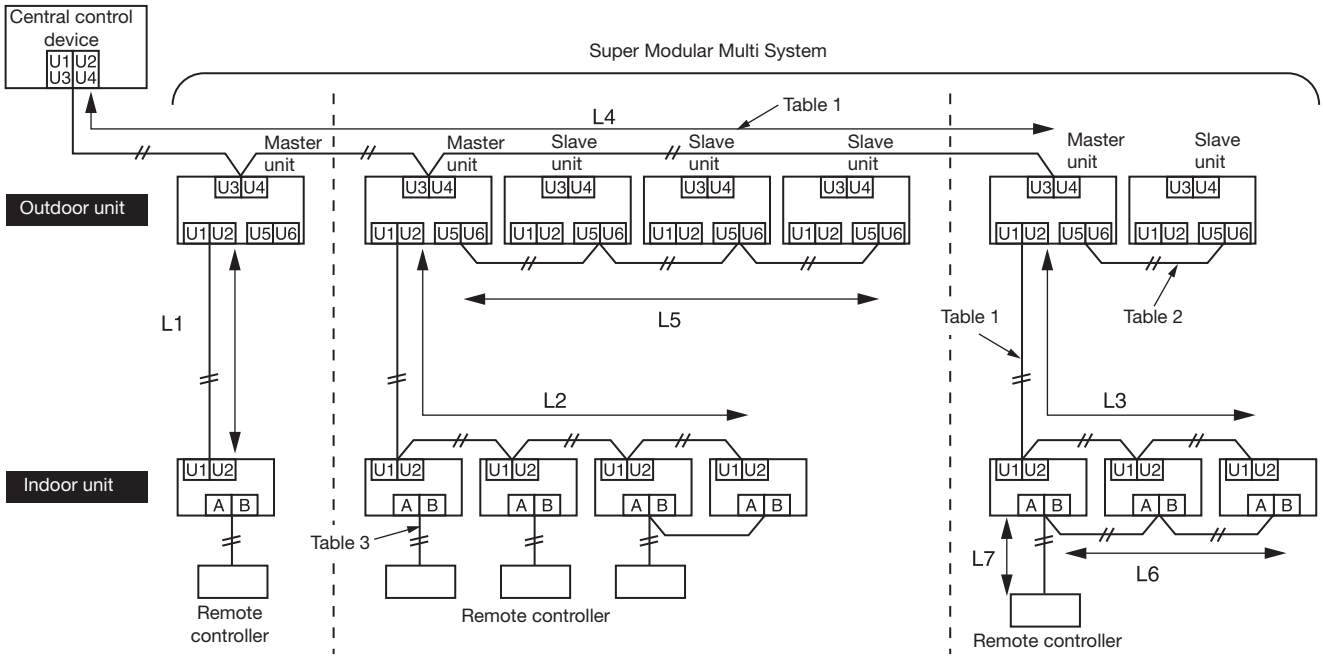

Table 1 Control wiring between indoor and outdoor units (L1, L2, L3)
Central control wiring (L4)

Wiring	2-core, non-polarity
Type	Shielded wire
Size	1.25 mm²: Up to 1000 m
Length	2.0 mm²: Up to 2000 m (*1)

(*1): Total of control wiring length for all refrigerant circuits (L1 + L2 + L3 + L4)

Table 2 Control wiring between outdoor units (L5)

Wiring	2-core, non-polarity
Type	Shielded wire
Size	1.25 mm² to 2.0 mm²
Length	Up to 100 m (L5)

Table 3 Remote controller wiring (L6, L7)

Wire	2-core
Size	0.5 mm² to 2.0 mm²
Length	• Up to 500 m (L6 + L7). • Up 400 m in case of wireless remote controller in group control. • Up to 200 m total length of control wiring between indoor units (L6).

7. Design

Type	Model	Nominal voltage (V-ph-Hz)	Voltage range Min.	Voltage range Max.	Fan motor kW	Fan motor FLA	Power supply MCA	Power supply MOCP
4-way ceiling cassette	MMU-AP0091H	230-1-50	198	264	0.060	0.20	0.25	15
	MMU-AP0121H	230-1-50	198	264	0.060	0.20	0.25	15
	MMU-AP0151H	230-1-50	198	264	0.060	0.22	0.28	15
	MMU-AP0181H	230-1-50	198	264	0.060	0.24	0.30	15
	MMU-AP0241H	230-1-50	198	264	0.060	0.28	0.35	15
	MMU-AP0271H	230-1-50	198	264	0.060	0.28	0.35	15
	MMU-AP0301H	230-1-50	198	264	0.060	0.40	0.50	15
	MMU-AP0361H	230-1-50	198	264	0.090	0.68	0.85	15
	MMU-AP0481H	230-1-50	198	264	0.090	0.93	1.16	15
	MMU-AP0561H	230-1-50	198	264	0.090	0.95	1.19	15
2-way ceiling cassette	MMU-AP0071WH	230-1-50	198	264	0.053	0.36	0.45	15
	MMU-AP0091WH	230-1-50	198	264	0.053	0.36	0.45	15
	MMU-AP0121WH	230-1-50	198	264	0.053	0.36	0.45	15
	MMU-AP0151WH	230-1-50	198	264	0.039	0.37	0.46	15
	MMU-AP0181WH	230-1-50	198	264	0.039	0.37	0.46	15
	MMU-AP0241WH	230-1-50	198	264	0.053	0.53	0.66	15
	MMU-AP0271WH	230-1-50	198	264	0.053	0.53	0.66	15
	MMU-AP0301WH	230-1-50	198	264	0.053	0.54	0.68	15
	MMU-AP0481WH	230-1-50	198	264	0.092	1.33	1.67	15
1-way ceiling cassette	MMU-AP0071YH	230-1-50	198	264	0.022	0.28	0.35	15
	MMU-AP0091YH	230-1-50	198	264	0.022	0.28	0.35	15
	MMU-AP0121YH	230-1-50	198	264	0.022	0.28	0.35	15
	MMU-AP0151SH	230-1-50	198	264	0.034	0.55	0.69	15
	MMU-AP0181SH	230-1-50	198	264	0.034	0.55	0.69	15
	MMU-AP0241SH	230-1-50	198	264	0.034	0.63	0.79	15
Standard ducted unit	MMD-AP0071BH	230-1-50	198	264	0.120	0.33	0.41	15
	MMD-AP0091BH	230-1-50	198	264	0.120	0.33	0.41	15
	MMD-AP0121BH	230-1-50	198	264	0.120	0.39	0.49	15
	MMD-AP0151BH	230-1-50	198	264	0.120	0.39	0.49	15
	MMD-AP0181BH	230-1-50	198	264	0.120	0.50	0.62	15
	MMD-AP0241BH	230-1-50	198	264	0.120	0.60	0.75	15
	MMD-AP0271BH	230-1-50	198	264	0.120	0.60	0.75	15
	MMD-AP0301BH	230-1-50	198	264	0.120	0.70	0.88	15
	MMD-AP0361BH	230-1-50	198	264	0.120	0.96	1.20	15
	MMD-AP0481BH	230-1-50	198	264	0.120	1.13	1.41	15
	MMD-AP0561BH	230-1-50	198	264	0.120	1.13	1.41	15
High-pressure ducted unit	MMD-AP0181H	230-1-50	198	264	0.160	0.93	1.16	15
	MMD-AP0241H	230-1-50	198	264	0.160	1.55	1.94	15
	MMD-AP0271H	230-1-50	198	264	0.160	1.55	1.94	15
	MMD-AP0361H	230-1-50	198	264	0.260	1.87	2.34	15
	MMD-AP0481H	230-1-50	198	264	0.260	2.12	2.65	15
	MMD-AP0721H	230-1-50	198	264	0.370 × 3	6.04	7.55	15
	MMD-AP0961H	230-1-50	198	264	0.370 × 3	6.35	7.94	15
Slim duct unit	MMD-AP0071SPH	230-1-50	198	264	0.060	0.35	0.44	15
	MMD-AP0091SPH	230-1-50	198	264	0.060	0.35	0.44	15
	MMD-AP0121SPH	230-1-50	198	264	0.060	0.37	0.47	15
	MMD-AP0151SPH	230-1-50	198	264	0.060	0.38	0.48	15
	MMD-AP0181SPH	230-1-50	198	264	0.060	0.47	0.59	15
Ceiling-suspended unit	MMC-AP0151H	230-1-50	198	264	0.030	0.33	0.41	15
	MMC-AP0181H	230-1-50	198	264	0.030	0.37	0.46	15
	MMC-AP0241H	230-1-50	198	264	0.040	0.48	0.60	15
	MMC-AP0271H	230-1-50	198	264	0.040	0.48	0.60	15
	MMC-AP0361H	230-1-50	198	264	0.080	0.90	1.13	15
	MMC-AP0481H	230-1-50	198	264	0.080	0.96	1.20	15
High-wall unit	MMK-AP0071H	230-1-50	198	264	0.030	0.35	0.44	15
	MMK-AP0091H	230-1-50	198	264	0.030	0.35	0.44	15
	MMK-AP0121H	230-1-50	198	264	0.030	0.35	0.44	15
	MMK-AP0151H	230-1-50	198	264	0.030	0.37	0.46	15
	MMK-AP0181H	230-1-50	198	264	0.030	0.37	0.46	15
	MMK-AP0241H	230-1-50	198	264	0.030	0.40	0.50	15
	MMK-AP0072H	230-1-50	198	264	0,030	0,20	0,24	15
	MMK-AP0092H	230-1-50	198	264	0,030	0,21	0,26	15
	MMK-AP0122H	230-1-50	198	264	0,030	0,22	0,27	15
Floor-mounted console unit	MML-AP0071H	230-1-50	198	264	0.045	0.30	0.37	15
	MML-AP0091H	230-1-50	198	264	0.045	0.30	0.37	15
	MML-AP0121H	230-1-50	198	264	0.045	0.49	0.62	15
	MML-AP0151H	230-1-50	198	264	0.045	0.49	0.62	15
	MML-AP0181H	230-1-50	198	264	0.070	0.54	0.68	15
	MML-AP0241H	230-1-50	198	264	0.070	0.54	0.68	15
Concealed chassis unit	MML-AP0071BH	230-1-50	198	264	0.019	0.29	0.36	15
	MML-AP0091BH	230-1-50	198	264	0.019	0.29	0.36	15
	MML-AP0121BH	230-1-50	198	264	0.019	0.29	0.36	15
	MML-AP0151BH	230-1-50	198	264	0.070	0.52	0.65	15
	MML-AP0181BH	230-1-50	198	264	0.070	0.52	0.65	15
	MML-AP0241BH	230-1-50	198	264	0.070	0.53	0.66	15
Floor-mounted cabinet unit	MMF-AP0151H	230-1-50	198	264	0.037	0.77	0.96	15
	MMF-AP0181H	230-1-50	198	264	0.037	0.77	0.96	15
	MMF-AP0241H	230-1-50	198	264	0.063	1.01	1.27	15
	MMF-AP0271H	230-1-50	198	264	0.063	1.01	1.27	15
	MMF-AP0361H	230-1-50	198	264	0.110	1.48	1.85	15
	MMF-AP0481H	230-1-50	198	264	0.160	1.84	2.30	15
	MMF-AP0561H	230-1-50	198	264	0.160	1.84	2.30	15

Legend
MCA Minimum circuit current, A
FLA Full load current, A
MOCP Maximum overcurrent protection current, A

Single outdoor unit

Heat pump MMY-	Cooling only MMY-	Nominal voltage (V-ph-Hz)	Voltage range Min.	Voltage range Max.	Compressor RLA	Fan motor kW	Fan motor FLA	Power supply MCA	Power supply MOCP
MAP0501HT8	MAP0501T8	400-3-50	342	457	4.0 + 4.0	0.60	0.8	16.5	20
MAP0601HT8	MAP0601T8	400-3-50	342	457	4.6 + 4.6	0.60	0.8	16.5	20
MAP0801HT8	MAP0801T8	400-3-50	342	457	5.2 + 5.2	0.60	1.0	20.0	30
MAP1001HT8	MAP1001T8	400-3-50	342	457	6.5 + 6.5	0.60	1.1	22.5	30
MAP1201HT8	MAP1201T8	400-3-50	342	457	9.5 + 9.5	0.60	1.1	24.5	30

Combination of outdoor units

Heat pump MMY-	Cooling only MMY-	Nominal voltage (V-ph-Hz	Voltage range Min.	Voltage range Max.	Compressor Unit No. 1 RLA	Compressor Unit No. 2 RLA	Compressor Unit No. 3 RLA	Compressor Unit No. 4 RLA	Fan motor kW	Fan motor FLA	Power supply MCA	Power supply MOCP
AP1401HT8	AP1401T8	400-3-50	342	457	5.2 + 5.2	4.6 + 4.6	—	—	0.6 × 2	1.0 + 0.8	36.5	40
AP1601HT8	AP1601T8	400-3-50	342	457	5.2 + 5.2	5.2 + 5.2	—	—	0.6 × 2	1.0 + 1.0	40.0	50
AP1801HT8	AP1801T8	400-3-50	342	457	6.5 + 6.5	5.2 + 5.2	—	—	0.6 × 2	1.0 + 1.1	42.5	50
AP2001HT8	AP2001T8	400-3-50	342	457	6.5 + 6.5	6.5 + 6.5	—	—	0.6 × 2	1.1 + 1.1	45.0	60
AP2201HT8	AP2201T8	400-3-50	342	457	5.2 + 5.2	5.2 + 5.2	4.6 + 4.6	—	0.6 × 3	1.0 + 1.0 + 0.8	56.5	70
AP2211HT8	AP2211T8	400-3-50	342	457	9.5 + 9.5	6.5 + 6.5	—	—	0.6 × 2	1.1 + 1.1	47.0	60
AP2401HT8	AP2401T8	400-3-50	342	457	5.2 + 5.2	5.2 + 5.2	5.2 + 5.2	—	0.6 × 3	1.0 + 1.0 + 1.0	60.0	70
AP2411HT8	AP2411T8	400-3-50	342	457	9.5 + 9.5	9.5 + 9.5	—	—	0.6 × 2	1.1 + 1.1	49.0	60
AP2601HT8	AP2601T8	400-3-50	342	457	6.5 + 6.5	5.2 + 5.2	5.2 + 5.2	—	0.6 × 3	1.1 + 1.1 + 1.0	62.5	70
AP2801HT8	AP2801T8	400-3-50	342	457	6.5 + 6.5	6.5 + 6.5	5.2 + 5.2	—	0.6 × 3	1.1 + 1.1 + 1.0	65.0	80
AP3001HT8	AP3001T8	400-3-50	342	457	6.5 + 6.5	6.5 + 6.5	6.5 + 6.5	—	0.6 × 3	1.1 + 1.1 + 1.1	67.5	80
AP3201HT8	AP3201T8	400-3-50	342	457	5.2 + 5.2	5.2 + 5.2	5.2 + 5.2	5.2 + 5.2	0.6 × 4	1.0 + 1.0 + 1.0 + 1.0	80.0	90
AP3211HT8	AP3211T8	400-3-50	342	457	9.5 + 9.5	6.5 + 6.5	6.5 + 6.5	—	0.6 × 3	1.1 + 1.1 + 1.1	69.5	80
AP3401HT8	AP3401T8	400-3-50	342	457	6.5 + 6.5	5.2 + 5.2	5.2 + 5.2	5.2 + 5.2	0.6 × 4	1.1 + 1.0 + 1.0 + 1.0	82.5	100
AP3411HT8	AP3411T8	400-3-50	342	457	9.5 + 9.5	9.5 + 9.5	6.5 + 6.5	—	0.6 × 3	1.1 + 1.1 + 1.1	71.5	80
AP3601HT8	AP3601T8	400-3-50	342	457	6.5 + 6.5	6.5 + 6.5	5.2 + 5.2	5.2 + 5.2	0.6 × 4	1.1 + 1.1 + 1.0 + 1.0	85.0	100
AP3611HT8	AP3611T8	400-3-50	342	457	9.5 + 9.5	9.5 + 9.5	9.5 + 9.5	—	0.6 × 3	1.1 + 1.1 + 1.1	73.5	90
AP3801HT8	AP3801T8	400-3-50	342	457	6.5 + 6.5	6.5 + 9.5	6.5 + 6.5	5.2 + 5.2	0.6 × 4	1.1 + 1.1 + 1.1 + 1.0	87.5	100
AP4001HT8	AP4001T8	400-3-50	342	457	6.5 + 6.5	6.5 + 6.5	6.5 + 6.5	6.5 + 6.5	0.6 × 4	1.1 + 1.1 + 1.1 + 1.1	90.0	100
AP4201HT8	AP4201T8	400-3-50	342	457	9.5 + 9.5	6.5 + 6.5	6.5 + 6.5	6.5 + 6.5	0.6 × 4	1.1 + 1.1 + 1.1 + 1.1	92.0	110
AP4401HT8	AP4401T8	400-3-50	342	457	9.5 + 9.5	9.5 + 9.5	6.5 + 6.5	6.5 + 6.5	0.6 × 4	1.1 + 1.1 + 1.1 + 1.1	94.0	110
AP4601HT8	AP4601T8	400-3-50	342	457	9.5 + 9.5	9.5 + 9.5	9.5 + 9.5	6.5 + 6.5	0.6 × 4	1.1 + 1.1 + 1.1 + 1.1	96.0	110
AP4801HT8	AP4801T8	400-3-50	342	457	9.5 + 9.5	9.5 + 9.5	9.5 + 9.5	9.5 + 9.5	0.6 × 4	1.1 + 1.1 + 1.1 + 1.1	98.0	110

Legend

MCA Minimum circuit current, A
FLA Full load current, A
MOCP Maximum overcurrent protection current, A
kW Rated fan motor output, kW
RLA Rated load current, A

Note: RLA is based on the following conditions:
Indoor temperature: 27°C db/19°C wb
Outdoor temperature: 35°C db

7. Controls

A range of controls to meet various system needs

As the size of the building increases so does the number of air conditioning units required. The multiple air conditioning system Super MMS ensures energy savings and comfort by allowing control of multiple units requiring different loads.

The Super MMS provides a range of functions to enable integrated, centralized control of multiple units. Design an optimal system that best suits the application and scale of your project.

1. Control via indoor remote controller

1-1. Remote contoller
Individual air conditioning units can be controlled remotely.
1-2. Group control
One remote controller can control a maximum of 8 indoor units in a group.
1-3. Two controlling positions
The units can be controlled from two locations using two remote controllers.
1-4. Weekly timer
The units can be run on a weekly schedule using a “remote controller with weekly timer”.

2. Control via the central remote controller

2-1. Central control + individual control
Up to 64 units can be controlled using the central remote controller and/or indoor remote controllers.
2-2. Weekly timer controller
The central remote controller can be connected to a weekly timer to set a weekly running schedule.
2-3. Control without indoor remote controller
The units can be operated from the central remote controller only, without the use of indoor remote controllers.
2-4. Central control with 1 to 1 models
Additionally, 1 to 1 models like the Digital Inverter or Super Digital Inverter can be joined into the Super MMS central control scheme.

3. Network control

The Super MMS control system can offer flexible centralized network control according to various customer requirements, for both open network building control in combination with other building apparatus such as elevator, fire alarm, lighting, etc., and also for stand-alone central air conditioning control.

These central control systems are mainly established by advanced local server platforms.

3-1. Open network control
Super MMS open network control is applicable for major global building management standards.
3-1-1. LONWORKS
The LONWORKS interface manages the Super MMS air conditioning system as a LON device to command a building computer message and to monitor the operating status.
3-1-2. BACnet
The local server serves air conditioning sub-system in a building control BACnet system.
3-2. Stand-alone central control
Simple exclusive air conditioning central control with less system integration work.
3-2-1. Touch-screen controller
A combination of touch-screen and local server enables easy operation and user-friendly display.
3-2-2. Windows-based plug-in central controller
The local server provides the central control function only by plug-in into a customer’s computer.

1. Applications for indoor remote controller

	Basic function	System diagram	Model
1-1	**Individual control** Air conditioner is individually operated at a distance.	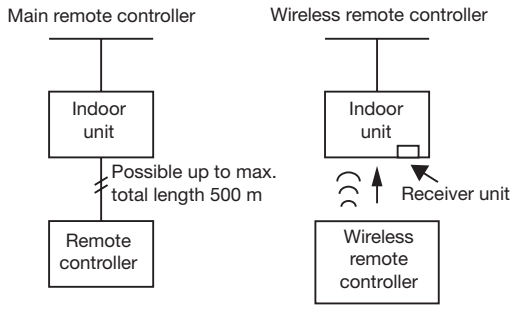	• Wired remote controller **RBC-AMT31E** • Simplified remote controller **RBC-AS21E** • Wireless remote controller kit **TCB-AX21U(W)-E** **RBC-AX22CE** **TCB-AX21E**
1-2	**GROUP control** One remote controller can control a group of max. 8 indoor units. Operating on the same setting.	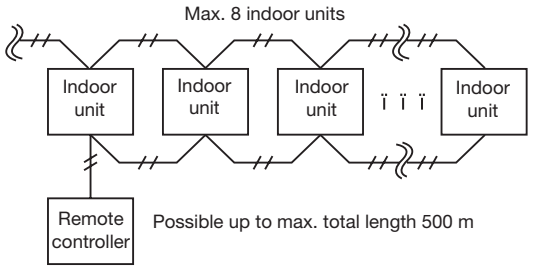	• Wired remote controller **RBC-AMT31E** • Simplified remote controller **RBC-AS21E**
1-3	**Two remote controllers** Air conditioner is controlled by two remote controller in two places.	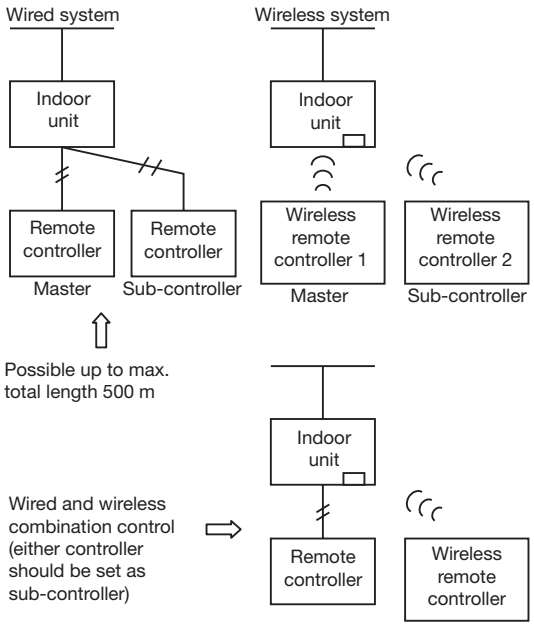	• Wired remote controller **RBC-AMT31E** • Simplified remote controller **RBC-AS21E** • Wireless remote controller kit **TCB-AX21U(W)-E** **RBC-AX22CE** **TCB-AX21E**
1-4	**Control by weekly timer** Weekly schedule operation.	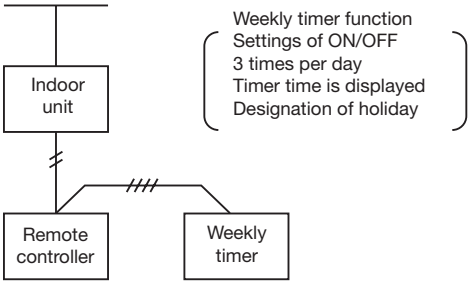	• Wired remote controller **RBC-AMT31E** + • Weekly timer **RBC-EXW21E**

2. Application controls for central remote controller

	Basic function	System diagram	Model
2-1	Central management controller for 64 units	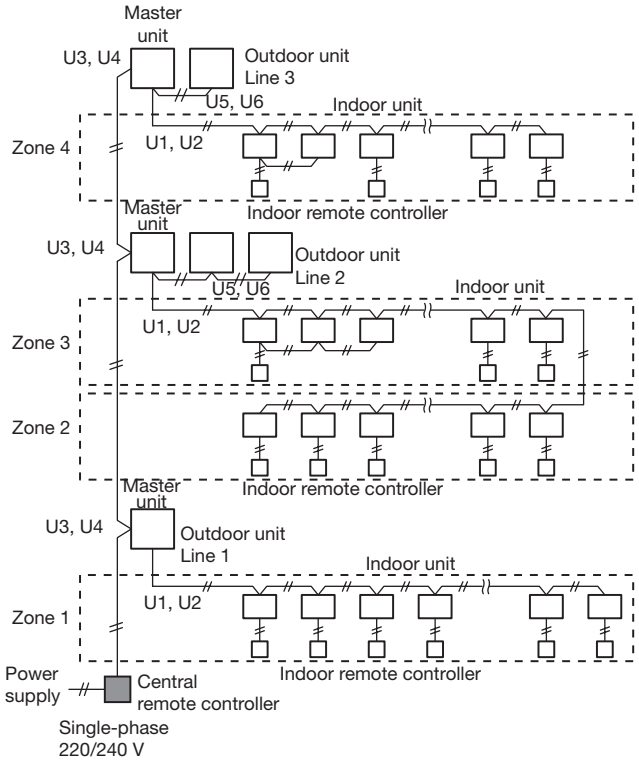 **Function of central remote controller** • Individual control of up to 64 indoor units. • Individual control for max. 64 indoor units divided into 1 to 4 zones (up to 16 indoor units for each zone). • Up to 16 outdoor master units are connectable. • 4 central control settings to inhibit individual operation by remote controller can be selected. • Setting for one of 1 to 4 zones is available. • Usable with other central control devices (up to 10 central control devices in one control circuit). • Choice of two control modes: central controller mode/remote controller mode. • Setting of simultaneous ON/OFF 3 times for each day of the week combined with weekly timer.	• Central remote controller **TCB-SC642TLE** **Indoor remote controller** • Wired remote controller **RBC-AMT31E** • Simplified remote controller **RBC-AS21E**
2-2	Central remote controller + weekly timer Weekly operation schedule can be set by connecting a weekly timer to the contral remoter controller.	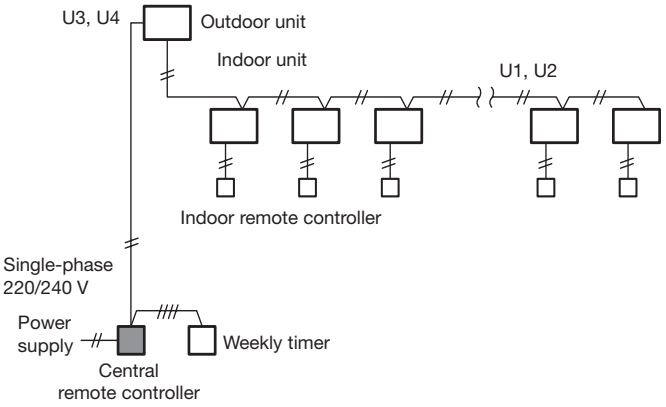	• Central remote controller **TCB-SC642TLE** + • Weekly timer **RBC-EXW21E** **Indoor remote controller** • Wired remote controller **RBC-AMT31E** or • Simplified remote controller **RBC-AS21E**

	Basic function	System diagram	Model
2-3	Remote central control without indoor remote controller	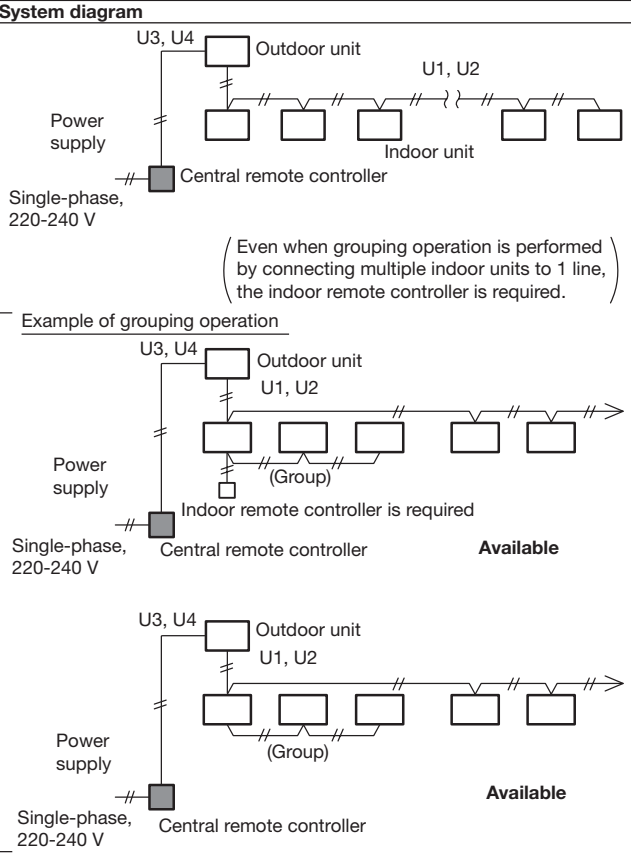	• Central remote controller **TCB-SC642TLE** **Indoor remote controller** • Wired remote controller **RBC-AMT31E**
2-4	Central management control with “1:1 model”	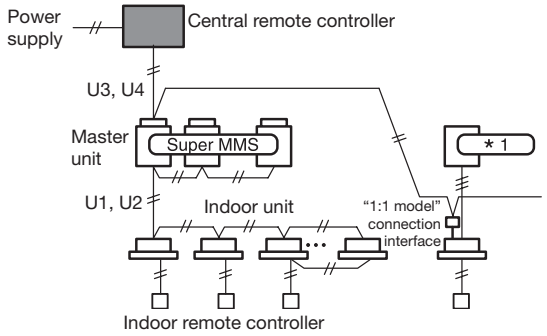 *1 Toshiba Digital Inverter System and Super Digital Inverter System	• Central remote controller **TCB-SC642TLE** • “1:1 model” connection interface interface **TCB-PCNT30TLE** RAV-SM560KRT-E, SM800KRT-E, are not available **Indoor remote controller** • Wired remote controller **RBC-AMT31E** • Simplified remote controller **RBC-AS21E**

3. Application control for network

	Basic function	System diagram	Model
3-1-1	LONWORKS	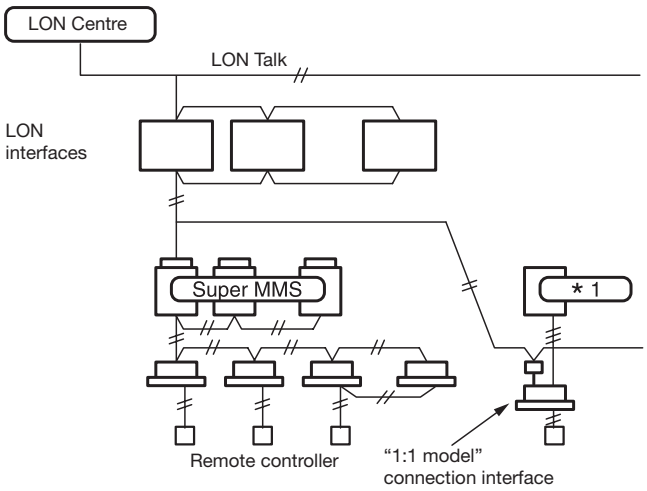 *1 Toshiba Digital Inverter System and Super Digital Inverter System The LONWORKS interface shall be connected between a building management computer and the Super MMS air conditioning system.	• LON Gateway **TCB-1FLN****** • "1:1 model" connection interface **TCB-PCNT30TLE** (RAV-SM560KRT-E, SM800KRT-E are not available) **Indoor remote controller** • Wired remote controller **RBC-AMT31E** or • Simplified remote controller **RBC-AS21E**
3-1-2	BACnet	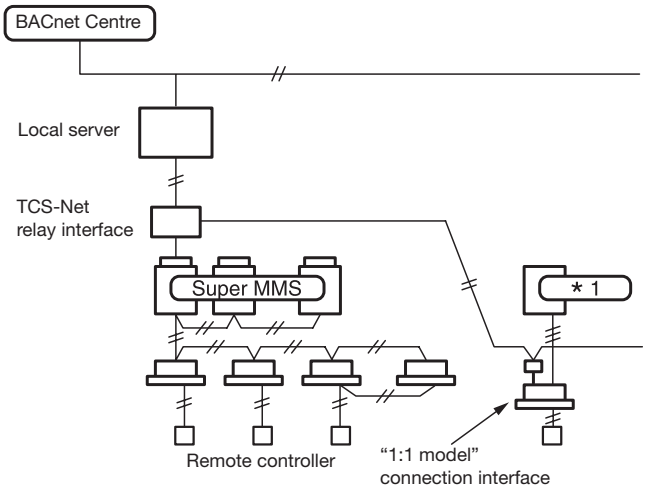 *1 Toshiba Digital Inverter System and Super Digital Inverter System The local server can be connected within the BACnet network, and can be connected to the Super MMS air conditioning system through the interface.	• BACnet local server **BMS-LSV******** • TCS-Net relay interface **BMS-1FLSV1E** • "1:1 model" connection interface **TCB-PCNT30TLE** (RAV-SM560KRT-E, SM800KRT-E are not available) **Indoor remote controller** • Wired remote controller **RBC-AMT31E** • Simplified remote controller **RBC-AS21E**

	Basic function	System diagram	Model
3-2-1	Touch screen controller	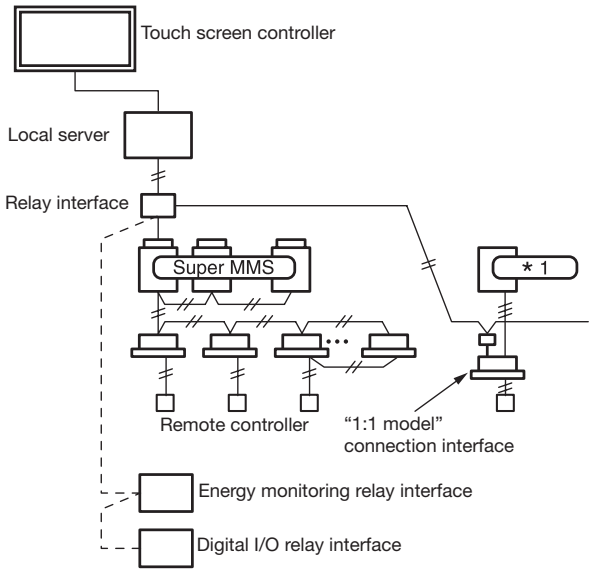 *1 Toshiba Digital Inverter System and Super Digital Inverter System Combination of touch screen and local server.	• Touch screen controller **BMS-TP5120ACE** • Intelligent server **BMS-LSV2E** **BMS-STC01E** • TCS-Net relay interface **BMS-1FLSV1E** • Energy monitoring relay interface **BMS-1FWH3E** • Digital I/O relay interface **BMS-1FDD01E** • "1:1 model" connection interface **TCB-PCNT30TLE** (RAV-SM560KRT-E, SM800KRT-E are not available) **Indoor remote controller** • Wired remote controller **RBC-AMT31E** • Simplified remote controller **RBC-AS21E**
3-2-2	Windows-based central controller	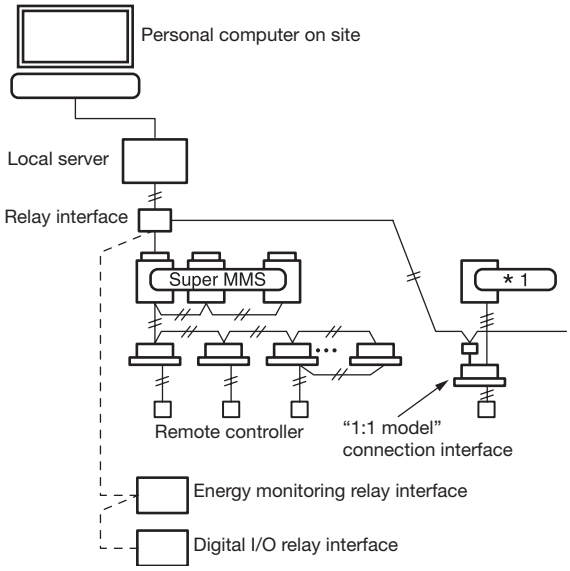 *1 Toshiba Digital Inverter System and Super Digital Inverter System The local server shall be a plug-in into a customer's personal computer.	• Windows-based central controller **BMS-LSV**** • TCS-Net relay interface **BMS-1FLSV1E** • Intelligent server **BMS-LSV2E** **BMS-STC01E** • Energy monitoring relay interface **BMS-1FWH3E** • Digital I/O relay interface **BMS-1FDD01E** • "1:1 model" connection interface **TCB-PCNT30TLE** (RAV-SM560KRT-E, SM800KRT-E are not available) **Indoor remote controller** • Wired remote controller **RBC-AMT31E** • Simplified remote controller **RBC-AS21E**

8. Accessories

Indoor unit accessories

Remote controller

Indoor unit type	Accessory name	Model	Applicable model
4-way ceiling cassette	Wired remote controller	RBC-AMT31E	Common parts for all model types
2-way ceiling cassette	Central remote controller	TCB-SC642TLE	
1-way ceiling cassette	Weekly timer	RBC-EXW21E	
Standard ducted unit	Simplified remote controller	RBC-AS21E	
High-pressure ducted unit	Wireless remote controller kit*1	TCB-AX21U(W)-E	4-way ceiling cassette
Slim duct unit			
Ceiling-suspended unit		RBC-AX22CE	Ceiling-suspended unit
High-wall unit (1 Series)			
High-wall unit (2 Series)			
Floor-mounted console unit			
Concealed chassis unit		TCB-AX21E	Universal type (except high-pressure ducted units)
Floor-mounted cabinet unit			

*1 For availability of the wireless remote controller kit, consult your dealer.

Panels

Indoor unit type		Accessory name	Model	Application model	Remarks
4-way ceiling cassette	Required accessory	Ceiling panel	RBC-U21PG(W)-E		
	Optional	Super long life filter	TCB-UF1601UE		
		High efficiency filter 65	TCB-UFM1601UE		
		High efficiency filter 90	TCB-UFH1601UE		
		Filter frame	TCB-DF21UKE		Needed for initial installation
		Fresh air and filter chamber	TCB-GFC1601UE		
		Fresh air inlet box	TCB-GB1601UE		Used with TCB-GFC1601UE
		Auxiliary fresh air flange	TCB-FF101URE		
		Spacer for height adjustment	TCB-SP1601UE		
			TCB-SP1601U-KW50E		
		Air discharge direction kit	TCB-BC1601UE		Three-piece kit
2-way ceiling cassette	Required accessory	Ceiling panel	RBC-UW136PG	AP0071-0121	
			RBC-UW266PG	AP0151-0301	
			RBC-UW466PG	AP0361-0561	
1-way ceiling cassette	Required accessory	Ceiling panel	RBC-US165PG	AP0151-0181	
			RBC-US265PG	AP0241	
			RBC-UY135PG	AP0071-0121	
Standard ducted unit	Optional	High efficiency filter 65	TCB-UFM11BFCE	AP0071-0121/AP0241-0301	AP0241-AP0301 two-piece kit
			TCB-UFM21BFCE	AP0151-0181/AP0361-0561	AP0361-AP0581 two-piece kit
			TCB-UFM11BE	AP0071-0121	
			TCB-UFM21BE	AP0151-0181	
			TCB-UFM31BE	AP0241-0301	
			TCB-UFM41BE	AP0361-0561	
		High efficiency filter 90	TCB-UFH51BFCE	AP0071-0121/AP0241-0301	AP0241-AP0301 two-piece kit
			TCB-UFH61BFCE	AP0151-0181/AP0361-0561	AP0361-AP0581 two-piece kit
			TCB-UFH51BE	AP0071-0121	
			TCB-UFH61BE	AP0151-0181	
			TCB-UFH71BE	AP0241-0301	
			TCB-UFH81BE	AP0361-0561	
		Ceiling panel	RBC-UD281PE(W)	AP0071-0121	
			RBC-UD501PE(W)	AP0151-0181	
			RBC-UD801PE(W)	AP0241-0301	
			RBC-UD1401PE(W)	AP0361-0561	
		Suction canvas	TCB-CA281BE	AP0071-0121	
			TCB-CA501BE	AP0151-0181	
			TCB-CA801BE	AP0241-0301	
			TCB-CA1401BE	AP0361-0561	
		Filter chamber	TCB-FC281BPE	AP0071-0121	
			TCB-FC501BPE	AP0151-0181	
			TCB-FC801BPE	AP0241-0301	
			TCB-FC1401BPE	AP0361-0561	
		Bottom filter kit	TCB-FK281BE	AP0071-0121	
			TCB-FK501BE	AP0151-0181	
			TCB-FK801BE	AP0241-0301	
			TCB-FK1401BE	AP0361-0561	
High-pressure ducted unit	Optional	High efficiency filter 65	TCB-UFM1D-1E	AP0181-0481	AP0481 two-piece kit
			TCB-UFM2D-1E	AP0241-0361	Two-piece kit
			TCB-UFM3DE	AP0721-0961	
		High efficiency filter 90	TCB-UFH5D-1E	AP0181-0481	AP0481 two-piece kit
			TCB-UFH6D-1E	AP0241-0361	Two-piece kit
			TCB-UFH7DE	AP0721-0961	
		Long life pre filter	TCB-PF1D-1E	AP0181-0481	AP0481 two-piece kit
			TCB-PF2D-1E	AP0241-0361	Two-piece kit
			TCB-PF3DE	AP0721-0961	
		Filter chamber	TCB-FCY21DE	AP0181	
			TCB-FCY31DE	AP0241-0361	
			TCB-FCY51DE	AP0481	
			TCB-FCY100DE	AP0721-0961	
		Drain pump kit	TCB-DP21DE	AP0181-0481	
			TCB-DP22DE	AP0721-0961	
Ceiling-suspended unit	Optional	Drain pump kit	TCB-DP22CE	AP0151-0481	* Required accessory when using drain pump kit
			TCB-KP12CE	AP0151-0181	
			TCB-KP22CE	AP0241-0481	

Note: For availability of the wireless remote controller kit and other optional equipment not in this table, consult your dealer.

9. Technical specifications

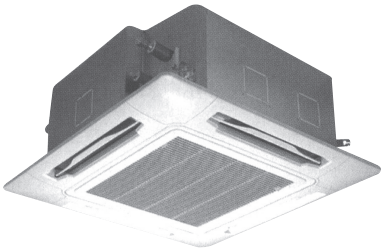

Indoor units

4-way ceiling cassettes

Model MMU-AP		0091H	0121H	0151H	0181H	0241H	0271H	0301H	0361H	0481H	0561H
Cooling capacity*	kW	2.8	3.6	4.5	5.6	7.1	8.0	9.0	11.2	14.0	16.0
Heating capacity	kW	3.2	4.0	5.0	6.3	8.0	9.0	10.0	12.5	16.0	18.0
Electrical data											
Power supply	V-ph-Hz	230-1-50 (voltage range 220-240 V) - power supply to indoor unit only									
Operating current	A	0.17	0.17	0.19	0.21	0.24	0.24	0.35	0.59	0.81	0.83
Power input	kW	0.020	0.020	0.022	0.026	0.032	0.032	0.048	0.070	0.110	0.112
Starting current	A	0.30	0.30	0.33	0.36	0.42	0.42	0.59	0.87	1.23	1.26
Unit appearance		Zinc hot dipping steel plate - heat insulating material attached									
Unit dimensions											
Height	mm	256	256	256	256	256	256	256	319	319	319
Width	mm	840	840	840	840	840	840	840	840	840	840
Depth	mm	840	840	840	840	840	840	840	840	840	840
Unit weight	kg	20	20	22	22	23	23	23	28	28	28
Heat exchanger		Finned tube									
Sound proofing/heat insulating material		Non-flammable insulation									
Fan type		Turbo fan									
Fan motor power input	W	60	60	60	60	60	60	60	90	90	90
Air flow											
High	l/s	222	222	258	292	333	333	367	467	567	581
Medium	l/s	203	203	231	256	256	256	308	361	397	422
Low	l/s	189	189	219	222	228	228	236	297	314	342
Air flow											
High	m^3/h	800	800	930	1050	1200	1200	1320	1680	2040	2090
Medium	m^3/h	730	730	830	920	920	920	1110	1300	1430	1520
Low	m^3/h	680	680	790	800	820	820	850	1070	1130	1230
Sound power level (high/medium/low)	dB(A)	43/42/40	43/42/40	44/42/40	45/42/41	47/44/41	47/44/41	50/46/43	53/49/46	57/51/47	58/53/47
Sound pressure level (high/medium/low)**	dB(A)	30/29/27	30/29/27	31/29/27	32/29/28	34/31/28	34/31/28	37/33/30	40/36/33	44/38/34	45/40/34
Air filter		Standard long-life filter supplied									
Controller		Remote controller									
Connection pipes											
Gas connection diameter	in	3/8	3/8	1/2	1/2	5/8	5/8	5/8	5/8	5/8	5/8
Liquid connection diameter	in	1/4	1/4	1/4	1/4	3/8	3/8	3/8	3/8	3/8	3/8
Drain connection, nom. dia (polyvinyl tube)	in	1	1	1	1	1	1	1	1	1	1
Ceiling panel model number		RBC-U21PG (W)-E									
Panel colour		Moon white (Munsell/2.5GY 9.0/0.5)									
Panel dimensions											
Height	mm	35	35	35	35	35	35	35	35	35	35
Width	mm	950	950	950	950	950	950	950	950	950	950
Depth	mm	950	950	950	950	950	950	950	950	950	950
Panel weight	kg	4.5	4.5	4.5	4.5	4.5	4.5	4.5	4.5	4.5	4.5

Rated conditions: Cooling: Indoor air temperature 27°C db/19°C wb, outdoor air temperature 35°C db
Heating: Indoor air temperature 20°C db, outdoor air temperature 7°C db/6°C wb

* Cooling capacities and electrical data are measured at the conditions specified by JIS B 8615, based on the reference piping which consists of 5 m of main piping and 2.5 m of branch piping connected with 0 metre height.

** The sound pressure level is measured in an anechoic chamber in accordance with JIS B 8616. Normally the values measured in the actual operating environment become larger than the indicated values due to the effects of external sound.

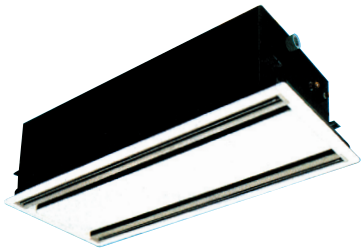

Indoor units

2-way ceiling cassettes

Model MMU-AP		0071WH	0091WH	0121WH	0151WH	0181WH	0241WH	0271WH	0301WH
Cooling capacity*	kW	2.2	2.8	3.6	4.5	5.6	7.1	8.0	9.0
Heating capacity	kW	2.5	3.2	4.0	5.0	6.3	8.0	9.0	10.0
Electrical data									
Power supply	V-ph-Hz	230-1-50 (voltage range 220-240 V) - power supply to indoor unit only							
Operating current	A	0.31	0.31	0.31	0.32	0.32	0.46	0.46	0.47
Power input	kW	0.070	0.070	0.070	0.072	0.072	0.105	0.105	0.106
Power factor	%	97	97	97	97	97	99	99	98
Starting current	A	0.47	0.47	0.47	0.60	0.60	0.89	0.89	0.98
Unit appearance		Zinc hot dipping steel plate - heat insulating material attached							
Unit dimensions									
Height	mm	398	398	398	398	398	398	398	398
Width	mm	830	830	830	1350	1350	1350	1350	1350
Depth	mm	550	550	550	550	550	550	550	550
Unit weight	kg	33	33	33	44	44	48	48	48
Heat exchanger		Finned tube							
Sound proofing/heat insulating material		Non-flammable insulation							
Fan type		Centrifugal fan							
Fan motor power input	W	53	53	53	39	39	53	53	53
Air flow									
High	l/s	158	158	158	217	217	317	317	350
Medium	l/s	142	142	142	195	195	267	267	317
Low	l/s	125	125	125	167	167	200	200	267
Air flow									
High	m^3/h	570	570	570	780	780	1140	1140	1260
Medium	m^3/h	510	510	510	700	700	960	960	1140
Low	m^3/h	450	450	450	600	600	720	720	960
Sound power level (high/medium/low)	dB(A)	47/45/43	47/45/43	47/45/43	48/46/43	48/46/43	51/48/46	51/48/46	53/50/47
Sound pressure level (high/medium/low)**	dB(A)	34/32/30	34/32/30	34/32/30	35/33/30	35/33/30	38/35/33	38/35/33	40/37/34
Air filter		Standard long-life filter supplied							
Controller		Remote controller							
Connection pipes									
Gas connection diameter	in	3/8	3/8	3/8	1/2	1/2	5/8	5/8	5/8
Liquid connection diameter	in	1/4	1/4	1/4	1/4	1/4	3/8	3/8	3/8
Drain connection, nom. dia (polyvinyl tube)	in	1	1	1	1	1	1	1	1
Ceiling panel model number		**RBC-UW136PG**			**RBC-UW266PG**				
Panel colour		Light ivory (Munsell 10Y 9/0.5)							
Panel dimensions									
Height	mm	8	8	8	8	8	8	8	8
Width	mm	1000	1000	1000	1520	1520	1520	1520	1520
Depth	mm	650	650	650	650	650	650	650	650
Panel weight	kg	8	8	8	11	11	11	11	11

Rated conditions: Cooling: Indoor air temperature 27°C db/19°C wb, outdoor air temperature 35°C db
Heating: Indoor air temperature 20°C db, outdoor air temperature 7°C db/6°C wb

* Cooling capacities and electrical data are measured at the conditions specified by JIS B 8615, based on the reference piping which consists of 5 m of main piping and 2.5 m of branch piping connected with 0 metre height.

** The sound pressure level is measured in an anechoic chamber in accordance with JIS B 8616. Normally the values measured in the actual operating environment become larger than the indicated values due to the effects of external sound.

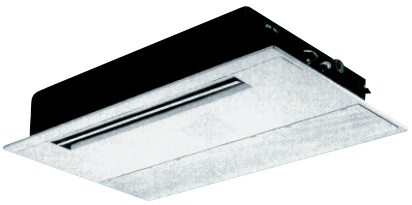

Indoor units

1-way ceiling cassettes

Model MMU-AP		0071YH	0091YH	0121YH	0151SH	0181SH	0241SH
Cooling capacity*	kW	2.2	2.8	3.6	4.5	5.6	7.1
Heating capacity	kW	2.5	3.2	4.0	5.0	6.3	8.0
Electrical data							
Power supply	V-ph-Hz	230-1-50 (voltage range 220-240 V) - power supply to indoor unit only					
Operating current	A	0.24	0.24	0.24	0.48	0.48	0.55
Power input	kW	0.053	0.053	0.053	0.103	0.103	0.115
Power factor	%	95	95	95	93	93	91
Starting current	A	0.60	0.60	0.60	0.80	0.80	1.10
Unit appearance		Zinc hot dipping steel plate - heat insulating material attached					
Unit dimensions							
Height	mm	235	235	235	198	198	198
Width	mm	850	850	850	1000	1000	1200
Depth	mm	400	400	400	655	655	655
Unit weight	kg	22	22	22	27	27	31
Heat exchanger		Finned tube					
Sound proofing/heat insulating material		Non-flammable insulation					
Fan type		Centrifugal fan					
Fan motor power input	W	22	22	22	34	34	34
Air flow							
High	l/s	150	150	150	217	217	333
Medium	l/s	133	133	133	200	200	317
Low	l/s	117	117	117	183	183	283
Air flow							
High	m^3/h	540	540	540	780	780	1200
Medium	m^3/h	480	480	480	720	720	1140
Low	m^3/h	420	420	420	660	660	1020
Sound power level (high/medium/low)	dB(A)	55/52/47	55/52/47	55/52/47	55/52/48	55/52/48	56/54/50
Sound pressure level (high/medium/low)**	dB(A)	42/39/34	42/39/34	42/39/34	42/39/35	42/39/35	43/41/37
Air filter		Standard long-life filter supplied					
Controller		Remote controller					
Room thermostat		Supplied					
Connection pipes							
Gas connection diameter	in	3/8	3/8	3/8	1/2	1/2	5/8
Liquid connection diameter	in	1/4	1/4	1/4	1/4	1/4	3/8
Drain connection, nom. dia (polyvinyl tube)	in	1	1	1	1	1	1
Ceiling panel model number		**RBC-UY135PG**			**RBC-US165PG**		**RBC-US265PG**
Panel colour		W: Silky shade (1Y8.5/0.5)					
Panel dimensions							
Height	mm	18	18	18	10	10	10
Width	mm	1050	1050	1050	1220	1220	1420
Depth	mm	470	470	470	755	755	755
Panel weight	kg	3.5	3.5	3.5	8.0	8.0	9.0

Rated conditions: Cooling: Indoor air temperature 27°C db/19°C wb, outdoor air temperature 35°C db
Heating: Indoor air temperature 20°C db, outdoor air temperature 7°C db/6°C wb

* Cooling capacities and electrical data are measured at the conditions specified by JIS B 8615, based on the reference piping which consists of 5 m of main piping and 2.5 m of branch piping connected with 0 metre height.

** The sound pressure level is measured in an anechoic chamber in accordance with JIS B 8616. Normally the values measured in the actual operating environment become larger than the indicated values due to the effects of external sound.

Indoor units

Standard ducted units

Model MMD-AP		0071BH	0091BH	0121BH	0151BH	0181BH	0241BH	0271BH	0301BH	0361BH	0481BH	0561BH
Cooling capacity*	kW	2.2	2.8	3.6	4.5	5.6	7.1	8.0	9.0	11.2	14.0	16.0
Heating capacity	kW	2.5	3.2	4.0	5.0	6.3	8.0	9.0	10.0	12.5	16.0	18.0
Electrical data												
Power supply	V-ph-Hz	230-1-50 (voltage range 220-240 V) - power supply to indoor unit only										
Operating current	A	0.29	0.29	0.34	0.34	0.43	0.52	0.52	0.61	0.83	0.98	0.98
Power input	kW	0.033	0.033	0.039	0.039	0.050	0.060	0.060	0.071	0.107	0.128	0.128
Starting current	A	0.50	0.50	0.59	0.59	0.75	0.90	0.90	1.05	1.44	1.70	1.70
Unit appearance		Zinc hot dipping steel plate										
Unit dimensions												
Height	mm	320	320	320	320	320	320	320	320	320	320	320
Width	mm	550	550	550	700	700	1000	1000	1000	1350	1350	1350
Depth	mm	800	800	800	800	800	800	800	800	800	800	800
Unit weight	kg	28	28	28	32	32	43	43	43	55	55	55
Heat exchanger		Finned tube										
Sound proofing/heat insulating material		Non-flammable insulation										
Fan type		Centrifugal fan										
Fan motor power input	W	120	120	120	120	120	120	120	120	120	120	120
Air flow												
High	l/s	133	133	158	181	217	317	317	350	450	550	550
Medium	l/s	117	117	136	150	183	275	275	300	392	475	475
Low	l/s	95	95	111	133	150	242	242	242	333	414	414
Air flow												
High	m^3/h	480	480	570	650	780	1140	1140	1260	1620	1980	1980
Medium	m^3/h	420	420	490	540	660	990	990	1080	1410	1710	1710
Low	m^3/h	340	340	400	480	540	870	870	870	1200	1490	1490
Static pressure (factory setting)	Pa	40	40	40	40	40	40	40	40	40	40	40
Static pressure (max.)	Pa	100	100	100	100	100	100	100	100	100	100	100
Sound power level (high/medium/low)	dB(A)	43/41/39	43/41/39	44/42/40	44/42/40	45/43/41	46/44/42	46/44/42	47/45/42	49/47/45	51/49/45	51/49/45
Sound pressure level (high/medium/low)**	dB(A)	30/28/26	30/28/26	31/29/27	31/29/27	32/30/28	33/31/29	33/31/29	34/32/29	36/34/32	38/36/32	38/36/32
Air filter		Standard long-life filter supplied										
Controller		Remote controller										
Connection pipes												
Gas connection diameter	in	3/8	3/8	3/8	1/2	1/2	5/8	5/8	5/8	5/8	5/8	5/8
Liquid connection diameter	in	1/4	1/4	1/4	1/4	1/4	3/8	3/8	3/8	3/8	3/8	3/8
Drain connection, nom. dia (polyvinyl tube)	in	1	1	1	1	1	1	1	1	1	1	1
Panel dimensions												
Height	mm	9	9	9	9	9	9	9	9	9	9	9
Width	mm	630	630	630	780	780	1080	1080	1080	1430	1430	1430
Depth	mm	500	500	500	500	500	500	500	500	500	500	500
Panel weight	kg	3.5	3.5	3.5	4.0	4.0	6.0	6.0	6.0	7.0	7.0	7.0

Rated conditions: Cooling: Indoor air temperature 27°C db/19°C wb, outdoor air temperature 35°C db
Heating: Indoor air temperature 20°C db, outdoor air temperature 7°C db/6°C wb

* Cooling capacities and electrical data are measured at the conditions specified by JIS B 8615, based on the reference piping which consists of 5 m of main piping and 2.5 m of branch piping connected with 0 metre height.

** The sound pressure level is measured in an anechoic chamber in accordance with JIS B 8616. Normally the values measured in the actual operating environment become larger than the indicated values due to the effects of external sound.

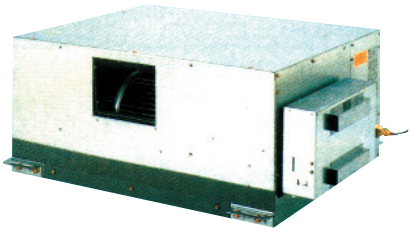

Indoor units

High-pressure ducted units

Model MMD-AP		0181H	0241H	0271H	0361H	0481H	0721H	0961H
Cooling capacity*	kW	5.6	7.1	8.0	11.2	14.0	22.4	28.0
Heating capacity	kW	6.3	8.0	9.0	12.5	16.0	25.0	31.5
Electrical data								
Power supply	V-ph-Hz	230-1-50 (voltage range 220-240 V) - power supply to indoor unit only						
Operating current	A	0.81	1.35	1.35	1.63	1.84	5.25	5.52
Power input	kW	0.184	0.299	0.299	0.368	0.414	1.200	1.260
Power factor	%	99	96	96	98	98	99	99
Starting current	A	1.3	3.5	3.5	4.1	4.8	13.6	14.8
Unit appearance		Zinc hot dipping steel plate						
Unit dimensions								
Height	mm	380	380	380	380	380	470	470
Width	mm	850	850	850	850	1200	1380	1380
Depth	mm	660	660	660	660	660	1250	1250
Unit weight	kg	50	52	52	56	67	150	150
Heat exchanger		Finned tube						
Sound proofing/heat insulating material		Non-flammable insulation						
Fan type		Centrifugal fan						
Fan motor power input	W	160	160	160	260	260	370 x 3	370 x 3
Air flow								
High	l/s	300	439	439	533	700	1200	1400
Medium	l/s	250	367	367	445	583	1000	1167
Low	l/s	200	295	295	356	467	800	933
Air flow								
High	m^3/h	1080	1580	1580	1920	2520	4320	5040
Medium	m^3/h	900	1320	1320	1600	2100	3600	4200
Low	m^3/h	720	1060	1060	1280	1680	2880	3360
Static pressure (factory setting)	Pa	137	137	137	137	137	137	137
Static pressure (low/medium/high)	Pa	68.6/137/196	68.6/137/196	68.6/137/196	68.6/137/196	68.6/137/196	68.6/137/196	68.6/137/196
Sound power level (high)	dB(A)	50	53	53	53	53	62	63
Sound pressure level (high/medium/low)**	dB(A)	37/35/33	40/38/36	40/38/36	40/38/36	40/38/36	49/47/45	50/48/46
Air filter		Optional or field-supplied						
Controller		Remote controller						
Connection pipes								
Gas connection diameter	in	1/2	5/8	5/8	5/8	5/8	7/8	7/8
Liquid connection diameter	in	1/4	3/8	3/8	3/8	3/8	1/2	1/2
Drain connection, nom. dia***	in	1	1	1	1	1	1	1

Rated conditions: Cooling: Indoor air temperature 27°C db/19°C wb, outdoor air temperature 35°C db
Heating: Indoor air temperature 20°C db, outdoor air temperature 7°C db/6°C wb

* Cooling capacities and electrical data are measured at the conditions specified by JIS B 8615, based on the reference piping which consists of 5 m of main piping and 2.5 m of branch piping connected with 0 metre height.

** The sound pressure level is measured in an anechoic chamber in accordance with JIS B 8616. Normally the values measured in the actual operating environment become larger than the indicated values due to the effects of external sound.

*** Male screw connection one side

Indoor units

Slim duct units

Model MMD-AP		0071SPH	0091SPH	0121SPH	0151SPH	0181SPH
Cooling capacity*	kW	2.2	2.8	3.6	4.5	5.6
Heating capacity	kW	2.5	3.2	4.0	5.0	6.3
Electrical data						
Power supply	V-ph-Hz	230-1-50 (voltage range 220-240 V) - power supply to indoor unit only				
Operating current	A	0.29	0.29	0.31	0.32	0.39
Power input	kW	0.039	0.039	0.043	0.045	0.054
Starting current	A	0.51	0.51	0.54	0.56	0.68
Unit appearance		Zinc hot dipping steel plate				
Unit dimensions						
Height	mm	210	210	210	210	210
Width	mm	845	845	845	845	845
Depth	mm	645	645	645	645	645
Unit weight	kg	22	22	22	23	23
Heat exchanger		Finned tube				
Sound proofing/heat insulating material		Polyethylene foam and polyurethane foam				
Fan type		Centrifugal fan				
Fan motor power input	W	60	60	60	60	60
Air flow						
High	l/s	150	150	167	192	217
Medium	l/s	131	131	145	167	189
Low	l/s	111	111	125	145	161
Air flow						
High	m^3/h	540	540	600	690	780
Medium	m^3/h	470	470	520	600	680
Low	m^3/h	400	400	450	520	580
Static pressure (factory setting)	Pa	6	6	5	5	4
Static pressure (max.)	Pa	-16/-31/-46	-16/-31/-46	-15/-30/-45	-15/-30/-45	-14/-29/-44
Air filter pressure loss	Pa	4	4	5	5	6
Lower air inlet						
Sound power level (high/medium/low)	dB(A)	49/46/43	49/46/43	51/48/45	52/49/46	53/51/49
Sound pressure level (high/medium/low)**	dB(A)	36/33/30	36/33/30	38/35/32	39/36/33	40/38/36
Rear air inlet						
Sound power level (high/medium/low)	dB(A)	41/39/37	41/39/37	42/40/38	45/43/41	46/44/42
Sound pressure level (high/medium/low)**	dB(A)	28/26/24	28/26/24	29/27/25	32/30/28	33/31/29
Air filter		Standard long-life filter supplied				
Controller		Remote controller				
Connection pipes						
Gas connection diameter	in	3/8	3/8	3/8	1/2	1/2
Liquid connection diameter	in	1/4	1/4	1/4	1/4	1/4
Drain connection, nom. dia (polyvinyl tube)	in	1	1	1	1	1

Rated conditions: Cooling: Indoor air temperature 27°C db/19°C wb, outdoor air temperature 35°C db
Heating: Indoor air temperature 20°C db, outdoor air temperature 7°C db/6°C wb

* Cooling capacities and electrical data are measured at the conditions specified by JIS B 8615, based on the reference piping which consists of 5 m of main piping and 2.5 m of branch piping connected with 0 metre height.

** The sound pressure level is measured in an anechoic chamber in accordance with JIS B 8616. Normally the values measured in the actual operating environment become larger than the indicated values due to the effects of external sound.

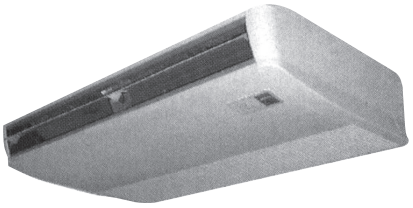

Indoor units

Ceiling-suspended units

Model MMC-AP		0151H	0181H	0241H	0271H	0361H	0481H
Cooling capacity*	kW	4.5	5.6	7.1	8.0	11.2	14.0
Heating capacity	kW	5.0	6.3	8.0	9.0	12.5	16.0
Electrical data							
Power supply	V-ph-Hz	230-1-50 (voltage range 220-240 V) - power supply to indoor unit only					
Operating current	A	0.29	0.32	0.42	0.42	0.78	0.84
Power input	kW	0.033	0.038	0.050	0.050	0.091	0.110
Starting current	A	0.43	0.48	0.62	0.62	1.17	1.25
Unit appearance		White (Munsell 10Y 9.3/0.4)					
Unit dimensions							
Height	mm	210	210	210	210	210	210
Width	mm	910	910	1180	1180	1595	1595
Depth	mm	680	680	680	680	680	680
Unit weight	kg	22	22	26	26	34	34
Heat exchanger		Finned tube					
Sound proofing/heat insulating material		Non-flammable insulation					
Fan type		Centrifugal fan					
Fan motor power input	W	30	30	40	40	80	80
Air flow							
High	l/s	200	217	308	308	458	500
Medium	l/s	167	183	250	250	383	433
Low	l/s	150	150	233	233	333	367
Air flow							
High	m^3/h	720	780	1110	1110	1650	1800
Medium	m^3/h	600	660	900	900	1380	1560
Low	m^3/h	540	540	840	840	1200	1320
Sound power level (high/medium/low)	dB(A)	48/45/43	49/46/43	51/49/46	51/49/46	54/51/48	56/53/50
Sound pressure level (high/medium/low)**	dB(A)	35/32/30	36/33/30	38/36/33	38/36/33	41/38/35	43/40/37
Air filter		Standard long-life filter supplied					
Controller		Remote controller					
Room thermostat		Supplied					
Connection pipes							
Gas connection diameter	in	1/2	1/2	5/8	5/8	5/8	5/8
Liquid connection diameter	in	1/4	1/4	3/8	3/8	3/8	3/8
Drain connection, nom. dia (polyvinyl tube)	in	3/4	3/4	3/4	3/4	3/4	3/4

Rated conditions: Cooling: Indoor air temperature 27°C db/19°C wb, outdoor air temperature 35°C db
Heating: Indoor air temperature 20°C db, outdoor air temperature 7°C db/6°C wb

* Cooling capacities and electrical data are measured at the conditions specified by JIS B 8615, based on the reference piping which consists of 5 m of main piping and 2.5 m of branch piping connected with 0 metre height.

** The sound pressure level is measured in an anechoic chamber in accordance with JIS B 8616. Normally the values measured in the actual operating environment become larger than the indicated values due to the effects of external sound.

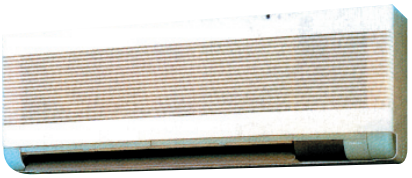

Indoor units

High-wall units (1 Series)

Model MMK-AP		0071H	0091H	0121H	0151H	0181H	0241H
Cooling capacity*	kW	2.2	2.8	3.6	4.5	5.6	7.1
Heating capacity	kW	2.5	3.2	4.0	5.0	6.3	8.0
Electrical data							
Power supply	V-ph-Hz	230-1-50 (voltage range 220-240 V) - power supply to indoor unit only					
Operating current	A	0.30	0.30	0.30	0.32	0.32	0.35
Power input	kW	0.035	0.035	0.035	0.037	0.037	0.040
Starting current	A	0.36	0.36	0.36	0.42	0.42	0.47
Unit appearance							
Suction grille and side panel		Silky mist (Munsell 1Y 8.9/0.5)					
Discharge grille		City grey (Munsell N6.5)					
Bottom surface		Silky mist (Munsell 1Y 8.9/0.5)					
Unit dimensions							
Height	mm	368	368	368	368	368	368
Width	mm	895	895	895	1055	1055	1430
Depth	mm	210	210	210	210	210	210
Unit weight	kg	18	18	18	19	19	25
Heat exchanger		Finned tube					
Sound proofing/heat insulating material		Non-flammable insulation					
Fan type		Tangential fan					
Fan motor power input	W	30	30	30	30	30	30
Air flow							
High	l/s	167	167	167	217	217	333
Medium	l/s	150	150	150	183	183	283
Low	l/s	133	133	133	167	167	250
Air flow							
High	m^3/h	600	600	600	780	780	1200
Medium	m^3/h	540	540	540	660	660	1020
Low	m^3/h	480	480	480	600	600	900
Sound power level (high/medium/low)	dB(A)	52/47/44	52/47/44	52/47/44	55/51/48	55/51/48	55/51/48
Sound pressure level (high/medium/low)**	dB(A)	39/34/31	39/34/31	39/34/31	42/38/35	42/38/35	42/38/35
Air filter		Standard single filter supplied					
Controller		Remote controller					
Connection pipes							
Gas connection diameter	in	3/8	3/8	3/8	1/2	1/2	5/8
Liquid connection diameter	in	1/4	1/4	1/4	1/4	1/4	3/8
Drain connection, nom. dia (polyvinyl tube)	in	3/4	3/4	3/4	3/4	3/4	3/4

Rated conditions: Cooling: Indoor air temperature 27°C db/19°C wb, outdoor air temperature 35°C db
Heating: Indoor air temperature 20°C db, outdoor air temperature 7°C db/6°C wb

* Cooling capacities and electrical data are measured at the conditions specified by JIS B 8615, based on the reference piping which consists of 5 m of main piping and 2.5 m of branch piping connected with 0 metre height.

** The sound pressure level is measured in an anechoic chamber in accordance with JIS B 8616. Normally the values measured in the actual operating environment become larger than the indicated values due to the effects of external sound.

Indoor units

High-wall units (2 Series)

Model MMK-AP		0072H	0092H	0122H
Cooling capacity*	kW	2,2	2,8	3,6
Heating capacity	kW	2,5	3,2	4,0
Electrical data				
Power supply	V-ph-Hz	230-1-50 (voltage range 220-240 V) - power supply to indoor unit only		
Operating current	A	0,17	0,18	0,19
Power input	kW	0,017	0,018	0,019
Starting current	A	0,22	0,23	0,24
Unit appearance				
Suction grille and side panel		Moon white		
Discharge grille		Moon white		
Bottom surface		Moon white		
Unit dimensions				
Height	mm	275	275	275
Width	mm	790	790	790
Depth	mm	208	208	208
Unit weight	kg	11	11	11
Heat exchanger		Finned tube		
Sound proofing/heat insulating material		Non-flammable insulation		
Fan type		Tangential fan		
Fan motor power input	W	30	30	30
Air flow				
High	l/s	133	142	150
Medium	l/s	117	125	125
Low	l/s	100	100	100
Air flow				
High	m^3/h	480	510	540
Medium	m^3/h	420	450	450
Low	m^3/h	360	360	360
Sound power level (high/medium/low)	dB(A)	48/45/42	49/46/42	50/46/42
Sound pressure level (high/medium/low)**	dB(A)	35/32/29	36/33/29	37/33/29
Air filter		Standard single filter supplied		
Controller		Remote controller		
Connection pipes				
Gas connection diameter	in	3/8	3/8	3/8
Liquid connection diameter	in	1/4	1/4	1/4
Drain connection, nom. dia (polyvinyl tube)	mm	16	16	16

Rated conditions: Cooling: Indoor air temperature 27°C db/19°C wb, outdoor air temperature 35°C db
Heating: Indoor air temperature 20°C db, outdoor air temperature 7°C db/6°C wb

* Cooling capacities and electrical data are measured at the conditions specified by JIS B 8615, based on the reference piping which consists of 5 m of main piping and 2.5 m of branch piping connected with 0 metre height.

** The sound pressure level is measured in an anechoic chamber in accordance with JIS B 8616. Normally the values measured in the actual operating environment become larger than the indicated values due to the effects of external sound.

Indoor units

Floor-mounted console units

Model MML-AP		0071H	0091H	0121H	0151H	0181H	0241H
Cooling capacity*	kW	2.2	2.8	3.6	4.5	5.6	7.1
Heating capacity	kW	2.5	3.2	4.0	5.0	6.3	8.0
Electrical data							
Power supply	V-ph-Hz	230-1-50 (voltage range 220-240 V) - power supply to indoor unit only					
Operating current	A	0.26	0.26	0.43	0.43	0.47	0.47
Power input	kW	0.056	0.056	0.092	0.092	0.102	0.102
Power factor	%	94	94	93	93	94	94
Starting current	A	0.60	0.60	0.80	0.80	1.10	1.10
Unit appearance		Silky shade (Munsell 1Y 8.5/0.5)					
Unit dimensions							
Height	mm	630	630	630	630	630	630
Width	mm	950	950	950	950	950	950
Depth	mm	230	230	230	230	230	230
Unit weight	kg	37	37	37	37	40	40
Heat exchanger		Finned tube					
Sound proofing/heat insulating material		Non-flammable insulation					
Fan type		Centrifugal fan					
Fan motor power input	W	45	45	45	45	70	70
Air flow							
High	l/s	133	133	250	250	300	300
Medium	l/s	117	117	217	217	258	258
Low	l/s	100	100	181	181	217	217
Air flow							
High	m^3/h	480	480	900	900	1080	1080
Medium	m^3/h	420	420	780	780	930	930
Low	m^3/h	360	360	650	650	780	780
Sound power level (high/medium/low)	dB(A)	52/50/48	52/50/48	58/54/51	58/54/51	62/57/52	62/57/52
Sound pressure level (high/medium/low)**	dB(A)	39/37/35	39/37/35	45/41/38	45/41/38	49/44/39	49/44/39
Air filter		Standard single filter supplied					
Controller		Remote controller					
Connection pipes							
Gas connection diameter	in	3/8	3/8	3/8	1/2	1/2	5/8
Liquid connection diameter	in	1/4	1/4	1/4	1/4	1/4	3/8
Drain connection, nom. dia (polyvinyl tube)	in	3/4	3/4	3/4	3/4	3/4	3/4

Rated conditions: Cooling: Indoor air temperature 27°C db/19°C wb, outdoor air temperature 35°C db
Heating: Indoor air temperature 20°C db, outdoor air temperature 7°C db/6°C wb

* Cooling capacities and electrical data are measured at the conditions specified by JIS B 8615, based on the reference piping which consists of 5 m of main piping and 2.5 m of branch piping connected with 0 metre height.

** The sound pressure level is measured in an anechoic chamber in accordance with JIS B 8616. Normally the values measured in the actual operating environment become larger than the indicated values due to the effects of external sound.

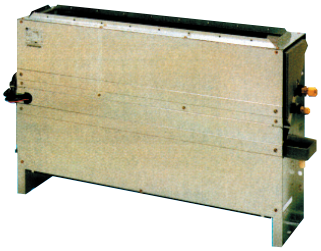

Indoor units

Concealed chassis units

Model MML-AP		0071BH	0091BH	0121BH	0151BH	0181BH	0241BH
Cooling capacity*	kW	2.2	2.8	3.6	4.5	5.6	7.1
Heating capacity	kW	2.5	3.2	4.0	5.0	6.3	8.0
Electrical data							
Power supply	V-ph-Hz	230-1-50 (voltage range 220-240 V) - power supply to indoor unit only					
Operating current	A	0.25	0.25	0.25	0.45	0.45	0.46
Power input	kW	0.056	0.056	0.056	0.090	0.090	0.095
Power factor	%	97	97	97	87	87	90
Starting current	A	0.60	0.60	0.60	0.80	0.80	1.00
Unit appearance		Zinc hot dipping steel plate					
Unit dimensions							
Height	mm	600	600	600	600	600	600
Width	mm	745	745	745	1045	1045	1045
Depth	mm	220	220	220	220	220	220
Unit weight	kg	21	21	21	29	29	29
Heat exchanger		Finned tube					
Sound proofing/heat insulating material		Non-flammable insulation					
Fan type		Centrifugal fan					
Fan motor power input	W	19	19	19	70	70	70
Air flow							
High	l/s	128	128	128	206	206	264
Medium	l/s	111	111	111	167	167	220
Low	l/s	83	83	83	136	136	178
Air flow							
High	m^3/h	460	460	460	740	740	950
Medium	m^3/h	400	400	400	600	600	790
Low	m^3/h	300	300	300	490	490	640
Static pressure	kPa	0	0	0	0	0	0
Sound power level (high/medium/low)	dB(A)	49/47/45	49/47/45	49/47/45	49/47/45	49/47/45	55/50/46
Sound pressure level (high/medium/low)**	dB(A)	36/34/32	36/34/32	36/34/32	36/34/32	36/34/32	42/37/33
Air filter		Standard single filter supplied					
Controller		Remote controller					
Connection pipes							
Gas connection diameter	in	3/8	3/8	3/8	1/2	1/2	5/8
Liquid connection diameter	in	1/4	1/4	1/4	1/4	1/4	3/8
Drain connection, nom. dia.***	in	3/4	3/4	3/4	3/4	3/4	3/4

Rated conditions: Cooling: Indoor air temperature 27°C db/19°C wb, outdoor air temperature 35°C db
Heating: Indoor air temperature 20°C db, outdoor air temperature 7°C db/6°C wb

* Cooling capacities and electrical data are measured at the conditions specified by JIS B 8615, based on the reference piping which consists of 5 m of main piping and 2.5 m of branch piping connected with 0 metre height.

** The sound pressure level is measured in an anechoic chamber in accordance with JIS B 8616. Normally the values measured in the actual operating environment become larger than the indicated values due to the effects of external sound.

*** Male screw connection one side.

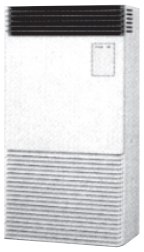

Indoor units

Floor-mounted cabinet units

Model MMF-AP		0151H	0181H	0241H	0271H	0361H	0481H	0561H
Cooling capacity*	kW	4.5	5.6	7.1	8.0	11.2	14.0	16.0
Heating capacity	kW	5.0	6.3	8.0	9.0	12.5	16.0	18.0
Electrical data								
Power supply	V-ph-Hz	230-1-50 (voltage range 220-240 V) - power supply to indoor unit only						
Operating current	A	0.67	0.67	0.88	0.88	1.29	1.60	1.60
Power input	kW	0.150	0.150	0.190	0.190	0.280	0.350	0.350
Power factor	%	97	97	94	94	94	95	95
Starting current	A	0.90	0.90	1.10	1.10	1.70	2.10	2.10
Unit appearance		W: Silky shade (1Y 8.5/0.5)						
Unit dimensions								
Height	mm	1750	1750	1750	1750	1750	1750	1750
Width	mm	600	600	600	600	600	600	600
Depth	mm	210	210	210	210	390	390	390
Unit weight	kg	48	48	49	49	65	65	65
Heat exchanger		Finned tube						
Sound proofing/heat insulating material		Non-flammable insulation						
Fan type		Centrifugal fan						
Fan motor power input	W	37	37	63	63	110	160	160
Air flow								
High	l/s	250	250	333	333	533	600	600
Medium	l/s	217	217	283	283	467	517	517
Low	l/s	183	183	233	233	383	433	433
Air flow								
High	m^3/h	900	900	1200	1200	1920	2160	2160
Medium	m^3/h	780	780	1020	1020	1680	1860	1860
Low	m^3/h	660	660	840	840	1380	1560	1560
Sound power level (high/medium/low)	dB(A)	59/56/51	59/56/51	62/58/53	62/58/53	64/61/57	67/63/59	67/63/59
Sound pressure level (high/medium/low)**	dB(A)	46/43/38	46/43/38	49/45/40	49/45/40	51/48/44	54/50/46	54/50/46
Air filter		Standard single filter supplied						
Controller		Remote controller						
Connection pipes								
Gas connection diameter	in	1/2	1/2	5/8	5/8	5/8	5/8	5/8
Liquid connection diameter	in	1/4	1/4	3/8	3/8	3/8	3/8	3/8
Drain connection, nom. dia***	in	3/4	3/4	3/4	3/4	3/4	3/4	3/4

Rated conditions: Cooling: Indoor air temperature 27°C db/19°C wb, outdoor air temperature 35°C db
Heating: Indoor air temperature 20°C db, outdoor air temperature 7°C db/6°C wb

* Cooling capacities and electrical data are measured at the conditions specified by JIS B 8615, based on the reference piping which consists of 5 m of main piping and 2.5 m of branch piping connected with 0 metre height.

** The sound pressure level is measured in an anechoic chamber in accordance with JIS B 8616. Normally the values measured in the actual operating environment become larger than the indicated values due to the effects of external sound.

*** Male screw connection one side

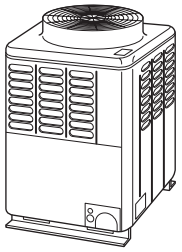

Outdoor units

Rating	hp	5	6	8	10	12
Cooling only model MMY		**MAP0501T8**	**MAP0601T8**	**MAP0801T8**	**MAP1001T8**	**MAP1201T8**
Heat pump model MMY		**MAP0501HT8**	**MAP0601HT8**	**MAP0801HT8**	**MAP1001HT8**	**MAP1201HT8**
Outdoor unit type		Inverter	Inverter	Inverter	Inverter	Inverter
Cooling capacity	kW	14.0	16.0	22.4	28.0	33.5
Heating capacity	kW	16.0	18.0	25.0	31.5	37.5
Power supply	V-ph-Hz	400-3-50 ± 10%	400-3-50 ± 10%	400-3-50 ± 10%	400-3-50 ± 10%	400-3-50 ± 10%
Voltage range	V	380-415	380-415	380-415	380-415	380-415
Power input, cooling	kW	3.65	4.64	5.67	7.68	11.92
Power factor, cooling	%	90	92	95	96	94
Operating current, cooling	A	5.85	7.28	8.62	11.55	18.30
EER, cooling	kW/kW	3.84	3.45	3.95	3.65	2.81
Starting current	A	1.0	1.0	1.0	1.0	1.0
Power input, heating	kW	3.84	4.56	5.88	7.97	10.19
Power factor, heating	%	91	93	95	96	94
Operating current, heating	A	6.09	7.08	8.93	11.98	15.65
COP, heating	kW/kW	4.17	3.95	4.25	3.95	3.68
Starting current	A	1.0	1.0	1.0	1.0	1.0
Unit appearance		Silky shade (Munsell 1Y8.5/0.5)				
Dimensions						
Height	mm	1800	1800	1800	1800	1800
Width	mm	990	990	990	990	990
Depth	mm	750	750	750	750	750
Total weight - cooling only unit	kg	227	227	256	256	256
Total weight - heat pump unit	kg	228	228	258	258	258
Heat exchanger		Finned type				
Sound power level	dB(A)	68	69	70	71	72
Sound pressure level	dB(A) at 1 m	55	56	57	58	59
Fan type		Propeller	Propeller	Propeller	Propeller	Propeller
Motor power input	kW	0.6	0.6	0.6	0.6	0.6
Air flow	l/s - m³/h	2500 - 9000	2500 - 9000	2750 - 9900	2917 - 10500	2917 - 10500
Compressor type		Hermetic	Hermetic	Hermetic	Hermetic	Hermetic
Motor power input	kW	1.1 x 2	1.4 x 2	2.3 x 2	3.1 x 2	4.2 x 2
Refrigerant charge R-410A*						
Cooling	kg	8.0	8.0	11.0	11.0	11.0
Heating	kg	8.5	8.5	12.5	12.5	12.5
Pipework**						
Suction line type - diameter	in	Flare - 5/8	Brazed - 3/4	Brazed - 7/8	Brazed - 7/8	Brazed - 1-1/8
Liquid line type - diameter	in	Flare - 3/8	Flare - 3/8	Flare - 1/2	Flare - 1/2	Flare - 1/2
Balance pipe type - diameter	in	Flare - 3/8	Flare - 3/8	Flare - 3/8	Flare - 3/8	Flare - 3/8
Maximum equivalent length separation	m	175	175	175	175	175
Maximum actual piping length	m	150 (if equivalent bend length is longer, equivalent length is standard)				
Maximum total piping length	m	300	300	300	300	300
Maximum lift - indoor unit above/below***	m	40/50	40/50	40/50	40/50	40/50
Control wiring		Shielded wire 1.25 mm² x 2 cores up to 2000 m				
Central remote controller		Shielded wire 1.25 mm² x 2 pieces up to 1000 m, 2.0 mm² x 2 pieces up to 2000 m				
Max. number of connectable indoor units		8	10	13	16	20
High-pressure switch	MPa	Off: 2.90/On: 3.73				
Protection devices		Discharge temperature sensor, suction temperature sensor, compressor crankcase heater, high-pressure switch, overcurrent sensor, high-pressure sensor, low-pressure sensor, overcurrent relay				
Operating range, cooling†	°C	-5 to 43 db	-5 to 43 db	-5 to 43 db	-5 to 43 db	-5 to 43 db
Operating range, heating†	°C	-20 to 16 wb	-20 to 16 wb	-20 to 16 wb	-20 to 16 wb	-20 to 16 wb

Rated conditions: Cooling: Indoor air temperature 27°C db/19°C wb, outdoor air temperature 35°C db
Heating: Indoor air temperature 20°C db, outdoor air temperature 7°C db/6°C wb
The standard piping equals 5 m main pipe length plus 2.5 m branch pipe length.

* The amount does not cover extra piping lengths. Refrigerant must be added on-site in accordance with the actual piping length.

** The maximum total piping length is the sum of one-way piping lengths on the liquid side or gas side.

*** If the indoor unit is above, maximum lift is reduced to 30 m, if the height difference between indoor units exceeds 3 m.

† Please refer to page 24.

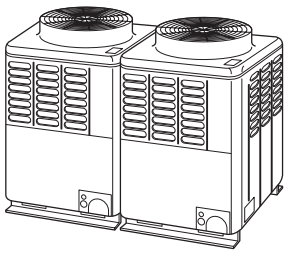

Outdoor units (combination)

Rating	hp	14		16		18		20	
Cooling only system MMY		**AP1401T8**		**AP1601T8**		**AP1801T8**		**AP2001T8**	
Heat pump system MMY		**AP1401HT8**		**AP1601HT8**		**AP1801HT8**		**AP2001HT8**	
Outdoor unit type		Inverter	Inverter	Inverter	Inverter	Inverter	Inverter	Inverter	Inverter
Outdoor unit combination cooling only MMY-MAP		**0801T8**	**0601T8**	**0801T8**	**0801T8**	**1001T8**	**0801T8**	**1001T8**	**1001T8**
Outdoor unit combination heat pump MMY-MAP		**0801HT8**	**0601HT8**	**0801HT8**	**0801HT8**	**1001HT8**	**0801HT8**	**1001HT8**	**1001HT8**
Cooling capacity	kW	38.4		45.0		50.4		56.0	
Heating capacity	kW	43.0		50.0		56.5		63.0	
Power supply	V-ph-Hz	400-3-50 ± 10%		400-3-50 ± 10%		400-3-50 ± 10%		400-3-50 ± 10%	
Voltage range	V	380-415		380-415		380-415		380-415	
Power input, cooling	kW	11.12		12.20		14.16		16.17	
Power factor, cooling	%	94		95		96		96	
Operating current, cooling	A	17.08		18.54		21.29		24.31	
EER, cooling	kW/kW	3.45		3.69		3.56		3.46	
Starting current	A	1.0		1.0		1.0		1.0	
Power input, heating	kW	10.96		12.28		14.37		16.46	
Power factor, heating	%	94		95		96		96	
Operating current, heating	A	16.83		18.65		21.61		24.75	
COP, heating	kW/kW	3.92		4.07		3.93		3.83	
Starting current	A	1.0		1.0		1.0		1.0	
Unit appearance		Silky shade (Munsell 1Y8.5/0.5)							
Dimensions									
Height	mm	1800	1800	1800	1800	1800	1800	1800	1800
Width	mm	990	990	990	990	990	990	990	990
Depth	mm	750	750	750	750	750	750	750	750
Total weight - cooling only unit	kg	256	227	256	256	256	256	256	256
Total weight - heat pump unit	kg	258	228	258	258	258	258	258	258
Heat exchanger		Finned type							
Sound power level	dB(A)	72.5		73		73.5		74	
Sound pressure level	dB(A) at 1 m	59.5		60		60.5		61	
Fan type		Propeller	Propeller	Propeller	Propeller	Propeller	Propeller	Propeller	Propeller
Motor power input	kW	0.6	0.6	0.6	0.6	0.6	0.6	0.6	0.6
Air flow	l/s	2750	2500	2750	2750	2917	2750	2917	2917
	m^3/h	9900	9000	9900	9900	10500	9900	10500	10500
Compressor type		Hermetic	Hermetic	Hermetic	Hermetic	Hermetic	Hermetic	Hermetic	Hermetic
Motor power input	kW	2.3 x 2	1.4 x 2	2.3 x 2	2.3 x 2	3.1 x 2	2.3 x 2	3.1 x 2	3.1 x 2
Refrigerant charge R-410A*									
Cooling	kg	11.0	8.0	11.0	11.0	11.0	11.0	11.0	11.0
Heating	kg	12.5	8.5	12.5	12.5	12.5	12.5	12.5	12.5
Pipework**									
Suction line type - diameter	in	Brazed - 7/8	Brazed - 3/4	Brazed - 7/8	Brazed - 7/8	Brazed - 7/8	Brazed - 7/8	Brazed - 7/8	Brazed - 7/8
Liquid line type - diameter	in	Flare - 1/2	Flare - 3/8	Flare - 1/2	Flare - 1/2	Flare - 1/2	Flare - 1/2	Flare - 1/2	Flare - 1/2
Balance pipe type - diameter	in	Flare - 3/8	Flare - 3/8	Flare - 3/8	Flare - 3/8	Flare - 3/8	Flare - 3/8	Flare - 3/8	Flare - 3/8
Maximum equivalent length separation	m	175	175	175	175	175	175	175	175
Maximum actual piping length	m	150 (if equivalent bend length is longer, equivalent length is standard)							
Maximum total piping length	m	300	300	300	300	300	300	300	300
Maximum lift - indoor unit above/below***	m	40/50	40/50	40/50	40/50	40/50	40/50	40/50	40/50
Control wiring		Shielded wire 1.25 mm^2 x 2 cores up to 2000 m							
Central remote controller		Shielded wire 1.25 mm^2 x 2 pieces up to 1000 m, 2.0 mm^2 x 2 pieces up to 2000 m							
Max. number of connectable indoor units		23		27		30		33	
High-pressure switch	MPa	Off: 2.90/On: 3.73							
Protection devices		Discharge temperature sensor, suction temperature sensor, compressor crankcase heater, high-pressure switch, overcurrent sensor, high-pressure sensor, low-pressure sensor, overcurrent relay							
Operating range, cooling†	°C	-5 to 43 db		-5 to 43 db		-5 to 43 db		-5 to 43 db	
Operating range, heating†	°C	-20 to 16 wb		-20 to 16 wb		-20 to 16 wb		-20 to 16 wb	

Rated conditions: Cooling: Indoor air temperature 27°C db/19°C wb, outdoor air temperature 35°C db
Heating: Indoor air temperature 20°C db, outdoor air temperature 7°C db/6°C wb
The standard piping equals 5 m main pipe length plus 2.5 m branch pipe length.

* The amount does not cover extra piping lengths. Refrigerant must be added on-site in accordance with the actual piping length.

** The maximum total piping length is the sum of one-way piping lengths on the liquid side or gas side.

*** If the indoor unit is above, maximum lift is reduced to 30 m, if the height difference between indoor units exceeds 3 m.

† Please refer to page 24.

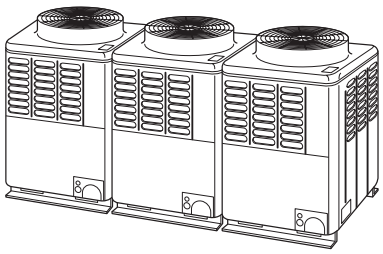

Outdoor units (combination)

Rating	hp	22			22	
Cooling only system MMY		**AP2201T8**			**AP2211T8**	
Heat pump system MMY		**AP2201HT8**			**AP2211HT8**	
Outdoor unit type		Inverter	Inverter	Inverter	Inverter	Inverter
Outdoor unit combination cooling only MMY-MAP		**0801T8**	**0801T8**	**0601T8**	**1201T8**	**1001T8**
Outdoor unit combination heat pump MMY-MAP		**0801HT8**	**0801HT8**	**0601HT8**	**1201HT8**	**1001HT8**
Cooling capacity	kW	61.5			61.5	
Heating capacity	kW	69.0			69.0	
Power supply	V-ph-Hz	400-3-50 ± 10%	400-3-50 ± 10%	400-3-50 ± 10%	400-3-50 ± 10%	400-3-50 ± 10%
Voltage range	V	380-415	380-415	380-415	380-415	380-415
Power input, cooling	kW	17.39			20.41	
Power factor, cooling	%	95			95	
Operating current, cooling	A	26.42			31.01	
EER, cooling	kW/kW	3.54			3.01	
Starting current	A	1.0			1.0	
Power input, heating	kW	17.35			18.68	
Power factor, heating	%	95			95	
Operating current, heating	A	26.36			28.38	
COP, heating	kW/kW	3.98			3.69	
Starting current	A	1.0			1.0	
Unit appearance		Silky shade (Munsell 1Y8.5/0.5)				
Dimensions						
Height	mm	1800	1800	1800	1800	1800
Width	mm	990	990	990	990	990
Depth	mm	750	750	750	750	750
Total weight - cooling only unit	kg	256	256	227	256	256
Total weight - heat pump unit	kg	258	258	228	258	258
Heat exchanger		Finned type				
Sound power level	dB(A)	74.5			74.5	
Sound pressure level	dB(A) at 1 m	61.5			61.5	
Fan type		Propeller	Propeller	Propeller	Propeller	Propeller
Motor power input	kW	0.6	0.6	0.6	0.6	0.6
Air flow	l/s	2750	2750	2500	2917	2917
	m^3/h	9900	9900	9000	10500	10500
Compressor type		Hermetic	Hermetic	Hermetic	Hermetic	Hermetic
Motor power input	kW	2.3 x 2	2.3 x 2	1.4 x 2	4.2 x 2	3.1 x 2
Refrigerant charge R-410A*						
Cooling	kg	11.0	11.0	8.0	11.0	11.0
Heating	kg	12.5	12.5	8.5	12.5	12.5
Pipework**						
Suction line type - diameter	in	Brazed - 7/8	Brazed - 7/8	Brazed - 3/4	Brazed - 1-1/8	Brazed - 7/8
Liquid line type - diameter	in	Flare - 1/2	Flare - 1/2	Flare - 3/8	Flare - 1/2	Flare - 1/2
Balance pipe type - diameter	in	Flare - 3/8	Flare - 3/8	Flare - 3/8	Flare - 3/8	Flare - 3/8
Maximum equivalent length separation	m	175	175	175	175	175
Maximum actual piping length	m	150 (if equivalent bend length is longer, equivalent length is standard)				
Maximum total piping length	m	300	300	300	300	300
Maximum lift - indoor unit above/below***	m	40/50	40/50	40/50	40/50	40/50
Control wiring		Shielded wire 1.25 mm^2 x 2 cores up to 2000 m				
Central remote controller		Shielded wire 1.25 mm^2 x 2 pieces up to 1000 m, 2.0 mm^2 x 2 pieces up to 2000 m				
Max. number of connectable indoor units		37			37	
High-pressure switch	MPa	Off: 2.90/On: 3.73				
Protection devices		Discharge temperature sensor, suction temperature sensor, compressor crankcase heater, high-pressure switch, overcurrent sensor, high-pressure sensor, low-pressure sensor, overcurrent relay				
Operating range, cooling†	°C	-5 to 43 db	-5 to 43 db	-5 to 43 db	-5 to 43 db	-5 to 43 db
Operating range, heating†	°C	-20 to 16 wb	-20 to 16 wb	-20 to 16 wb	-20 to 16 wb	-20 to 16 wb

Rated conditions: Cooling: Indoor air temperature 27°C db/19°C wb, outdoor air temperature 35°C db
Heating: Indoor air temperature 20°C db, outdoor air temperature 7°C db/6°C wb
The standard piping equals 5 m main pipe length plus 2.5 m branch pipe length.

* The amount does not cover extra piping lengths. Refrigerant must be added on-site in accordance with the actual piping length.

** The maximum total piping length is the sum of one-way piping lengths on the liquid side or gas side.

*** If the indoor unit is above, maximum lift is reduced to 30 m, if the height difference between indoor units exceeds 3 m.

† Please refer to page 24.

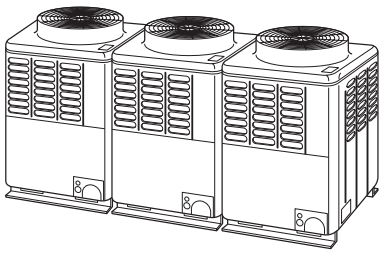

Outdoor units (combination)

Rating	hp	24			24	
Cooling only system MMY		**AP2401T8**			**AP2411T8**	
Heat pump system MMY		**AP2401HT8**			**AP2411HT8**	
Outdoor unit type		Inverter	Inverter	Inverter	Inverter	Inverter
Outdoor unit combination cooling only MMY-MAP		**0801T8**	**0801T8**	**0801T8**	**1201T8**	**1201T8**
Outdoor unit combination heat pump MMY-MAP		**0801HT8**	**0801HT8**	**0801HT8**	**1201HT8**	**1201HT8**
Cooling capacity	kW	68.0			68.0	
Heating capacity	kW	76.5			76.5	
Power supply	V-ph-Hz	400-3-50 ± 10%	400-3-50 ± 10%	400-3-50 ± 10%	400-3-50 ± 10%	400-3-50 ± 10%
Voltage range	V	380-415	380-415	380-415	380-415	380-415
Power input, cooling	kW	18.44			25.02	
Power factor, cooling	%	96			95	
Operating current, cooling	A	27.73			38.02	
EER, cooling	kW/kW	3.69			2.72	
Starting current	A	1.0			1.0	
Power input, heating	kW	18.79			21.32	
Power factor, heating	%	97			96	
Operating current, heating	A	27.96			32.06	
COP, heating	kW/kW	4.07			3.59	
Starting current	A	1.0			1.0	
Unit appearance		Silky shade (Munsell 1Y8.5/0.5)				
Dimensions						
Height	mm	1800	1800	1800	1800	1800
Width	mm	990	990	990	990	990
Depth	mm	750	750	750	750	750
Total weight - cooling only unit	kg	256	256	256	256	256
Total weight - heat pump unit	kg	258	258	258	258	258
Heat exchanger		Finned type				
Sound power level	dB(A)	75.0			75.0	
Sound pressure level	dB(A) at 1 m	62.0			62.0	
Fan type		Propeller	Propeller	Propeller	Propeller	Propeller
Motor power input	kW	0.6	0.6	0.6	0.6	0.6
Air flow	l/s	2750	2750	2750	2917	2917
	m^3/h	9900	9900	9900	10500	10500
Compressor type		Hermetic	Hermetic	Hermetic	Hermetic	Hermetic
Motor power input	kW	2.3 x 2	2.3 x 2	2.3 x 2	4.2 x 2	4.2 x 2
Refrigerant charge R-410A*						
Cooling	kg	11.0	11.0	11.0	11.0	11.0
Heating	kg	12.5	12.5	12.5	12.5	12.5
Pipework**						
Suction line type - diameter	in	Brazed - 7/8	Brazed - 7/8	Brazed - 7/8	Brazed - 1-1/8	Brazed -1-1/8
Liquid line type - diameter	in	Flare - 1/2	Flare - 1/2	Flare - 1/2	Flare - 1/2	Flare - 1/2
Balance pipe type - diameter	in	Flare - 3/8	Flare - 3/8	Flare - 3/8	Flare - 3/8	Flare - 3/8
Maximum equivalent length separation	m	175	175	175	175	175
Maximum actual piping length	m	150 (if equivalent bend length is longer, equivalent length is standard)				
Maximum total piping length	m	300	300	300	300	300
Maximum lift - indoor unit above/below***	m	40/50	40/50	40/50	40/50	40/50
Control wiring		Shielded wire 1.25 mm^2 x 2 cores up to 2000 m				
Central remote controller		Shielded wire 1.25 mm^2 x 2 pieces up to 1000 m, 2.0 mm^2 x 2 pieces up to 2000 m				
Max. number of connectable indoor units		40			40	
High-pressure switch	MPa	Off: 2.90/On: 3.73				
Protection devices		Discharge temperature sensor, suction temperature sensor, compressor crankcase heater, high-pressure switch, overcurrent sensor, high-pressure sensor, low-pressure sensor, overcurrent relay				
Operating range, cooling†	°C	-5 to 43 db	-5 to 43 db	-5 to 43 db	-5 to 43 db	-5 to 43 db
Operating range, heating†	°C	-20 to 16 wb	-20 to 16 wb	-20 to 16 wb	-20 to 16 wb	-20 to 16 wb

Rated conditions: Cooling: Indoor air temperature 27°C db/19°C wb, outdoor air temperature 35°C db
Heating: Indoor air temperature 20°C db, outdoor air temperature 7°C db/6°C wb
The standard piping equals 5 m main pipe length plus 2.5 m branch pipe length.

* The amount does not cover extra piping lengths. Refrigerant must be added on-site in accordance with the actual piping length.

** The maximum total piping length is the sum of one-way piping lengths on the liquid side or gas side.

*** If the indoor unit is above, maximum lift is reduced to 30 m, if the height difference between indoor units exceeds 3 m.

† Please refer to page 24.

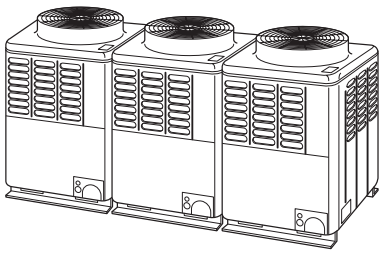

Outdoor units (combination)

Rating	hp	26			28			30		
Cooling only system MMY		**AP2601T8**			**AP2801T8**			**AP3001T8**		
Heat pump system MMY		**AP2601HT8**			**AP2801HT8**			**AP3001HT8**		
Outdoor unit type		Inverter	Inverter	Inverter	Inverter	Inverter	Inverter	Inverter	Inverter	Inverter
Outdoor unit combination cooling only MMY-MAP		**1001T8**	**0801T8**	**0801T8**	**1001T8**	**1001T8**	**0801T8**	**1001T8**	**1001T8**	**1001T8**
Outdoor unit combination heat pump MMY-MAP		**1001HT8**	**0801HT8**	**0801HT8**	**1001HT8**	**1001HT8**	**0801HT8**	**1001HT8**	**1001HT8**	**1001HT8**
Cooling capacity	kW	73.0			78.5			84.0		
Heating capacity	kW	81.5			88.0			95.0		
Power supply ± 10%	V-ph-Hz	400-3-50	400-3-50	400-3-50	400-3-50	400-3-50	400-3-50	400-3-50	400-3-50	400-3-50
Voltage range	V	380-415	380-415	380-415	380-415	380-415	380-415	380-415	380-415	380-415
Power input, cooling	kW	20.29			22.27			24.26		
Power factor, cooling	%	96			96			96		
Operating current, cooling	A	30.51			33.48			36.48		
EER, cooling	kW/kW	3.60			3.52			3.46		
Starting current	A	1.0			1.0			1.0		
Power input, heating	kW	20.51			22.60			24.82		
Power factor, heating	%	95			96			97		
Operating current, heating	A	31.16			33.98			36.93		
COP, heating	kW/kW	3.97			3.89			3.83		
Starting current	A	1.0			1.0			1.0		
Unit appearance		Silky shade (Munsell 1Y8.5/0.5)								
Dimensions										
Height	mm	1800	1800	1800	1800	1800	1800	1800	1800	1800
Width	mm	990	990	990	990	990	990	990	990	990
Depth	mm	750	750	750	750	750	750	750	750	750
Total weight - cooling only unit	kg	256	256	256	256	256	256	256	256	256
Total weight - heat pump unit	kg	258	258	258	258	258	258	258	258	258
Heat exchanger		Finned type								
Sound power level	dB(A)	75.0			75.5			76.0		
Sound pressure level	dB(A) at 1 m	62.0			62.5			63.0		
Fan type		Propeller	Propeller	Propeller	Propeller	Propeller	Propeller	Propeller	Propeller	Propeller
Motor power input	kW	0.6	0.6	0.6	0.6	0.6	0.6	0.6	0.6	0.6
Air flow	l/s	2917	2750	2750	2917	2917	2750	2917	2917	2917
	m^3/h	10500	9900	9900	10500	10500	9900	10500	10500	10500
Compressor type		Hermetic	Hermetic	Hermetic	Hermetic	Hermetic	Hermetic	Hermetic	Hermetic	Hermetic
Motor power input	kW	3.1 x 2	2.3 x 2	2.3 x 2	3.1 x 2	3.1 x 2	2.3 x 2	3.1 x 2	3.1 x 2	3.1 x 2
Refrigerant charge R-410A*										
Cooling	kg	11.0	11.0	11.0	11.0	11.0	11.0	11.0	11.0	11.0
Heating	kg	12.5	12.5	12.5	12.5	12.5	12.5	12.5	12.5	12.5
Pipework**										
Suction line type - diameter	in	Brazed - 7/8	Brazed - 7/8	Brazed - 7/8	Brazed - 7/8	Brazed - 7/8	Brazed - 7/8	Brazed - 7/8	Brazed - 7/8	Brazed - 7/8
Liquid line type - diameter	in	Flare - 1/2	Flare - 1/2	Flare - 1/2	Flare - 1/2	Flare - 1/2	Flare - 1/2	Flare - 1/2	Flare - 1/2	Flare - 1/2
Balance pipe type - diameter	in	Flare - 3/8	Flare - 3/8	Flare - 3/8	Flare - 3/8	Flare - 3/8	Flare - 3/8	Flare - 3/8	Flare - 3/8	Flare - 3/8
Maximum equivalent length separation	m	175	175	175	175	175	175	175	175	175
Maximum actual piping length	m	150 (if equivalent bend length is longer, equivalent length is standard)								
Maximum total piping length	m	300	300	300	300	300	300	300	300	300
Maximum lift - indoor unit above/below***	m	40/50	40/50	40/50	40/50	40/50	40/50	40/50	40/50	40/50
Control wiring		Shielded wire 1.25 mm^2 x 2 cores up to 2000 m								
Central remote controller		Shielded wire 1.25 mm^2 x 2 pieces up to 1000 m, 2.0 mm^2 x 2 pieces up to 2000 m								
Max. number of connectable indoor units		43			47			48		
High-pressure switch	MPa	Off: 2.90/On: 3.73								
Protection devices		Discharge temperature sensor, suction temperature sensor, compressor crankcase heater, high-pressure switch, overcurrent sensor, high-pressure sensor, low-pressure sensor, overcurrent relay								
Operating range, cooling†	°C	-5 to 43 db			-5 to 43 db			-5 to 43 db		
Operating range, heating†	°C	-20 to 16 wb			-20 to 16 wb			-20 to 16 wb		

Rated conditions: Cooling: Indoor air temperature 27°C db/19°C wb, outdoor air temperature 35°C db
Heating: Indoor air temperature 20°C db, outdoor air temperature 7°C db/6°C wb
The standard piping equals 5 m main pipe length plus 2.5 m branch pipe length.

* The amount does not cover extra piping lengths. Refrigerant must be added on-site in accordance with the actual piping length.

** The maximum total piping length is the sum of one-way piping lengths on the liquid side or gas side.

*** If the indoor unit is above, maximum lift is reduced to 30 m, if the height difference between indoor units exceeds 3 m.

† Please refer to page 24.

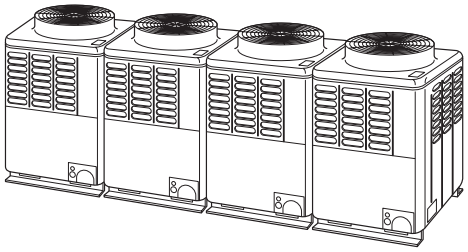

Outdoor units (combination)

Rating	hp	32				32		
Cooling only system MMY		**AP3201T8**				**AP3211T8**		
Heat pump system MMY		**AP3201HT8**				**AP3211HT8**		
Outdoor unit type		Inverter	Inverter	Inverter	Inverter	Inverter	Inverter	Inverter
Outdoor unit combination cooling only MMY-MAP		**0801T8**	**0801T8**	**0801T8**	**0801T8**	**1201T8**	**1001T8**	**1001T8**
Outdoor unit combination heat pump MMY-MAP		**0801HT8**	**0801HT8**	**0801HT8**	**0801HT8**	**1201HT8**	**1001HT8**	**1001HT8**
Cooling capacity	kW	90.0				90.0		
Heating capacity	kW	100.0				100.0		
Power supply ± 10%	V-ph-Hz	400-3-50	400-3-50	400-3-50	400-3-50	400-3-50	400-3-50	400-3-50
Voltage range	V	380-415	380-415	380-415	380-415	380-415	380-415	380-415
Power input, cooling	kW	24.41				28.65		
Power factor, cooling	%	95				96		
Operating current, cooling	A	37.09				43.08		
EER, cooling	kW/kW	3.69				3.14		
Starting current	A	1.0				1.0		
Power input, heating	kW	24.56				26.78		
Power factor, heating	%	95				95		
Operating current, heating	A	37.32				40.69		
COP, heating	kW/kW	4.07				3.73		
Starting current	A	1.0				1.0		
Unit appearance		Silky shade (Munsell 1Y8.5/0.5)						
Dimensions								
Height	mm	1800	1800	1800	1800	1800	1800	1800
Width	mm	990	990	990	990	990	990	990
Depth	mm	750	750	750	750	750	750	750
Total weight - cooling only unit	kg	258	256	256	256	256	256	256
Total weight - heat pump unit	kg	258	258	258	258	258	258	258
Heat exchanger		Finned type						
Sound power level	dB(A)	76.0				76.0		
Sound pressure level	dB(A) at 1 m	63.0				63.0		
Fan type		Propeller	Propeller	Propeller	Propeller	Propeller	Propeller	Propeller
Motor power input	kW	0.6	0.6	0.6	0.6	0.6	0.6	0.6
Air flow	l/s	2750	2750	2750	2750	2917	2917	2917
	m^3/h	9900	9900	9900	9900	10500	10500	10500
Compressor type		Hermetic	Hermetic	Hermetic	Hermetic	Hermetic	Hermetic	Hermetic
Motor power input	kW	2.3 x 2	2.3 x 2	2.3 x 2	2.3 x 2	4.2 x 2	3.1 x 2	3.1 x 2
Refrigerant charge R-410A*								
Cooling	kg	11.0	11.0	11.0	11.0	11.0	11.0	11.0
Heating	kg	12.5	12.5	12.5	12.5	12.5	12.5	12.5
Pipework**								
Suction line type - diameter	in	Brazed - 7/8	Brazed - 7/8	Brazed - 7/8	Brazed - 7/8	Brazed - 1-1/8	Brazed - 7/8	Brazed - 7/8
Liquid line type - diameter	in	Flare - 1/2	Flare - 1/2	Flare - 1/2	Flare - 1/2	Flare - 1/2	Flare - 1/2	Flare - 1/2
Balance pipe type - diameter	in	Flare - 3/8	Flare - 3/8	Flare - 3/8	Flare - 3/8	Flare - 3/8	Flare - 3/8	Flare - 3/8
Maximum equivalent length separation	m	175	175	175	175	175	175	175
Maximum actual piping length	m	150 (if equivalent bend length is longer, equivalent length is standard)						
Maximum total piping length	m	300	300	300	300	300	300	300
Maximum lift - indoor unit above/below***	m	40/50	40/50	40/50	40/50	40/50	40/50	40/50
Control wiring		Shielded wire 1.25 mm^2 x 2 cores up to 2000 m						
Central remote controller		Shielded wire 1.25 mm^2 x 2 pieces up to 1000 m, 2.0 mm^2 x 2 pieces up to 2000 m						
Max. number of connectable indoor units		48				48		
High-pressure switch	MPa	Off: 2.90/On: 3.73						
Protection devices		Discharge temperature sensor, suction temperature sensor, compressor crankcase heater, high-pressure switch, overcurrent sensor, high-pressure sensor, low-pressure sensor, overcurrent relay						
Operating range, cooling†	°C	-5 to 43 db	-5 to 43 db	-5 to 43 db	-5 to 43 db	-5 to 43 db	-5 to 43 db	-5 to 43 db
Operating range, heating†	°C	-20 to 16 wb	-20 to 16 wb	-20 to 16 wb	-20 to 16 wb	-20 to 16 wb	-20 to 16 wb	-20 to 16 wb

Rated conditions: Cooling: Indoor air temperature 27°C db/19°C wb, outdoor air temperature 35°C db
Heating: Indoor air temperature 20°C db, outdoor air temperature 7°C db/6°C wb
The standard piping equals 5 m main pipe length plus 2.5 m branch pipe length.

* The amount does not cover extra piping lengths. Refrigerant must be added on-site in accordance with the actual piping length.

** The maximum total piping length is the sum of one-way piping lengths on the liquid side or gas side.

*** If the indoor unit is above, maximum lift is reduced to 30 m, if the height difference between indoor units exceeds 3 m.

† Please refer to page 24.

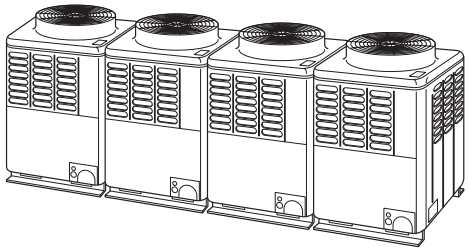

Outdoor units (combination)

Rating	hp	34				34		
Cooling only system MMY		**AP3401T8**				**AP3411T8**		
Heat pump system MMY		**AP3401HT8**				**AP3411HT8**		
Outdoor unit type		Inverter	Inverter	Inverter	Inverter	Inverter	Inverter	Inverter
Outdoor unit combination cooling only MMY-MAP		**1001T8**	**0801T8**	**0801T8**	**0801T8**	**1201T8**	**1201T8**	**1001T8**
Outdoor unit combination heat pump MMY-MAP		**1001HT8**	**0801HT8**	**0801HT8**	**0801HT8**	**1201HT8**	**1201HT8**	**1001HT8**
Cooling capacity	kW	96.0				96.0		
Heating capacity	kW	108.0				108.0		
Power supply ± 10%	V-ph-Hz	400-3-50	400-3-50	400-3-50	400-3-50	400-3-50	400-3-50	400-3-50
Voltage range	V	380-415	380-415	380-415	380-415	380-415	380-415	380-415
Power input, cooling	kW	26.53				33.08		
Power factor, cooling	%	96				95		
Operating current, cooling	A	39.89				50.26		
EER, cooling	kW/kW	3.62				2.90		
Starting current	A	1.0				1.0		
Power input, heating	kW	27.03				29.54		
Power factor, heating	%	97				96		
Operating current, heating	A	40.22				44.42		
COP, heating	kW/kW	4.00				3.66		
Starting current	A	1.0				1.0		
Unit appearance		Silky shade (Munsell 1Y8.5/0.5)						
Dimensions								
Height	mm	1800	1800	1800	1800	1800	1800	1800
Width	mm	990	990	990	990	990	990	990
Depth	mm	750	750	750	750	750	750	750
Total weight - cooling only unit	kg	256	256	256	256	256	256	256
Total weight - heat pump unit	kg	258	258	258	258	258	258	258
Heat exchanger		Finned type						
Sound power level	dB(A)	76.5				76.5		
Sound pressure level	dB(A) at 1 m	63.5				63.5		
Fan type		Propeller	Propeller	Propeller	Propeller	Propeller	Propeller	Propeller
Motor power input	kW	0.6	0.6	0.6	0.6	0.6	0.6	0.6
Air flow	l/s	2917	2750	2750	2750	2917	2917	2917
	m^3/h	10500	9900	9900	9900	10500	10500	10500
Compressor type		Hermetic	Hermetic	Hermetic	Hermetic	Hermetic	Hermetic	Hermetic
Motor power input	kW	3.1 x 2	2.3 x 2	2.3 x 2	2.3 x 2	4.2 x 2	4.2 x 2	3.1 x 2
Refrigerant charge R-410A*								
Cooling	kg	11.0	11.0	11.0	11.0	11.0	11.0	11.0
Heating	kg	12.5	12.5	12.5	12.5	12.5	12.5	12.5
Pipework**								
Suction line type - diameter	in	Brazed - 7/8	Brazed - 7/8	Brazed - 7/8	Brazed - 7/8	Brazed - 1-1/8	Brazed - 1-1/8	Brazed - 7/8
Liquid line type - diameter	in	Flare - 1/2	Flare - 1/2	Flare - 1/2	Flare - 1/2	Flare - 1/2	Flare - 1/2	Flare - 1/2
Balance pipe type - diameter	in	Flare - 3/8	Flare - 3/8	Flare - 3/8	Flare - 3/8	Flare - 3/8	Flare - 3/8	Flare - 3/8
Maximum equivalent length separation	m	175	175	175	175	175	175	175
Maximum actual piping length	m	150 (if equivalent bend length is longer, equivalent length is standard)						
Maximum total piping length	m	300	300	300	300	300	300	300
Maximum lift - indoor unit above/below***	m	40/50	40/50	40/50	40/50	40/50	40/50	40/50
Control wiring		Shielded wire 1.25 mm^2 x 2 cores up to 2000 m						
Central remote controller		Shielded wire 1.25 mm^2 x 2 pieces up to 1000 m, 2.0 mm^2 x 2 pieces up to 2000 m						
Max. number of connectable indoor units		48				48		
High-pressure switch	MPa	Off: 2.90/On: 3.73						
Protection devices		Discharge temperature sensor, suction temperature sensor, compressor crankcase heater, high-pressure switch, overcurrent sensor, high-pressure sensor, low-pressure sensor, overcurrent relay						
Operating range, cooling†	°C	-5 to 43 db	-5 to 43 db	-5 to 43 db	-5 to 43 db	-5 to 43 db	-5 to 43 db	-5 to 43 db
Operating range, heating†	°C	-20 to 16 wb	-20 to 16 wb	-20 to 16 wb	-20 to 16 wb	-20 to 16 wb	-20 to 16 wb	-20 to 16 wb

Rated conditions: Cooling: Indoor air temperature 27°C db/19°C wb, outdoor air temperature 35°C db
Heating: Indoor air temperature 20°C db, outdoor air temperature 7°C db/6°C wb
The standard piping equals 5 m main pipe length plus 2.5 m branch pipe length.

* The amount does not cover extra piping lengths. Refrigerant must be added on-site in accordance with the actual piping length.

** The maximum total piping length is the sum of one-way piping lengths on the liquid side or gas side.

*** If the indoor unit is above, maximum lift is reduced to 30 m, if the height difference between indoor units exceeds 3 m.

† Please refer to page 24.

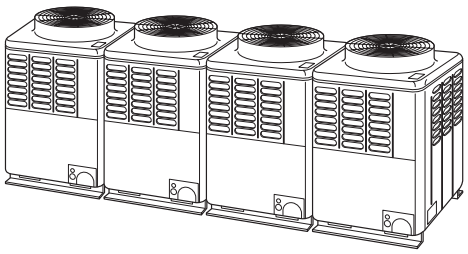

Outdoor units (combination)

Rating	hp	36				36		
Cooling only system MMY		**AP3601T8**				**AP3611T8**		
Heat pump system MMY		**AP3601HT8**				**AP3611HT8**		
Outdoor unit type		Inverter	Inverter	Inverter	Inverter	Inverter	Inverter	Inverter
Outdoor unit combination cooling only MMY-MAP		**1001T8**	**1001T8**	**0801T8**	**0801T8**	**1201T8**	**1201T8**	**1201T8**
Outdoor unit combination heat pump MMY-MAP		**1001HT8**	**1001HT8**	**0801HT8**	**0801HT8**	**1201HT8**	**1201HT8**	**1201HT8**
Cooling capacity	kW	101.0				101.0		
Heating capacity	kW	113.0				113.0		
Power supply ± 10%	V-ph-Hz	400-3-50	400-3-50	400-3-50	400-3-50	400-3-50	400-3-50	400-3-50
Voltage range	V	380-415	380-415	380-415	380-415	380-415	380-415	380-415
Power input, cooling	kW	28.38				37.16		
Power factor, cooling	%	96				94		
Operating current, cooling	A	42.67				57.06		
EER, cooling	kW/kW	3.56				2.72		
Starting current	A	1.0				1.0		
Power input, heating	kW	28.74				31.49		
Power factor, heating	%	96				94		
Operating current, heating	A	43.21				48.36		
COP, heating	kW/kW	3.93				3.59		
Starting current	A	1.0				1.0		
Unit appearance		Silky shade (Munsell 1Y8.5/0.5)						
Dimensions								
Height	mm	1800	1800	1800	1800	1800	1800	1800
Width	mm	990	990	990	990	990	990	990
Depth	mm	750	750	750	750	750	750	750
Total weight - cooling only unit	kg	256	256	256	256	256	256	256
Total weight - heat pump unit	kg	258	258	258	258	258	258	258
Heat exchanger		Finned type						
Sound power level	dB(A)	76.5				77.0		
Sound pressure level	dB(A) at 1 m	63.5				64.0		
Fan type		Propeller	Propeller	Propeller	Propeller	Propeller	Propeller	Propeller
Motor power input	kW	0.6	0.6	0.6	0.6	0.6	0.6	0.6
Air flow	l/s	2917	2917	2750	2750	2917	2917	2917
	m^3/h	10500	10500	9900	9900	10500	10500	10500
Compressor type		Hermetic	Hermetic	Hermetic	Hermetic	Hermetic	Hermetic	Hermetic
Motor power input	kW	3.1 x 2	3.1 x 2	2.3 x 2	2.3 x 2	4.2 x 2	4.2 x 2	4.2 x 2
Refrigerant charge R-410A*								
Cooling	kg	11.0	11.0	11.0	11.0	11.0	11.0	11.0
Heating	kg	12.5	12.5	12.5	12.5	12.5	12.5	12.5
Pipework**								
Suction line type - diameter	in	Brazed - 7/8	Brazed - 7/8	Brazed - 7/8	Brazed - 7/8	Brazed - 1-1/8	Brazed - 1-1/8	Brazed - 1-1/8
Liquid line type - diameter	in	Flare - 1/2	Flare - 1/2	Flare - 1/2	Flare - 1/2	Flare - 1/2	Flare - 1/2	Flare - 1/2
Balance pipe type - diameter	in	Flare - 3/8	Flare - 3/8	Flare - 3/8	Flare - 3/8	Flare - 3/8	Flare - 3/8	Flare - 3/8
Maximum equivalent length separation	m	175	175	175	175	175	175	175
Maximum actual piping length	m	150 (if equivalent bend length is longer, equivalent length is standard)						
Maximum total piping length	m	300	300	300	300	300	300	300
Maximum lift - indoor unit above/below***	m	40/50	40/50	40/50	40/50	40/50	40/50	40/50
Control wiring		Shielded wire 1.25 mm^2 x 2 cores up to 2000 m						
Central remote controller		Shielded wire 1.25 mm^2 x 2 pieces up to 1000 m, 2.0 mm^2 x 2 pieces up to 2000 m						
Max. number of connectable indoor units		48				48		
High-pressure switch	MPa	Off: 2.90/On: 3.73						
Protection devices		Discharge temperature sensor, suction temperature sensor, compressor crankcase heater, high-pressure switch, overcurrent sensor, high-pressure sensor, low-pressure sensor, overcurrent relay						
Operating range, cooling†	°C	-5 to 43 db	-5 to 43 db	-5 to 43 db	-5 to 43 db	-5 to 43 db	-5 to 43 db	-5 to 43 db
Operating range, heating†	°C	-20 to 16 wb	-20 to 16 wb	-20 to 16 wb	-20 to 16 wb	-20 to 16 wb	-20 to 16 wb	-20 to 16 wb

Rated conditions: Cooling: Indoor air temperature 27°C db/19°C wb, outdoor air temperature 35°C db
Heating: Indoor air temperature 20°C db, outdoor air temperature 7°C db/6°C wb
The standard piping equals 5 m main pipe length plus 2.5 m branch pipe length.

* The amount does not cover extra piping lengths. Refrigerant must be added on-site in accordance with the actual piping length.

** The maximum total piping length is the sum of one-way piping lengths on the liquid side or gas side.

*** If the indoor unit is above, maximum lift is reduced to 30 m, if the height difference between indoor units exceeds 3 m.

† Please refer to page 24.

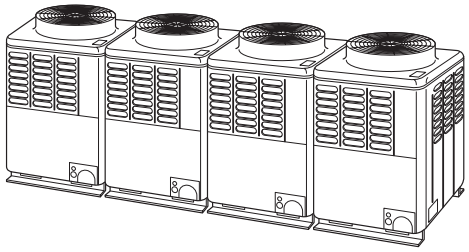

Outdoor units (combination)

Rating	hp	38				40			
Cooling only system MMY		**AP3801T8**				**AP4001T8**			
Heat pump system MMY		**AP3801HT8**				**AP4001HT8**			
Outdoor unit type		Inverter	Inverter	Inverter	Inverter	Inverter	Inverter	Inverter	Inverter
Outdoor unit combination cooling only MMY-MAP		**1001T8**	**1001T8**	**1001T8**	**0801T8**	**1001T8**	**1001T8**	**1001T8**	**1001T8**
Outdoor unit combination heat pump MMY-MAP		**1001HT8**	**1001HT8**	**1001HT8**	**0801HT8**	**1001HT8**	**1001HT8**	**1001HT8**	**1001HT8**
Cooling capacity	kW	106.5				112.0			
Heating capacity	kW	119.5				126.5			
Power supply ± 10%	V-ph-Hz	400-3-50	400-3-50	400-3-50	400-3-50	400-3-50	400-3-50	400-3-50	400-3-50
Voltage range	V	380-415	380-415	380-415	380-415	380-415	380-415	380-415	380-415
Power input, cooling	kW	30.36				32.34			
Power factor, cooling	%	96				96			
Operating current, cooling	A	45.65				48.63			
EER, cooling	kW/kW	3.51				3.46			
Starting current	A	1.0				1.0			
Power input, heating	kW	30.83				33.05			
Power factor, heating	%	96				96			
Operating current, heating	A	46.36				49.69			
COP, heating	kW/kW	3.88				3.83			
Starting current	A	1.0				1.0			
Unit appearance		Silky shade (Munsell 1Y8.5/0.5)							
Dimensions									
Height	mm	1800	1800	1800	1800	1800	1800	1800	1800
Width	mm	990	990	990	990	990	990	990	990
Depth	mm	750	750	750	750	750	750	750	750
Total weight - cooling only unit	kg	256	256	256	256	256	256	256	256
Total weight - heat pump unit	kg	258	258	258	258	258	258	258	258
Heat exchanger		Finned type							
Sound power level	dB(A)	77.0				77.0			
Sound pressure level	dB(A) at 1 m	64.0				64.0			
Fan type		Propeller	Propeller	Propeller	Propeller	Propeller	Propeller	Propeller	Propeller
Motor power input	kW	0.6	0.6	0.6	0.6	0.6	0.6	0.6	0.6
Air flow	l/s	2917	2917	2917	2750	2917	2917	2917	2917
	m^3/h	10500	10500	10500	9900	10500	10500	10500	10500
Compressor type		Hermetic	Hermetic	Hermetic	Hermetic	Hermetic	Hermetic	Hermetic	Hermetic
Motor power input	kW	3.1 x 2	3.1 x 2	3.1 x 2	2.3 x 2	3.1 x 2	3.1 x 2	3.1 x 2	3.1 x 2
Refrigerant charge R-410A*									
Cooling	kg	11.0	11.0	11.0	11.0	11.0	11.0	11.0	11.0
Heating	kg	12.5	12.5	12.5	12.5	12.5	12.5	12.5	12.5
Pipework**									
Suction line type - diameter	in	Brazed - 7/8	Brazed - 7/8	Brazed - 7/8	Brazed - 7/8	Brazed - 7/8	Brazed - 7/8	Brazed - 7/8	Brazed - 7/8
Liquid line type - diameter	in	Flare - 1/2	Flare - 1/2	Flare - 1/2	Flare - 1/2	Flare - 1/2	Flare - 1/2	Flare - 1/2	Flare - 1/2
Balance pipe type - diameter	in	Flare - 3/8	Flare - 3/8	Flare - 3/8	Flare - 3/8	Flare - 3/8	Flare - 3/8	Flare - 3/8	Flare - 3/8
Maximum equivalent length separation	m	175	175	175	175	175	175	175	175
Maximum actual piping length	m	150 (if equivalent bend length is longer, equivalent length is standard)							
Maximum total piping length	m	300	300	300	300	300	300	300	300
Maximum lift - indoor unit above/below***	m	40/50	40/50	40/50	40/50	40/50	40/50	40/50	40/50
Control wiring		Shielded wire 1.25 mm^2 x 2 cores up to 2000 m							
Central remote controller		Shielded wire 1.25 mm^2 x 2 pieces up to 1000 m, 2.0 mm^2 x 2 pieces up to 2000 m							
Max. number of connectable indoor units		48				48			
High-pressure switch	MPa	Off: 2.90/On: 3.73							
Protection devices		Discharge temperature sensor, suction temperature sensor, compressor crankcase heater, high-pressure switch, overcurrent sensor, high-pressure sensor, low-pressure sensor, overcurrent relay							
Operating range, cooling†	°C	-5 to 43 db	-5 to 43 db	-5 to 43 db	5 to 43 db	-5 to 43 db	-5 to 43 db	5 to 43 db	-5 to 43 db
Operating range, heating†	°C	-20 to 16 wb	-20 to 16 wb	-20 to 16 wb	-20 to 16 wb	-20 to 16 wb	-20 to 16 wb	-20 to 16 wb	-20 to 16 wb

Rated conditions: Cooling: Indoor air temperature 27°C db/19°C wb, outdoor air temperature 35°C db
Heating: Indoor air temperature 20°C db, outdoor air temperature 7°C db/6°C wb
The standard piping equals 5 m main pipe length plus 2.5 m branch pipe length.

* The amount does not cover extra piping lengths. Refrigerant must be added on-site in accordance with the actual piping length.

** The maximum total piping length is the sum of one-way piping lengths on the liquid side or gas side.

*** If the indoor unit is above, maximum lift is reduced to 30 m, if the height difference between indoor units exceeds 3 m.

† Please refer to page 24.

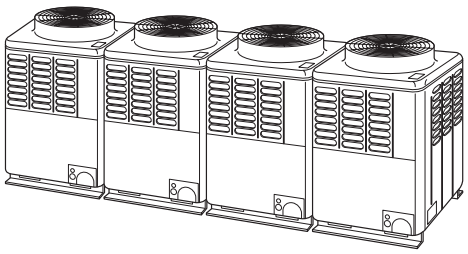

Outdoor units (combination)

Rating	hp	42				44			
Cooling only system MMY		**AP4201T8**				**AP4401T8**			
Heat pump system MMY		**AP4201HT8**				**AP4401HT8**			
Outdoor unit type		Inverter	Inverter	Inverter	Inverter	Inverter	Inverter	Inverter	Inverter
Outdoor unit combination cooling only MMY-MAP		**1201T8**	**1001T8**	**1001T8**	**1001T8**	**1201T8**	**1201T8**	**1001T8**	**1001T8**
Outdoor unit combination heat pump MMY-MAP		**1201HT8**	**1001HT8**	**1001HT8**	**1001HT8**	**1201HT8**	**1201HT8**	**1001HT8**	**1001HT8**
Cooling capacity	kW	118.0				123.5			
Heating capacity	kW	132.0				138.5			
Power supply ± 10%	V-ph-Hz	400-3-50	400-3-50	400-3-50	400-3-50	400-3-50	400-3-50	400-3-50	400-3-50
Voltage range	V	380-415	380-415	380-415	380-415	380-415	380-415	380-415	380-415
Power input, cooling	kW	36.74				40.99			
Power factor, cooling	%	96				95			
Operating current, cooling	A	55.24				62.28			
EER, cooling	kW/kW	3.21				3.01			
Starting current	A	1.0				1.0			
Power input, heating	kW	35.14				37.36			
Power factor, heating	%	95				95			
Operating current, heating	A	53.39				56.76			
COP, heating	kW/kW	3.76				3.69			
Starting current	A	1.0				1.0			
Unit appearance		Silky shade (Munsell 1Y8.5/0.5)							
Dimensions									
Height	mm	1800	1800	1800	1800	1800	1800	1800	1800
Width	mm	990	990	990	990	990	990	990	990
Depth	mm	750	750	750	750	750	750	750	750
Total weight - cooling only unit	kg	256	256	256	256	256	256	256	256
Total weight - heat pump unit	kg	258	258	258	258	258	258	258	258
Heat exchanger		Finned type							
Sound power level	dB(A)	77.5				77.5			
Sound pressure level	dB(A) at 1 m	64.5				64.5			
Fan type		Propeller	Propeller	Propeller	Propeller	Propeller	Propeller	Propeller	Propeller
Motor power input	kW	0.6	0.6	0.6	0.6	0.6	0.6	0.6	0.6
Air flow	l/s	2917	2917	2917	2917	2917	2917	2917	2917
	m^3/h	10500	10500	10500	10500	10500	10500	10500	10500
Compressor type		Hermetic	Hermetic	Hermetic	Hermetic	Hermetic	Hermetic	Hermetic	Hermetic
Motor power input	kW	4.2 x 2	3.1 x 2	3.1 x 2	3.1 x 2	4.2 x 2	4.2 x 2	3.1 x 2	3.1 x 2
Refrigerant charge R-410A*									
Cooling	kg	11.0	11.0	11.0	11.0	11.0	11.0	11.0	11.0
Heating	kg	12.5	12.5	12.5	12.5	12.5	12.5	12.5	12.5
Pipework**									
Suction line type - diameter	in	Brazed - 1-1/8	Brazed - 7/8	Brazed - 7/8	Brazed - 7/8	Brazed - 1-1/8	Brazed - 1-1/8	Brazed - 7/8	Brazed - 7/8
Liquid line type - diameter	in	Flare - 1/2	Flare - 1/2	Flare - 1/2	Flare - 1/2	Flare - 1/2	Flare - 1/2	Flare - 1/2	Flare - 1/2
Balance pipe type - diameter	in	Flare - 3/8	Flare - 3/8	Flare - 3/8	Flare - 3/8	Flare - 3/8	Flare - 3/8	Flare - 3/8	Flare - 3/8
Maximum equivalent length separation	m	175	175	175	175	175	175	175	175
Maximum actual piping length	m	150 (if equivalent bend length is longer, equivalent length is standard)							
Maximum total piping length	m	300	300	300	300	300	300	300	300
Maximum lift - indoor unit above/below***	m	40/50	40/50	40/50	40/50	40/50	40/50	40/50	40/50
Control wiring		Shielded wire 1.25 mm^2 x 2 cores up to 2000 m							
Central remote controller		Shielded wire 1.25 mm^2 x 2 pieces up to 1000 m, 2.0 mm^2 x 2 pieces up to 2000 m							
Max. number of connectable indoor units		48				48			
High-pressure switch	MPa	Off: 2.90/On: 3.73							
Protection devices		Discharge temperature sensor, suction temperature sensor, compressor crankcase heater, high-pressure switch, overcurrent sensor, high-pressure sensor, low-pressure sensor, overcurrent relay							
Operating range, cooling†	°C	-5 to 43 db	-5 to 43 db	-5 to 43 db	5 to 43 db	-5 to 43 db	-5 to 43 db	5 to 43 db	-5 to 43 db
Operating range, heating†	°C	-20 to 16 wb	-20 to 16 wb	-20 to 16 wb	-20 to 16 wb	-20 to 16 wb	-20 to 16 wb	-20 to 16 wb	-20 to 16 wb

Rated conditions: Cooling: Indoor air temperature 27°C db/19°C wb, outdoor air temperature 35°C db
Heating: Indoor air temperature 20°C db, outdoor air temperature 7°C db/6°C wb
The standard piping equals 5 m main pipe length plus 2.5 m branch pipe length.

* The amount does not cover extra piping lengths. Refrigerant must be added on-site in accordance with the actual piping length.

** The maximum total piping length is the sum of one-way piping lengths on the liquid side or gas side.

*** If the indoor unit is above, maximum lift is reduced to 30 m, if the height difference between indoor units exceeds 3 m.

† Please refer to page 24.

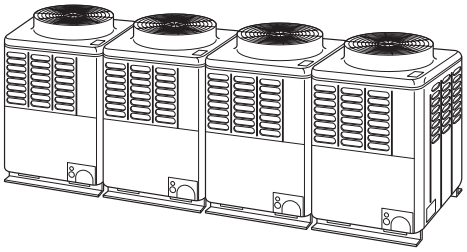

Outdoor units (combination)

Rating	hp	46				48			
Cooling only system MMY		**AP4601T8**				**AP4801T8**			
Heat pump system MMY		**AP4601HT8**				**AP4801HT8**			
Outdoor unit type		Inverter	Inverter	Inverter	Inverter	Inverter	Inverter	Inverter	Inverter
Outdoor unit combination cooling only MMY-MAP		**1201T8**	**1201T8**	**1201T8**	**1001T8**	**1201T8**	**1201T8**	**1201T8**	**1201T8**
Outdoor unit combination heat pump MMY-MAP		**1201HT8**	**1201HT8**	**1201HT8**	**1001HT8**	**1201HT8**	**1201HT8**	**1201HT8**	**1201HT8**
Cooling capacity	kW	130.0				135.0			
Heating capacity	kW	145.0				150.0			
Power supply ± 10%	V-ph-Hz	400-3-50	400-3-50	400-3-50	400-3-50	400-3-50	400-3-50	400-3-50	400-3-50
Voltage range	V	380-415	380-415	380-415	380-415	380-415	380-415	380-415	380-415
Power input, cooling	kW	45.59				49.67			
Power factor, cooling	%	95				95			
Operating current, cooling	A	69.27				75.47			
EER, cooling	kW/kW	2.85				2.72			
Starting current	A	1.0				1.0			
Power input, heating	kW	39.85				41.80			
Power factor, heating	%	95				94			
Operating current, heating	A	60.55				64.19			
COP, heating	kW/kW	3.64				3.59			
Starting current	A	1.0				1.0			
Unit appearance		Silky shade (Munsell 1Y8.5/0.5)							
Dimensions									
Height	mm	1800	1800	1800	1800	1800	1800	1800	1800
Width	mm	990	990	990	990	990	990	990	990
Depth	mm	750	750	750	750	750	750	750	750
Total weight - cooling only unit	kg	256	256	256	256	256	256	256	256
Total weight - heat pump unit	kg	258	258	258	258	258	258	258	258
Heat exchanger		Finned type							
Sound power level	dB(A)	78.0				78.0			
Sound pressure level	dB(A) at 1 m	65.0				65.0			
Fan type		Propeller	Propeller	Propeller	Propeller	Propeller	Propeller	Propeller	Propeller
Motor power input	kW	0.6	0.6	0.6	0.6	0.6	0.6	0.6	0.6
Air flow	l/s	2917	2917	2917	2917	2917	2917	2917	2917
	m^3/h	10500	10500	10500	10500	10500	10500	10500	10500
Compressor type		Hermetic	Hermetic	Hermetic	Hermetic	Hermetic	Hermetic	Hermetic	Hermetic
Motor power input	kW	4.2 x 2	4.2 x 2	4.2 x 2	3.1 x 2	4.2 x 2	4.2 x 2	4.2 x 2	4.2 x 2
Refrigerant charge R-410A*									
Cooling	kg	11.0	11.0	11.0	11.0	11.0	11.0	11.0	11.0
Heating	kg	12.5	12.5	12.5	12.5	12.5	12.5	12.5	12.5
Pipework**									
Suction line type - diameter		Brazed - 1-1/8	Brazed - 1-1/8	Brazed - 1-1/8	Brazed - 7/8	Brazed - 1-1/8	Brazed - 1-1/8	Brazed - 1-1/8	Brazed - 1-1/8
Liquid line type - diameter	in	Flare - 1/2	Flare - 1/2	Flare - 1/2	Flare - 1/2	Flare - 1/2	Flare - 1/2	Flare - 1/2	Flare - 1/2
Balance pipe type - diameter	in	Flare - 3/8	Flare - 3/8	Flare - 3/8	Flare - 3/8	Flare - 3/8	Flare - 3/8	Flare - 3/8	Flare - 3/8
Maximum equivalent length separation	m	175	175	175	175	175	175	175	175
Maximum actual piping length	m	150 (if equivalent bend length is longer, equivalent length is standard)							
Maximum total piping length	m	300	300	300	300	300	300	300	300
Maximum lift - indoor unit above/below***	m	40/50	40/50	40/50	40/50	40/50	40/50	40/50	40/50
Control wiring		Shielded wire 1.25 mm^2 x 2 cores up to 2000 m							
Central remote controller		Shielded wire 1.25 mm^2 x 2 pieces up to 1000 m, 2.0 mm^2 x 2 pieces up to 2000 m							
Max. number of connectable indoor units		48				48			
High-pressure switch	MPa	Off: 2.90/On: 3.73							
Protection devices		Discharge temperature sensor, suction temperature sensor, compressor crankcase heater, high-pressure switch, overcurrent sensor, high-pressure sensor, low-pressure sensor, overcurrent relay							
Operating range, cooling†	°C	-5 to 43 db	-5 to 43 db	-5 to 43 db	5 to 43 db	-5 to 43 db	-5 to 43 db	5 to 43 db	-5 to 43 db
Operating range, heating†	°C	-20 to 16 wb	-20 to 16 wb	-20 to 16 wb	-20 to 16 wb	-20 to 16 wb	-20 to 16 wb	-20 to 16 wb	-20 to 16 wb

Rated conditions: Cooling: Indoor air temperature 27°C db/19°C wb, outdoor air temperature 35°C db
Heating: Indoor air temperature 20°C db, outdoor air temperature 7°C db/6°C wb
The standard piping equals 5 m main pipe length plus 2.5 m branch pipe length.

* The amount does not cover extra piping lengths. Refrigerant must be added on-site in accordance with the actual piping length.

** The maximum total piping length is the sum of one-way piping lengths on the liquid side or gas side.

*** If the indoor unit is above, maximum lift is reduced to 30 m, if the height difference between indoor units exceeds 3 m.

† Please refer to page 24.

10. Fan characteristics

In case of square duct flange of discharge section

MMD-AP0071BH, AP0091BH

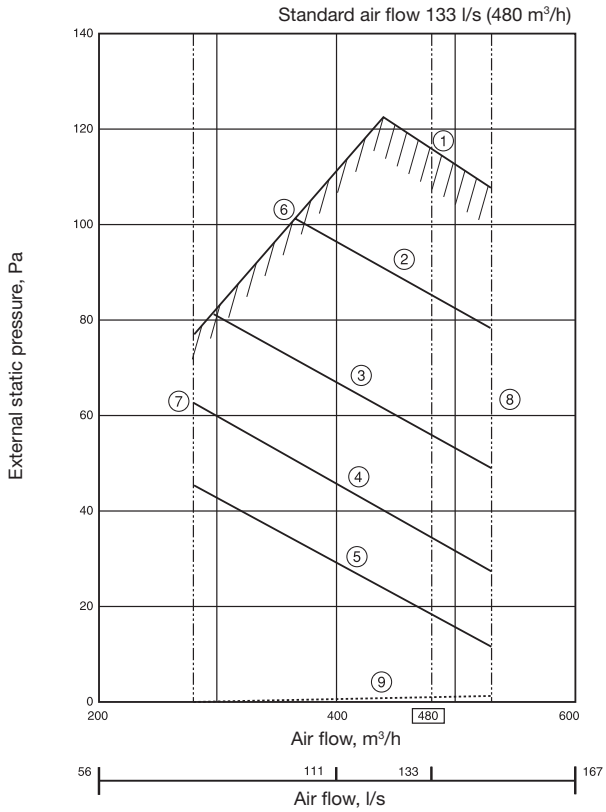

MMD-AP0121BH

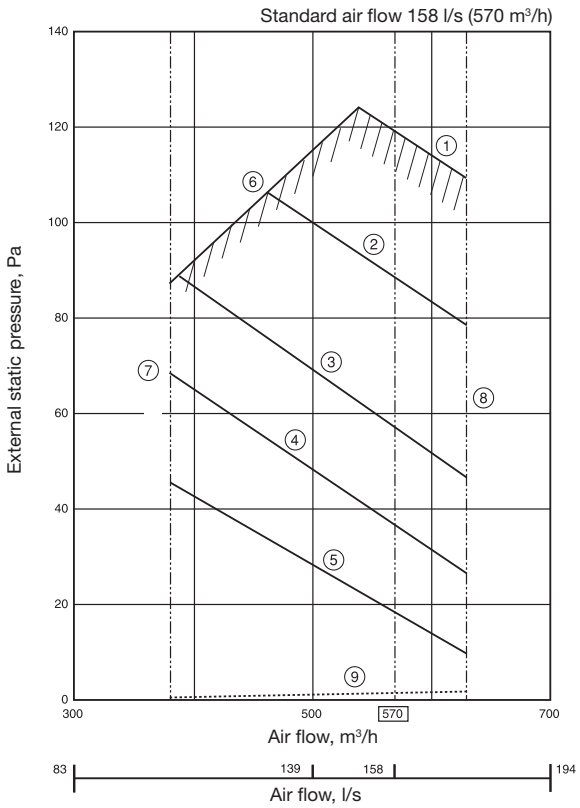

MMD-AP0151BH

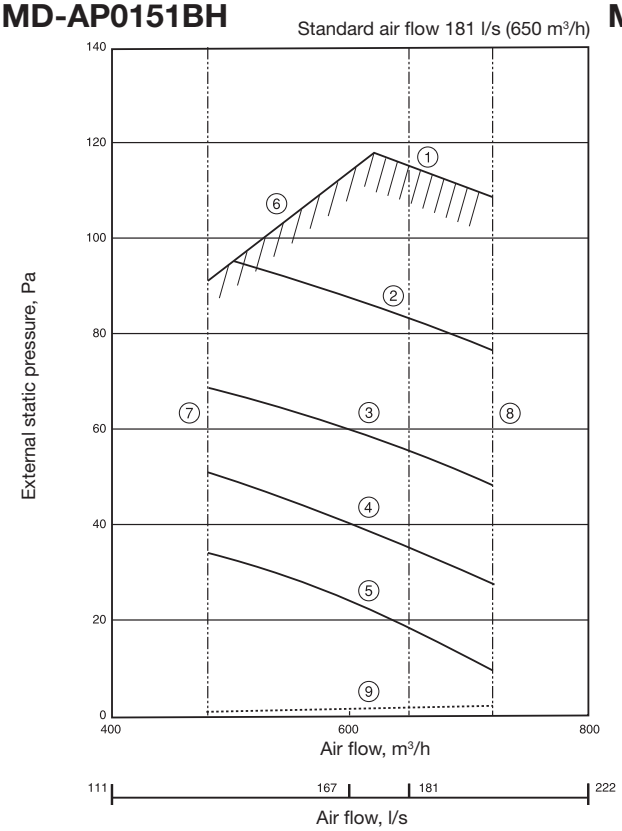

MMD-AP0181BH

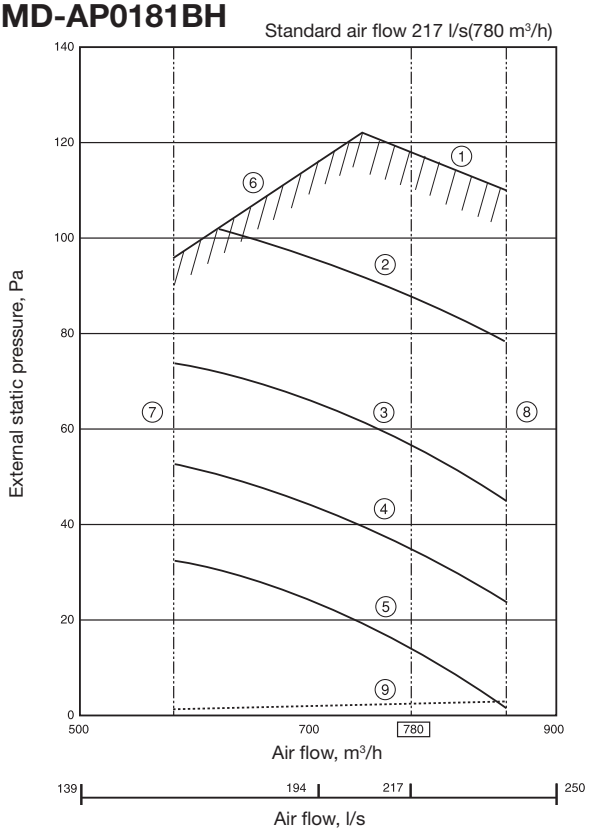

Legend

1. High static pressure 2H tap
2. High static pressure 1H tap
3. Standard H tap
4. Low static pressure H tap
5. Standard L tap
6. Application limit
7. Lower air flow limit
8. Upper air flow limit
9. Long life filter

MMD-AP0241BH, AP0271BH

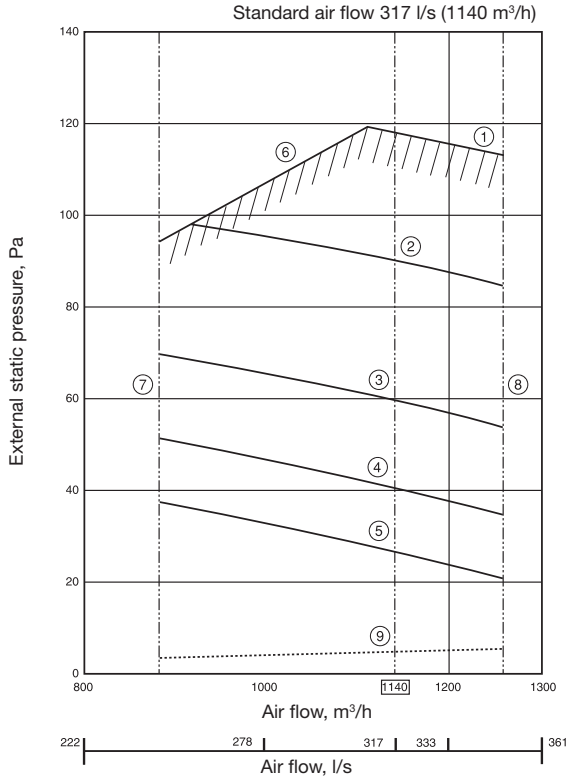

MMD-AP0301BH

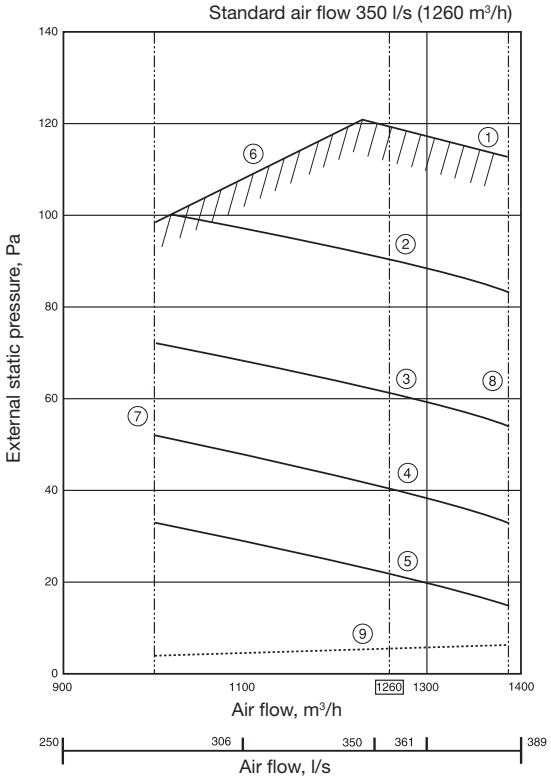

MMD-AP0361BH

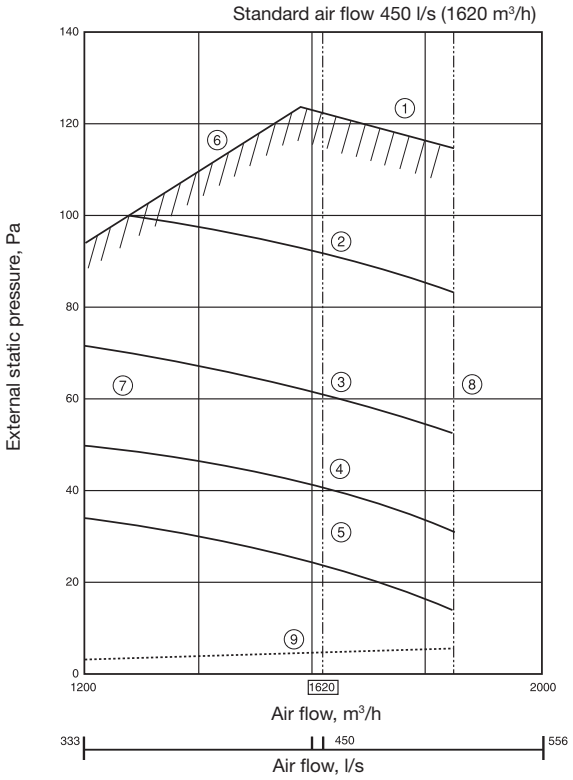

MMD-AP0481BH, AP0561BH

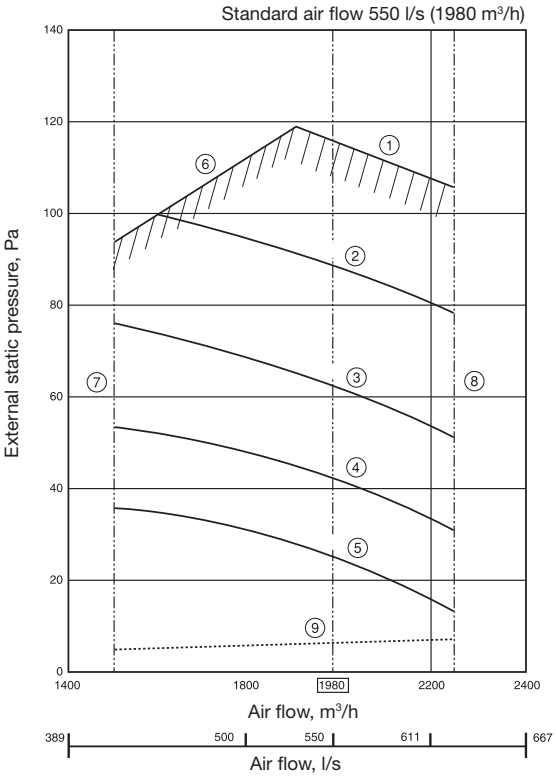

Legend

1. High static pressure 2H tap
2. High static pressure 1H tap
3. Standard H tap
4. Low static pressure H tap
5. Standard L tap
6. Application limit
7. Lower air flow limit
8. Upper air flow limit
9. Long life filter

High-pressure ducted unit

MMD-AP0181H

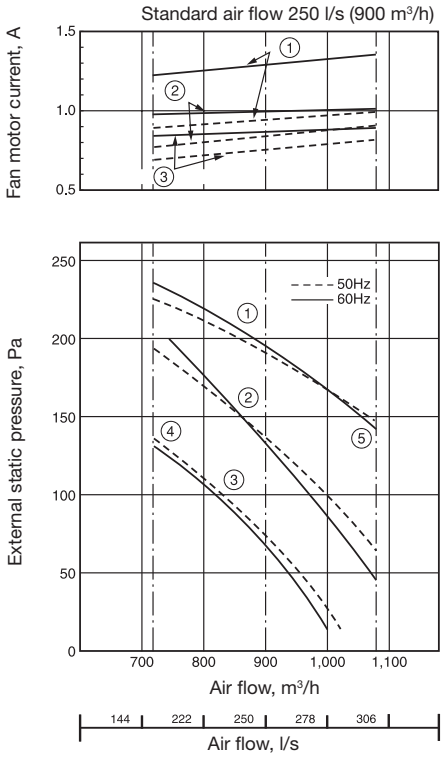

MMD-AP0241H, AP0271H

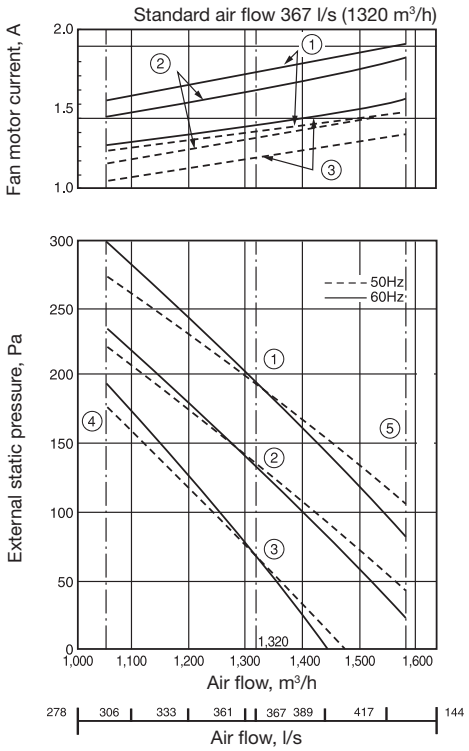

MMD-AP0361H

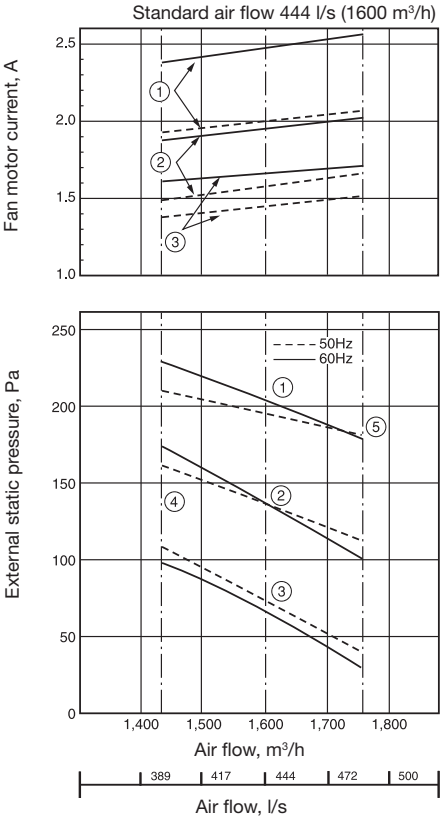

MMD-AP0481H

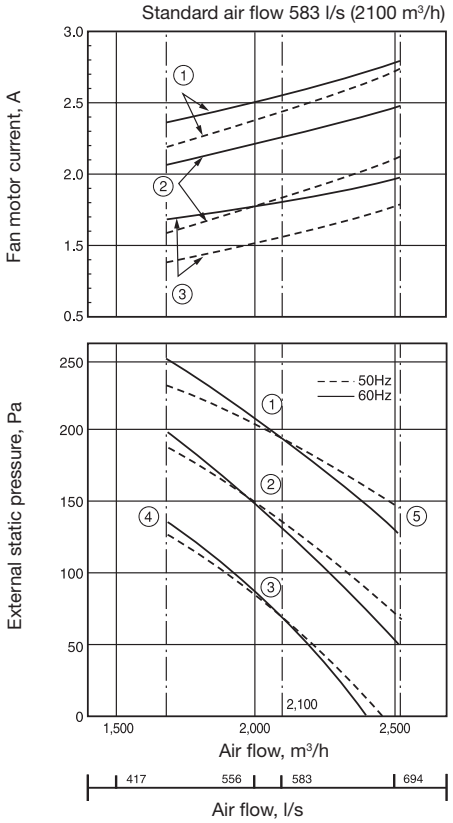

Legend

1. High static pressure tap
2. Medium static pressure tap
3. Low static pressure tap
4. Lower air flow limit
5. Upper air flow limit

MMD-AP0721H

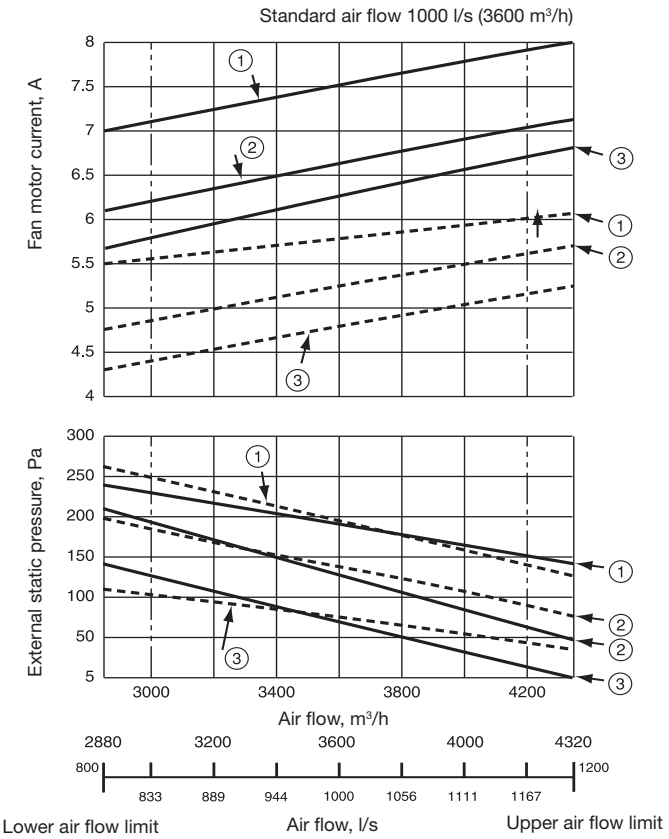

MMD-AP0961H

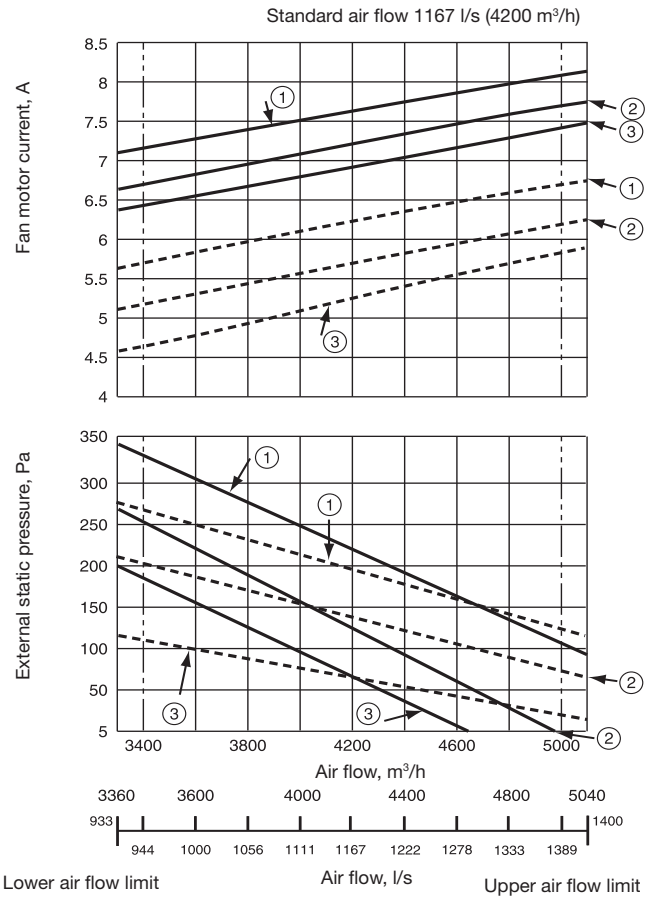

1. High static pressure tap
2. Medium static pressure tap
3. Low static pressure tap

Add an air flow damper to the air supply duct, and adjust the air flow in the range from 80% to 120% of the standard air flow rate.

Slim duct unit

MMD-AP0071SPH, AP0091SPH

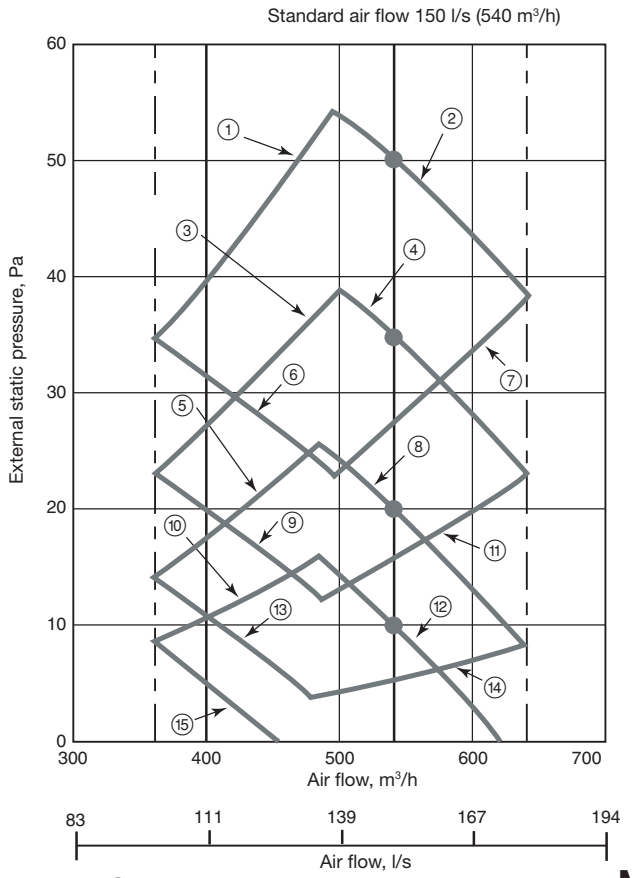

MMD-AP0121SPH

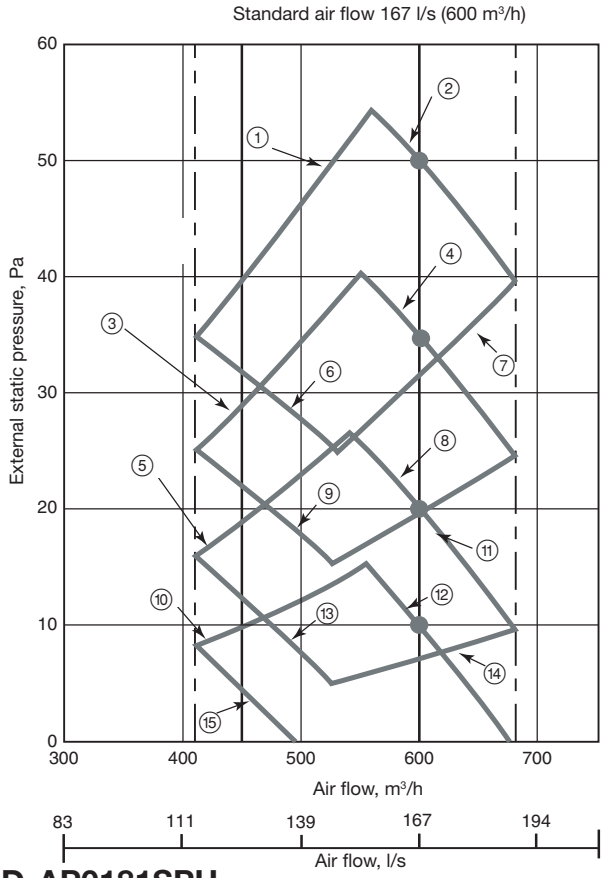

MMD-AP0151SPH

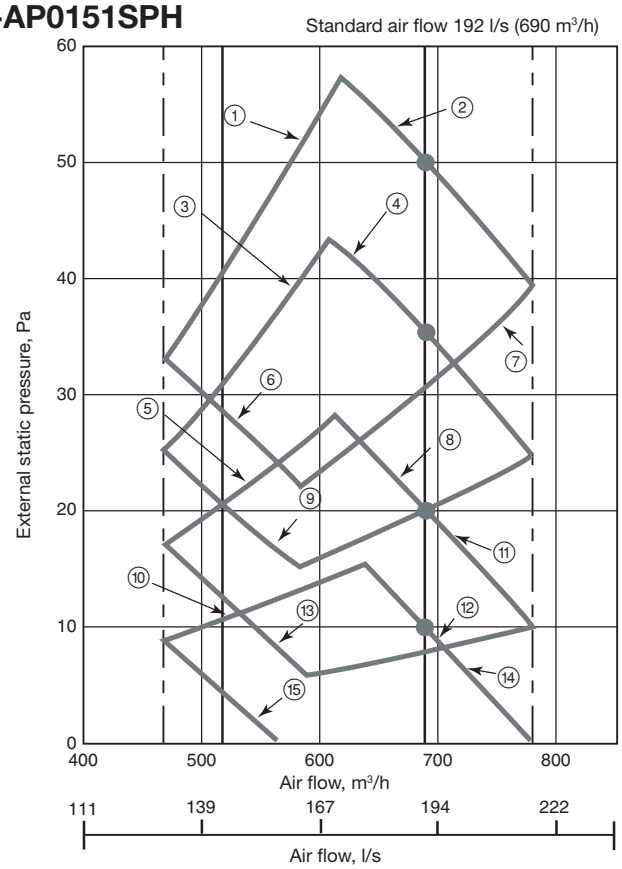

MMD-AP0181SPH

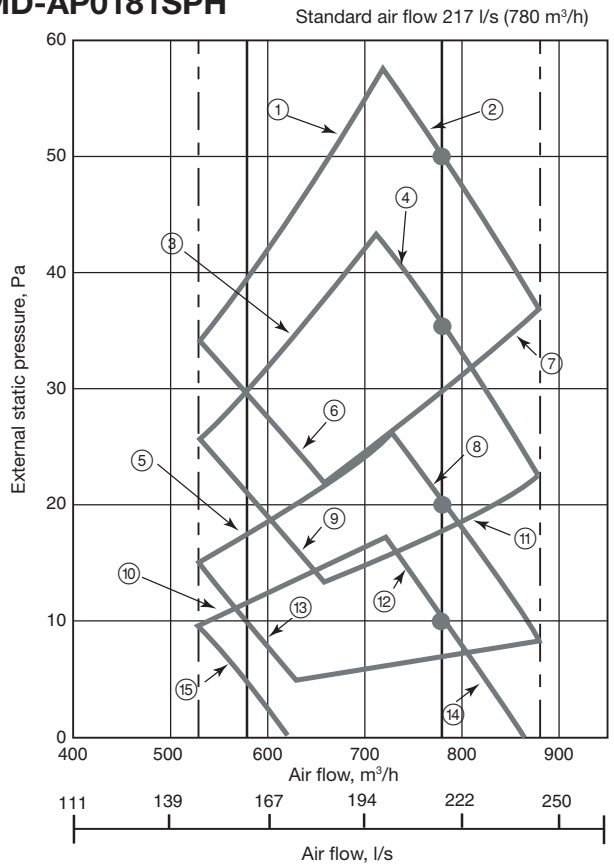

Legend

1. Upper limit of external static pressure (50 Pa)
2. High (50 Pa)
3. Upper limit of external static pressure (35 Pa)
4. High (35 Pa)
5. Upper limit of external static pressure (20 Pa)
6. Low (50 Pa)
7. Lower limit of external static pressure (50 Pa)
8. High (20 Pa)
9. Low (35 Pa)
10. Upper limit of external static pressure (10 Pa)
11. Upper limit of external static pressure (35 Pa)
12. High (10 Pa)
13. Low (20 Pa)
14. Lower limit of external static pressure (20 Pa)
15. Low (10 Pa)

Slim duct unit - with filter attached

MMD-AP0071SPH, AP0091SPH

Standard air flow 150 l/s (540 m³/h)

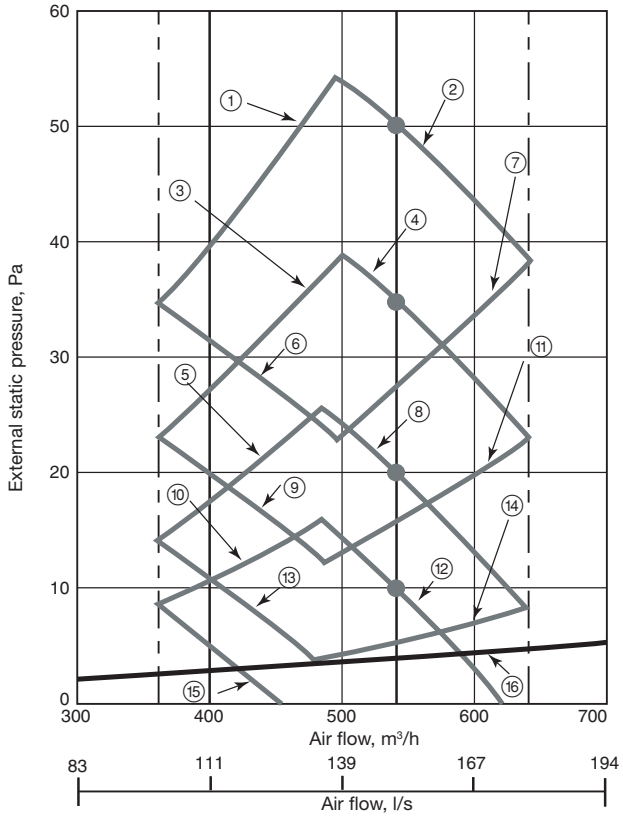

MMD-AP0121SPH

Standard air flow 167 l/s (600 m³/h)

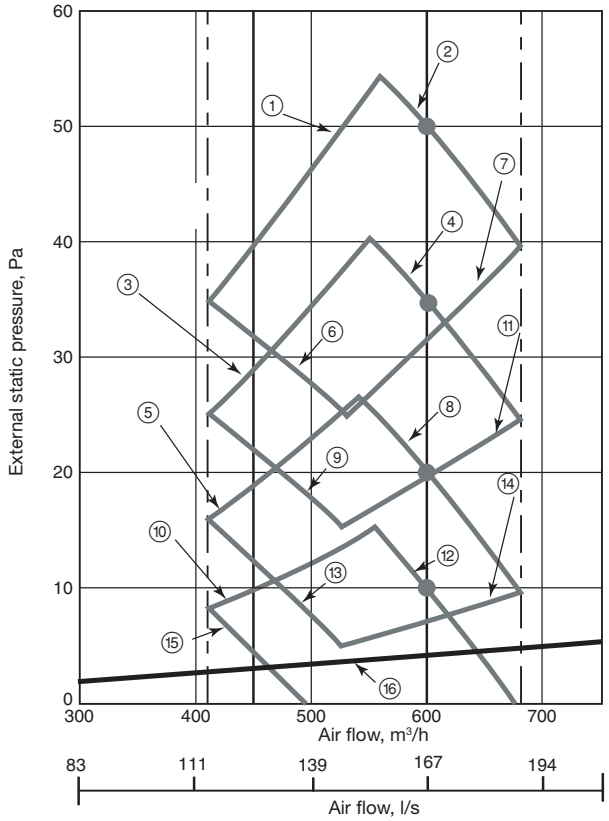

MMD-AP0151SPH

Standard air flow 192 l/s (690 m³/h)

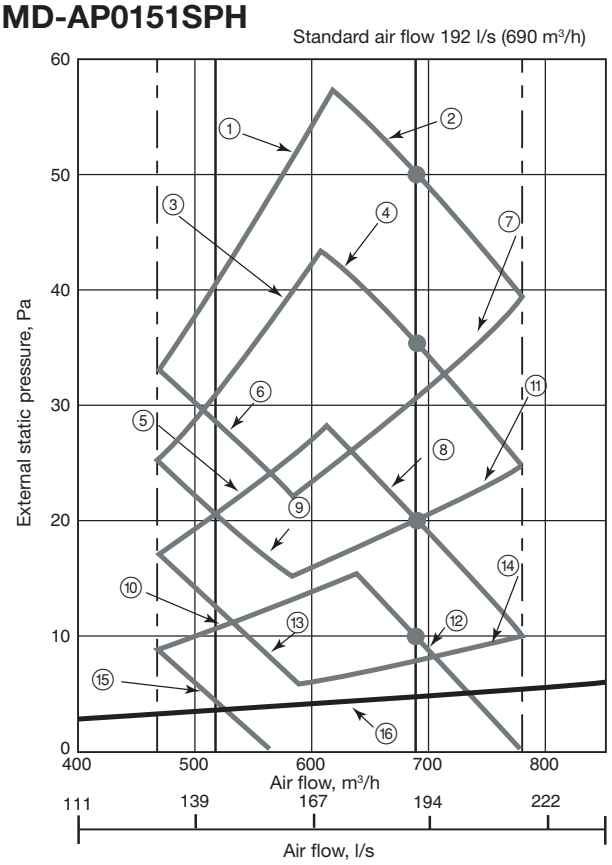

MMD-AP0181SPH

Standard air flow 217 l/s (780 m³/h)

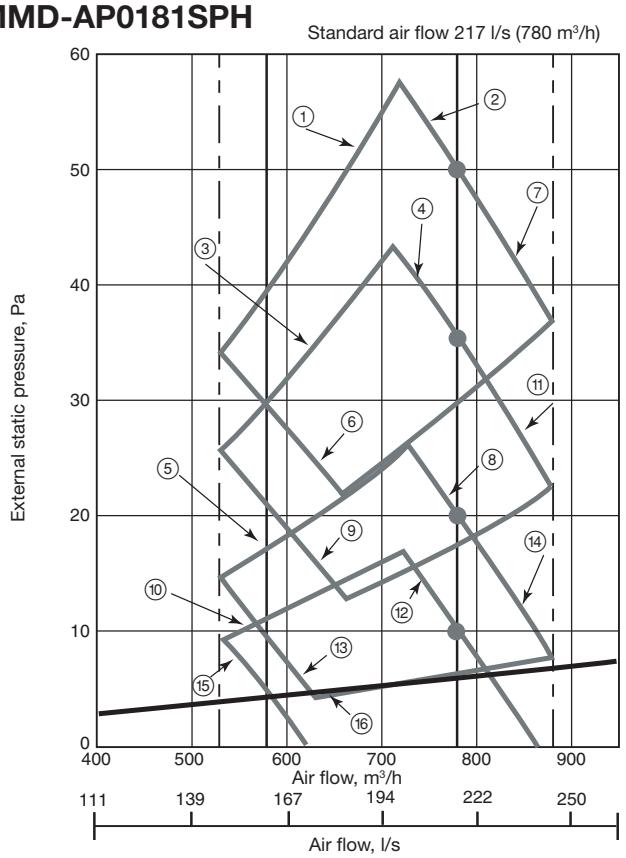

Legend

1. Upper limit of external static pressure (50 Pa)
2. High (50 Pa)
3. Upper limit of external static pressure (35 Pa)
4. High (35 Pa)
5. Upper limit of external static pressure (20 Pa)
6. Low (50 Pa)
7. Lower limit of external static pressure (50 Pa)
8. High (20 Pa)
9. Low (35 Pa)
10. Upper limit of external static pressure (10 Pa)
11. Upper limit of external static pressure (35 Pa)
12. High (10 Pa)
13. Low (20 Pa)
14. Lower limit of external static pressure (20 Pa)
15. Low (10 Pa)
16. Standard filter pressure loss

11. Dimensional drawings

Indoor unit - 4-way ceiling cassette

MMU-AP0091H to P0561H

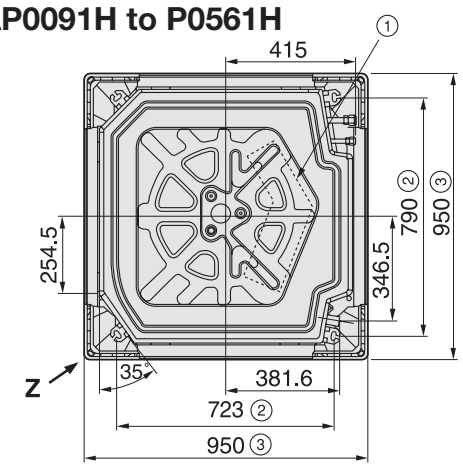

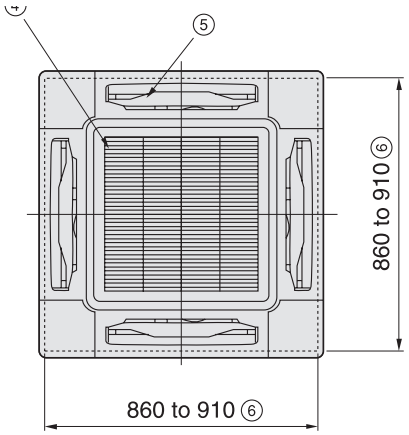

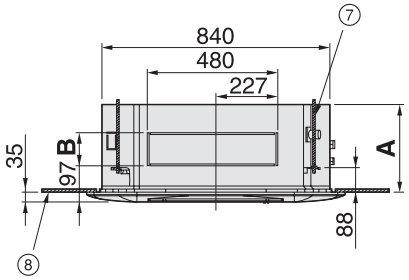

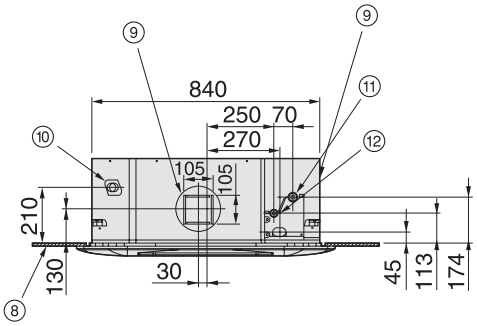

Model	A	B
AP0091H-AP0301H	250	120
AP0361H-AP0561H	319	183

Z view

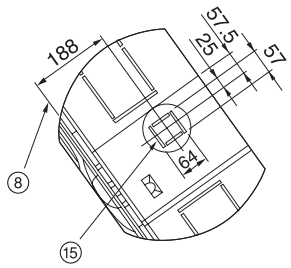

Drain riser pipe size

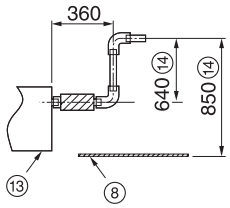

Note: As ABS is used for the drain discharge of the main unit, the vinyl chloride paste cannot be used. Use the flexible hose included in the package.

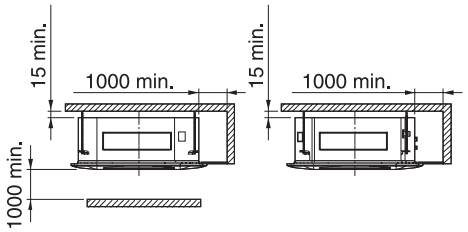

Wired remote controller (RBC-AMT31E)

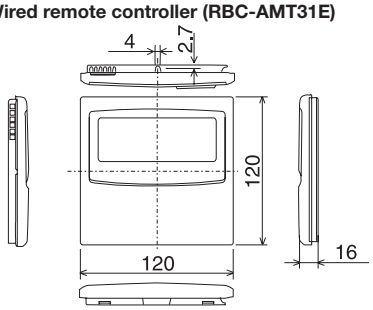

Space required for installation and servicing

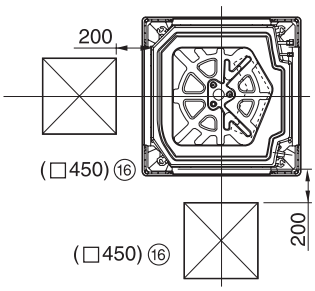

Legend

1. Control box
2. Hanging bolt pitch
3. Overall panel dimension
4. Air inlet
5. Air outlet (4-way)
6. Ceiling opening
7. Hanging bolt M10 or W3/8 field-supplied
8. Bottom ceiling surface
9. For square branch duct knockout Ø150 (2 positions at right side)
10. Drain connection
11. Refrigerant pipe connection (gas)
12. Refrigerant pipe connection (liquid)
13. Indoor unit
14. Riser
15. Knockout for simple outdoor air for ø100
16. Inspection hole

All dimensions are given in mm.

Indoor unit - 2-way ceiling cassette

MMU-AP0071WH, AP0091WH, AP0121WH

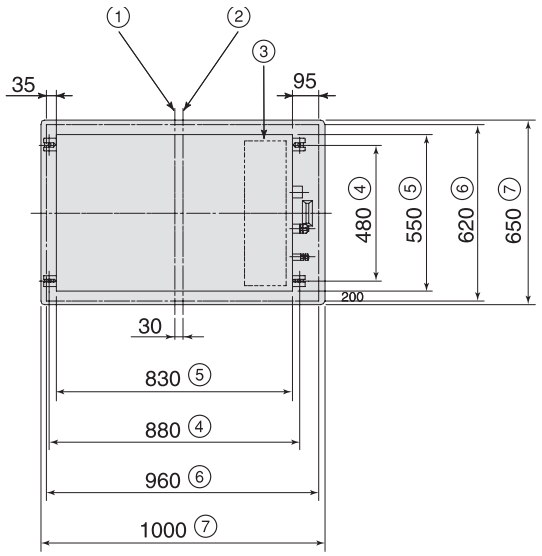

Z view

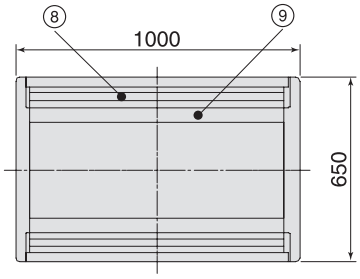

Space required for installation and servicing

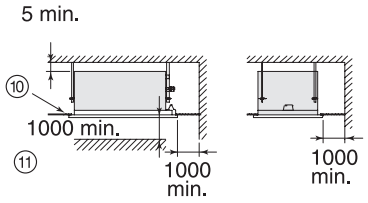

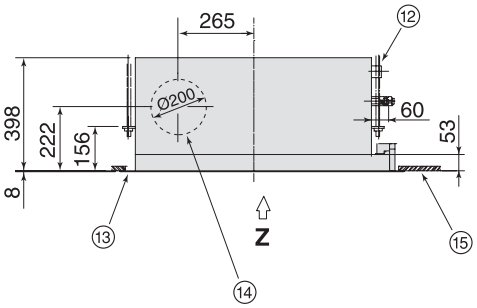

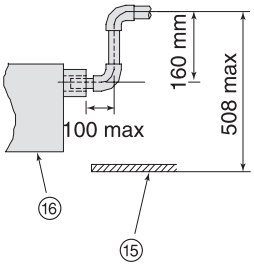

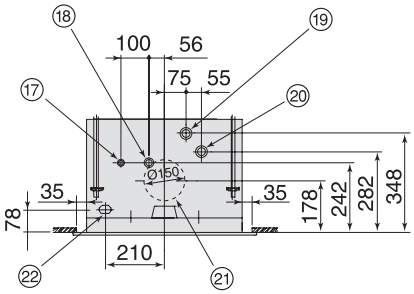

Legend

1. Centre of main unit
2. Centre of panel
3. Control box
4. Hanging bolt pitch
5. Unit dimension
6. Ceiling opening
7. Overall panel dimension
8. Air outlet (2-way)
9. Air inlet (2-way)
10. Ceiling
11. Obstruction
12. Hanging bolt 4-M10 field-supplied
13. Ceiling panel field-supplied
14. Branch duct knockout hole (also on the reverse side)
15. Bottom ceiling surface
16. Indoor unit
17. Refrigerant pipe connection (liquid Ø1/4")
18. Refrigerant pipe connection (gas Ø3/8")
19. Drain pipe connection (inner Ø32, nominal Ø25) for vinyl chloride pipe
20. Drain test point
21. Knockout hole for air intake (only on reverse side)
22. Power supply connection

All dimensions are given in mm.

Indoor unit - 2-way ceiling cassette

MMU-AP0151WH, AP0181WH, AP0241WH, AP0271WH, AP0301WH

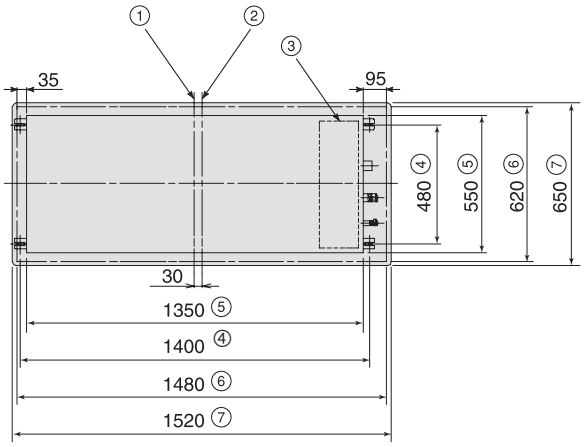

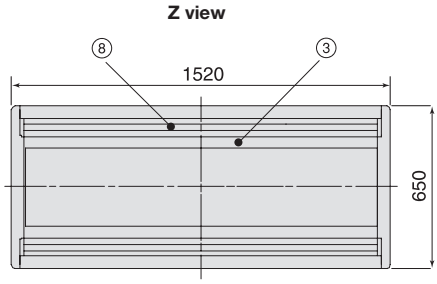

Space required for installation and servicing

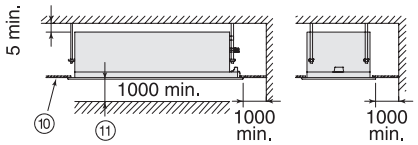

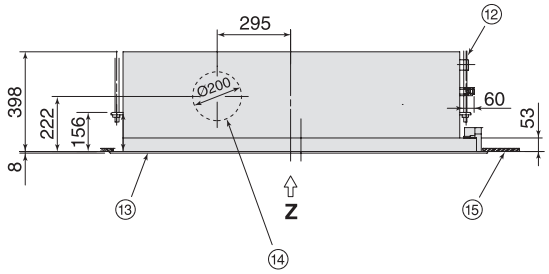

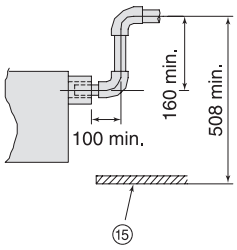

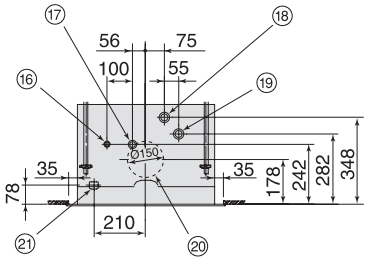

Model	ØA	ØB
MMU-AP0151WH to AP0181WH	1/4”	1/2”
MMU-AP0241WH to AP0301WH	3/8”	5/8”

Legend

1. Centre of main unit
2. Centre of panel
3. Control box
4. Hanging bolt pitch
5. Unit dimension
6. Ceiling opening
7. Overall panel dimension
8. Air outlet (2-way)
9. Air inlet (2-way)
10. Ceiling
11. Obstruction
12. Hanging bolt 4-M10 field-supplied
13. Ceiling panel field-supplied
14. Branch duct knockout hole (also on the reverse side)
15. Bottom ceiling surface
16. Refrigerant pipe connection (liquid ØA)
17. Refrigerant pipe connection (gas ØB)
18. Drain pipe connection (inner Ø32, nominal Ø25) for vinyl chloride pipe
19. Drain test point
20. Knockout hole for air intake (only on reverse side)
21. Power supply connection

All dimensions are given in mm.

Indoor unit - 2-way ceiling cassette

MMU-AP0481WH

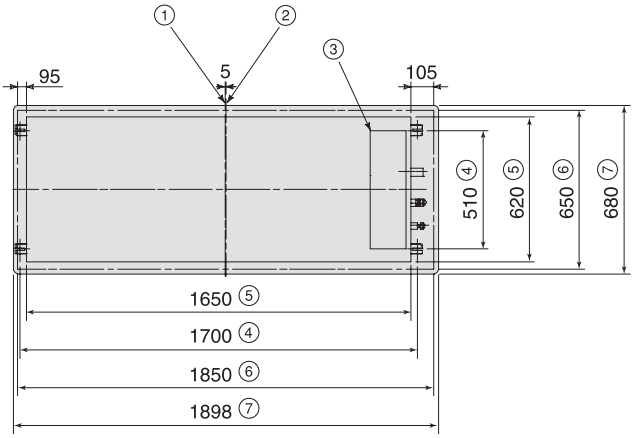

Z view

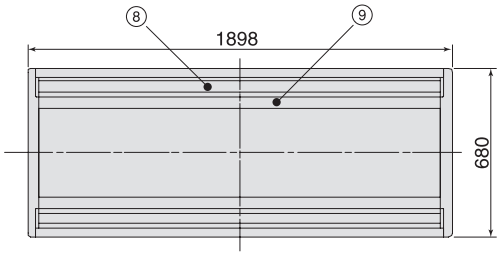

Space required for installation and servicing

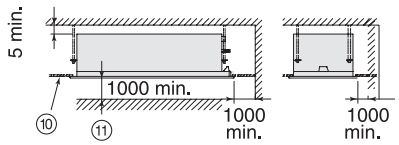

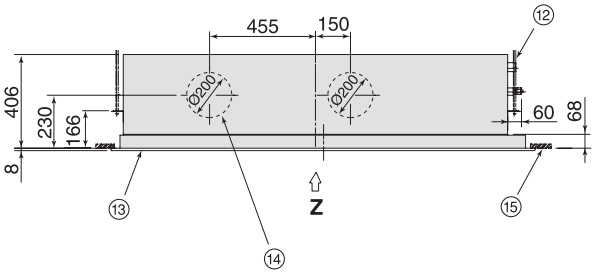

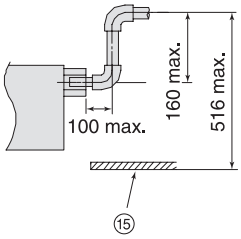

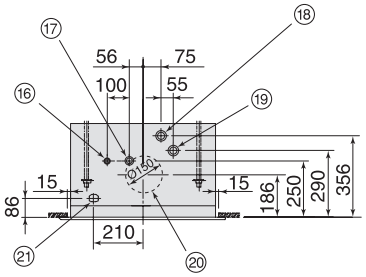

Wired remote controller (RBC-AMT31E)

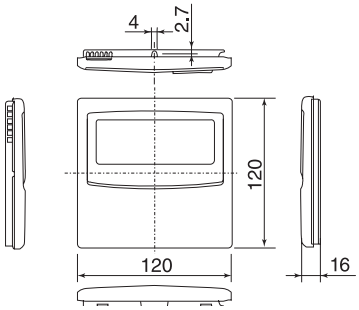

Legend

1. Centre of main unit
2. Centre of panel
3. Control box
4. Hanging bolt pitch
5. Unit dimension
6. Ceiling opening
7. Overall panel dimension
8. Air outlet (2-way)
9. Air inlet (2-way)
10. Ceiling
11. Obstruction
12. Hanging bolt 4-M10 field-supplied
13. Ceiling panel field-supplied
14. Branch duct knockout hole (also on the reverse side)
15. Bottom ceiling surface
16. Refrigerant pipe connection (liquid Ø3/8")
17. Refrigerant pipe connection (gas Ø5/8")
18. Drain pipe connection (VP25)
19. Drain test point
20. Knockout hole for air intake (only on reverse side)
21. Power supply connection

All dimensions are given in mm.

Indoor unit - 1-way ceiling cassette

MMU-AP0071YH, AP0091YH, AP0121YH

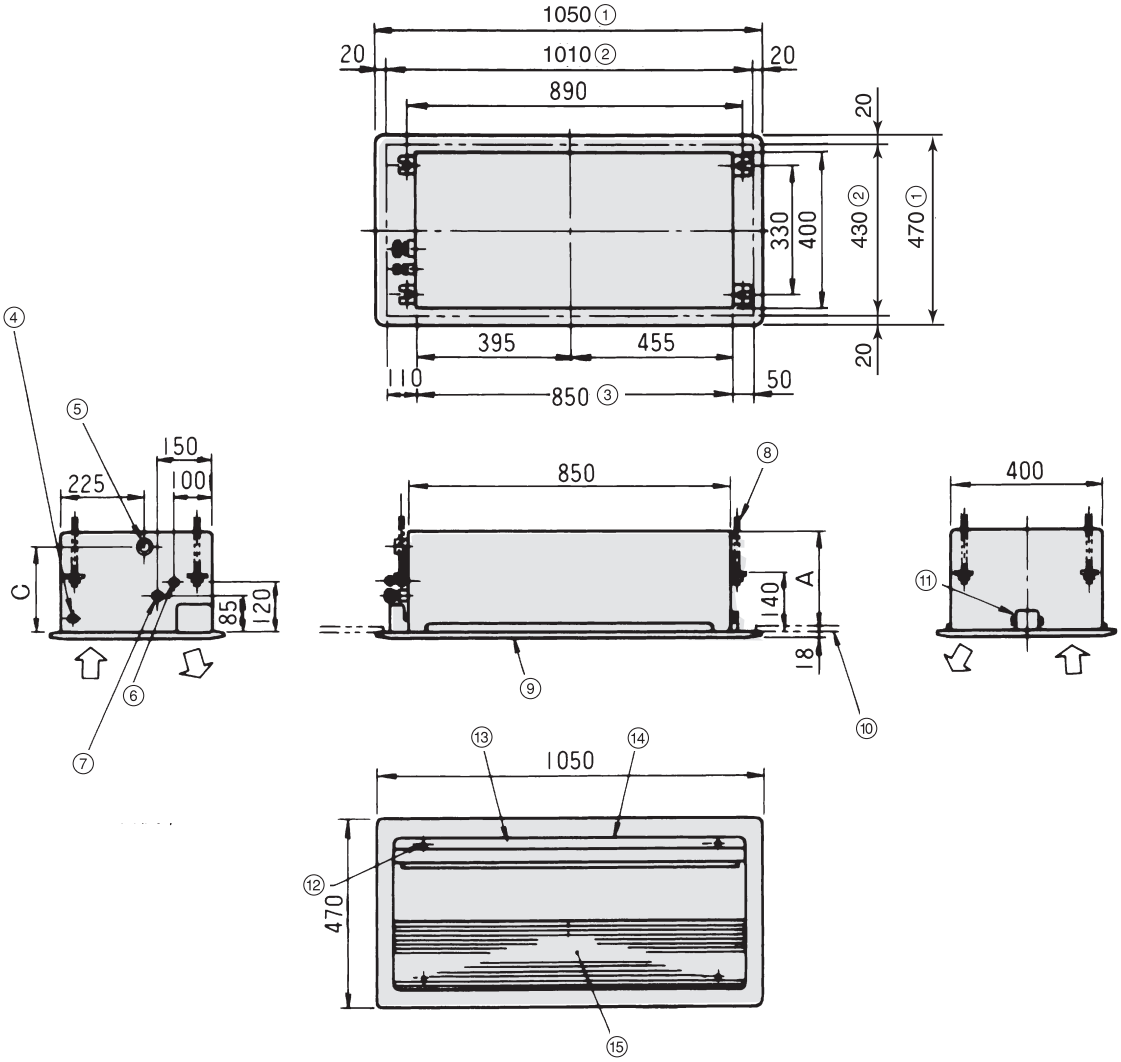

Model MMU-	A	B	C
AP0071YH, AP0091YH, AP0121YH	235	245	200

Wired remote controller (RBC-AMT31E)

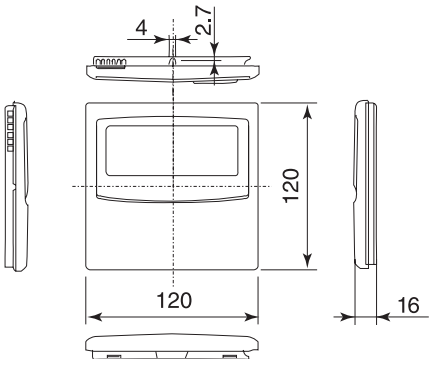

Space required for installation and servicing

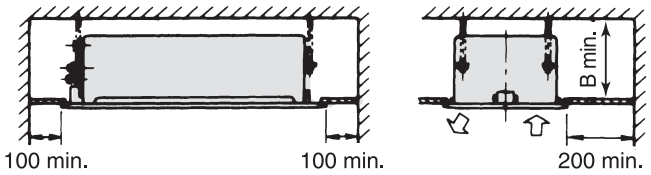

Legend

1. Overall panel dimension
2. Ceiling opening
3. Centre of panel
4. Power supply connection
5. Drain pipe connection (VP25)
6. Refrigerant pipe connection (gas Ø3/8")
7. Refrigerant pipe connection (liquid Ø1/4")
8. Hanging bolt 4-M10 field-supplied
9. Ceiling panel field-supplied
10. Bottom ceiling surface
11. Support metal
12. Panel mounting hole 5 positions
13. Discharge louvre
14. Air outlet
15. Air inlet

All dimensions are given in mm.

Indoor unit - 1-way ceiling cassette

MMU-AP0151SH, AP0181SH, AP0241SH

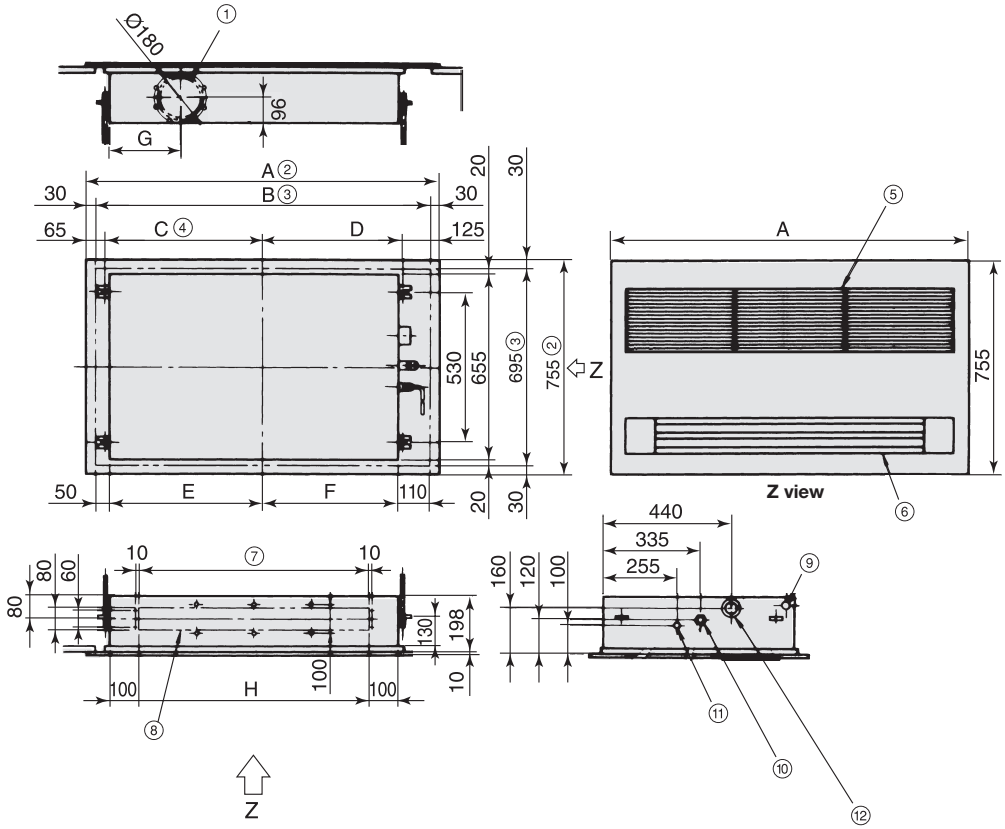

Model MMU-	A	B	C	D	E	F	G	H	ØI	ØJ	N
AP0151SH, AP0181SH	1220	1160	545	485	530	470	254	800	1/4”	1/2”	4
AP0241SH	1420	1360	645	585	630	570	460	1000	3/8”	5/8”	5

Space required for installation and servicing

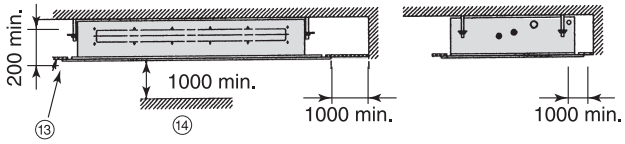

Wired remote controller (RBC-AMT31E)

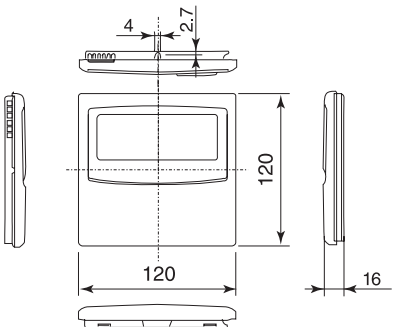

Legend

1. Ø150 knockout hole (for air intake)
2. Overall panel dimension
3. Ceiling opening
4. Centre of panel
5. Air inlet
6. Air outlet
7. Pitch 200 x N
8. Knockout for front discharge
9. Power supply connection
10. Refrigerant pipe connection (gas ØJ)
11. Refrigerant pipe connection (liquid ØI)
12. Drain pipe connection (VP25)
13. Ceiling
14. Obstruction

All dimensions are given in mm.

Indoor unit - standard ducted unit

MMD-AP0071BH, AP0091BH, AP0121BH, AP0151BH, AP0181BH, AP0241BH, AP0271BH, AP0301BH, AP0361BH, AP0481BH, AP0561BH

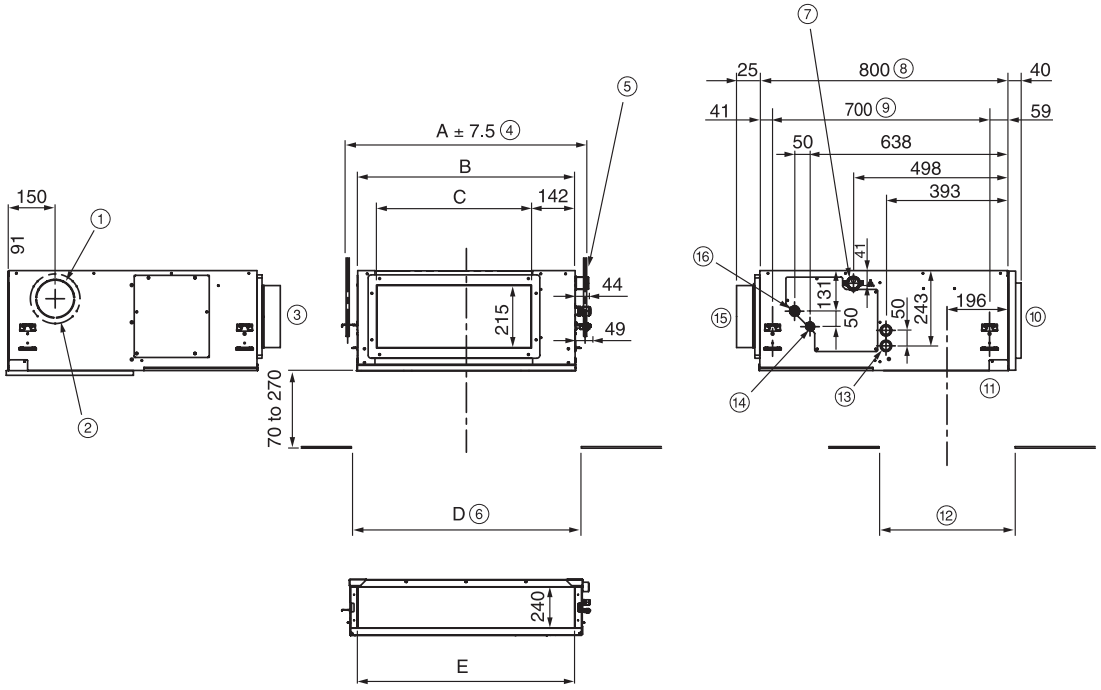

Model MMD-	A	B	C	D	E	ØF	ØG
AP0071BH, AP0091BH, AP0121BH	616	550	350	600	470	3/8”	1/4”
AP0151BH, AP0181BH	766	700	500	750	620	1/2”	3/8”
AP0241BH, AP0271BH, AP0301BH	1066	1000	800	1050	920	5/8”	3/8”
AP0361BH, AP0481BH, AP0561BH	1416	1350	1150	1400	1270	5/8”	3/8”

Note: High-efficiency and deodorant filters cannot be used together.

Note: Be sure to provide an inspection hole A in the position indicated in the following figure for maintenance of the equipment.

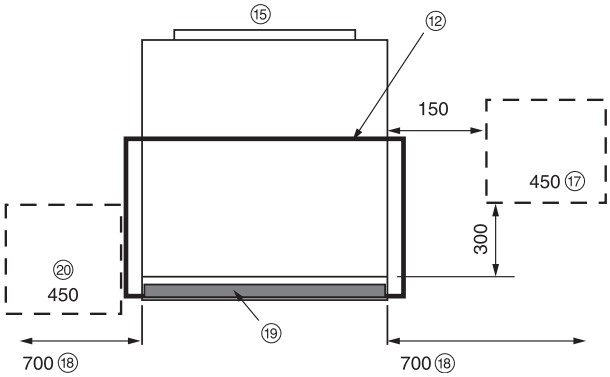

Drain riser pipe

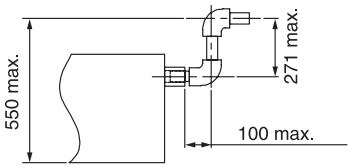

Legend

1. Ø125 knockout hole (for air intake)
2. 10-Ø4 tapping screw Ø160
3. When attaching directly
4. Hanging bolt pitch
5. Hanging bolt 4-M10 (field-supplied)
6. Ceiling opening
7. Drain pipe connection (inner Ø32 vinyl chloride pipe VP25 connection)
8. Unit dimension
9. Hanging bolt pitch
10. Air inlet
11. Panel CL
12. Ceiling opening
13. Ø26 power supply, remote controller cable conduit
14. Refrigerant pipe connection (liquid ØG)
15. Air outlet
16. Refrigerant pipe connection (gas ØF)
17. Inspection hole A
18. For air filter maintenance
19. Air filter
20. Inspection hole B

All dimensions are given in mm.

Indoor unit - high-pressure ducted unit

MMD-AP0181H, AP0241H, AP0271H, AP0361H, AP0481H, AP0271H, AP0961H

MMD-AP0181H to AP0361H

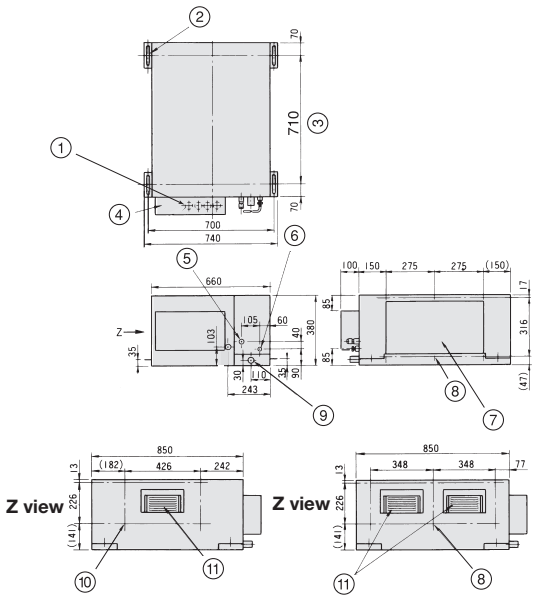

Models AP0181H-AP0271H Model AP0361H

Model MMD-	A	B
AP0181H	1/4”	1/2”
AP0241H, AP0271H, AP0361H, AP0481H	3/8”	5/8”

MMD-AP0481H

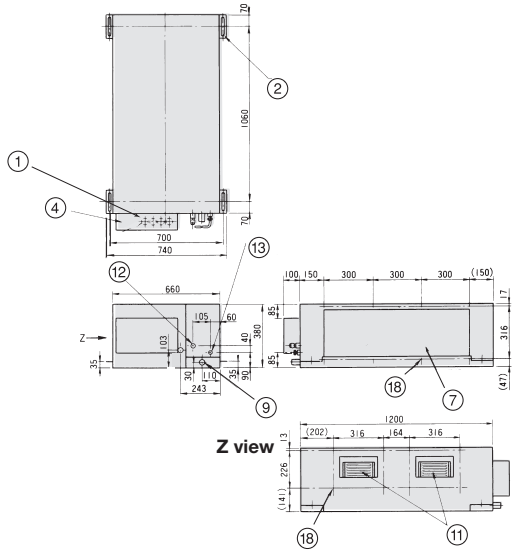

Space required for installation and servicing *1

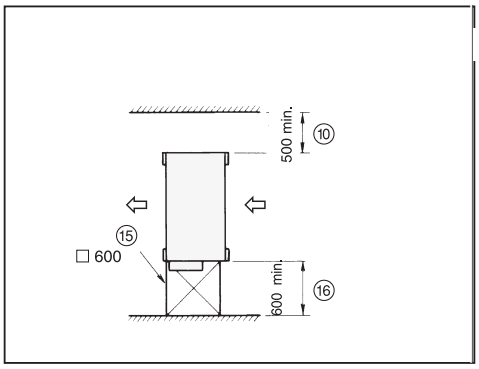

*1 Service spaces for MMD-AP0721H and AP0961H are different from those in the above figure. For enquiries please contact us separately.

MMD-AP0271H, AP0961H

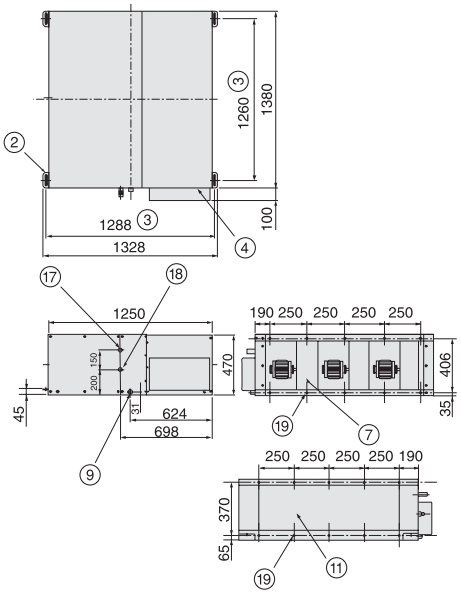

Wired remote controller (RBC-AMT31E)

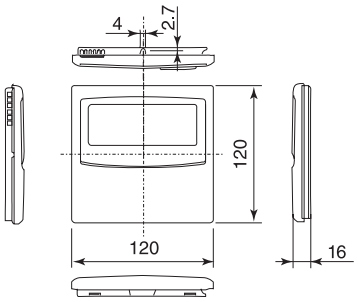

Legend

1. Power supply/communication piping (Ø26) (under control box)
2. Hanging bolt slot (4-Ø2 x 72)
3. Hanging bolt mounting pitch
4. Control box
5. Refrigerant pipe connection (gas ØB)
6. Refrigerant pipe connection (liquid ØA)
7. Air inlet
8. Screw hole for duct mounting (6-M6)
9. Drain pipe connection (VP25)
10. Screw hole for duct mounting (4-M6)
11. Air outlet
12. Refrigerant pipe connection (gas Ø5/8”)
13. Refrigerant pipe connection (liquid Ø3/8”)
14. Screw hole for duct mounting (8-M6)
15. Inspection area
16. Service space
17. Refrigerant pipe connection (gas Ø7/8”)
18. Refrigerant pipe connection (liquid Ø1/2”)
19. Screw hole for duct mounting (10-M6)

All dimensions are given in mm.

Indoor unit - slim duct unit

MMD-AP0071SPH, AP0091SPH, AP0121SPH, AP0151SPH, AP0181SPH

Bottom view complete with filter

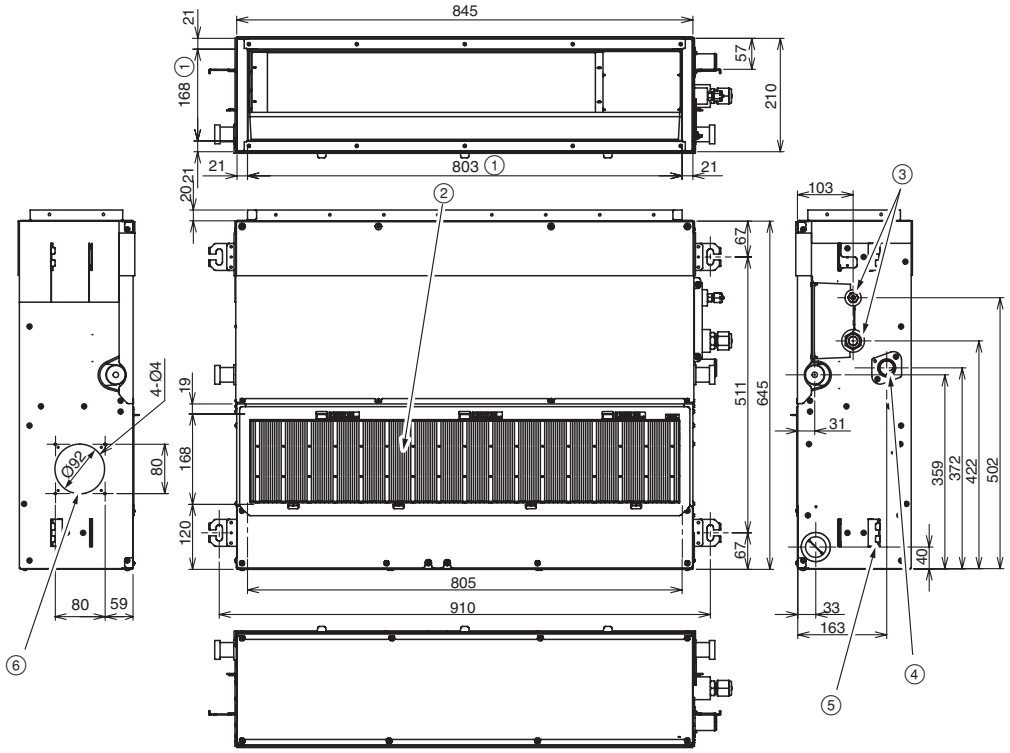

Bottom view excluding filter

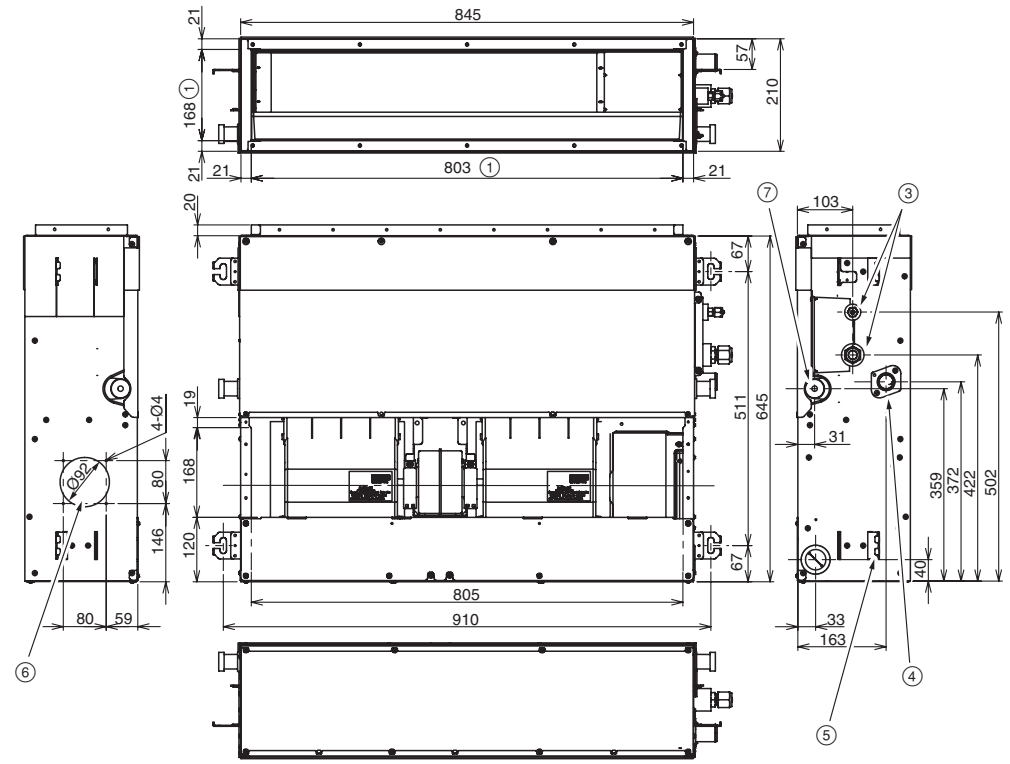

Legend

1. Inside dimension
2. Air filter
3. Refrigerant pipe connection
4. Drain pipe connection
5. Hanging plate
6. Fresh air inlet (knockout hole)
7. Drain pipe

All dimensions are given in mm.

Indoor unit - ceiling-suspended unit

MMC-AP0151H, AP0181H, AP0241H, AP0271H, AP0361H, AP0481H

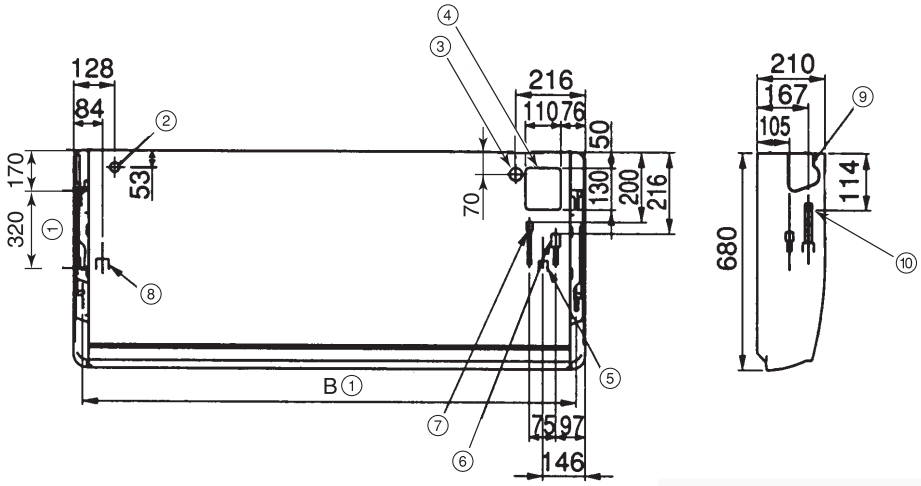

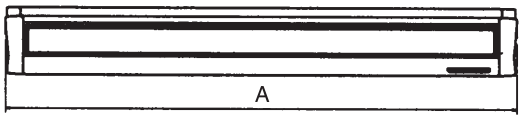

Model MMC-	A	B	ØC	ØD
AP0151H, AP0181H	910	855	1/2”	1/4”
AP0241H to AP0271H	1180	1125	5/8”	3/8”
AP0361H, AP0481H	1595	1540	5/8”	3/8”

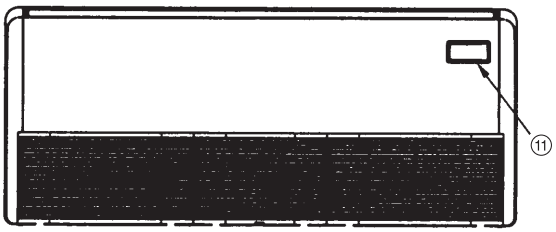

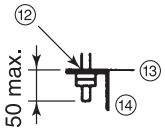

Space required for installation and servicing

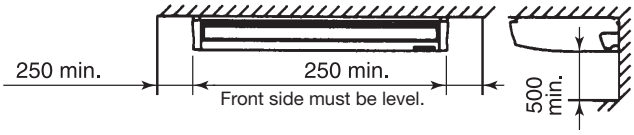

Wired remote controller (RBC-AMT31E)

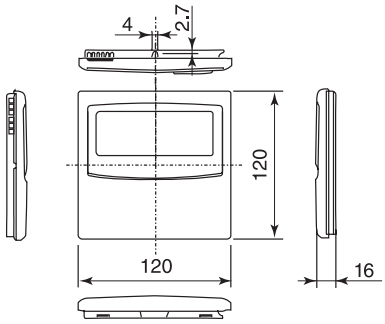

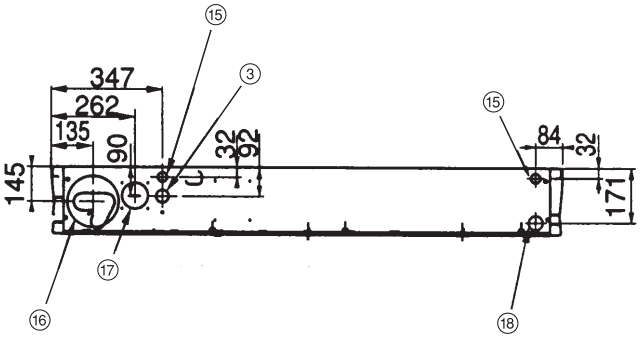

Legend

1. Hanging position
2. Remote controller cable conduit (knockout hole)
3. Power supply cable inlet (knockout hole)
4. Upper cable conduit (knockout hole)
5. Drain pipe connection
6. Refrigerant pipe connection (gas ØC)
7. Refrigerant pipe connection (liquid ØD)
8. Left side drain
9. Cable conduit (knockout hole)
10. Drain pipe connection (Inner diameter Ø26, hose attached)
11. Wireless sensor mounting section (option)
12. Hanging bolt
13. Ceiling surface
14. Unit
15. Remote controller cable conduit
16. Piping hole in the wall (Ø100 hole)
17. Air inlet (duct sold separately) (knockout hole Ø92)
18. Left drain piping conduit (knockout hole)

All dimensions are given in mm.

Indoor unit - high-wall unit (1 Series)

MMK-AP0071H, AP0091H, AP0121H

Position of installation board hole

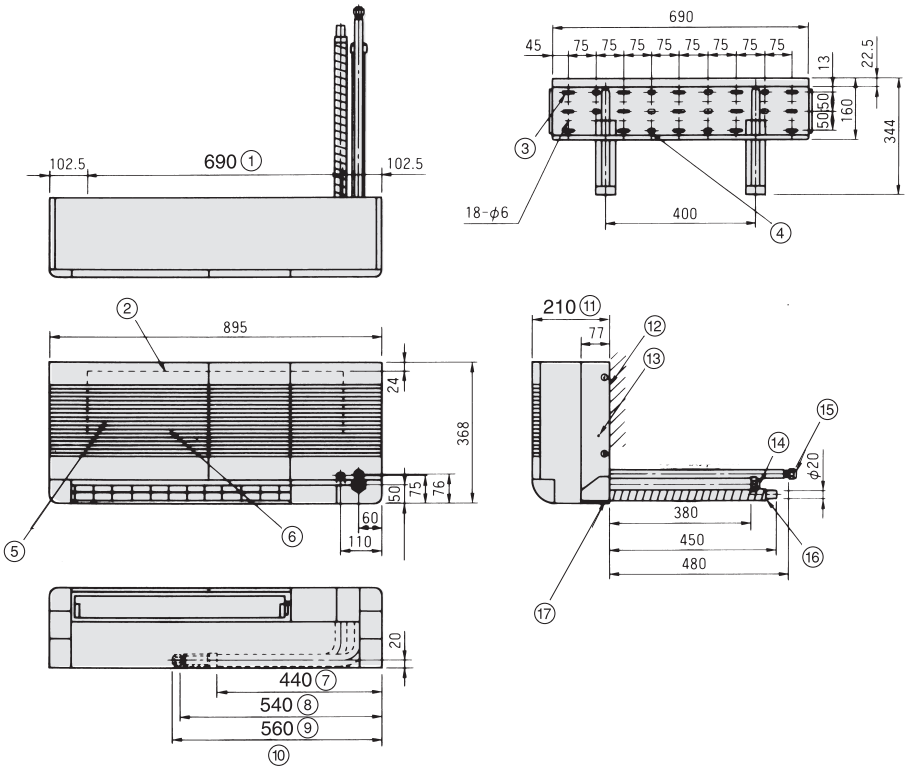

Space required for service

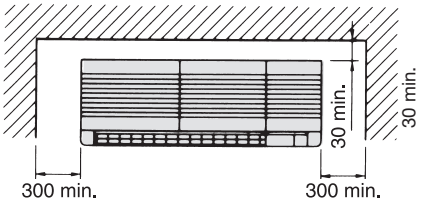

Wired remote controller (RBC-AMT31E)

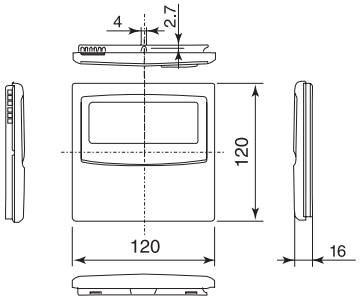

Legend

1. (Installation board)
2. Top of installation board
3. Wood screw slot 15-6 x 30
4. Anchor bolt slot 10-10 x 20
5. Air outlet
   Air flow direction adjustable (up/down/left/right)
6. Air inlet
7. Gas pipe
8. Liquid pipe
9. Drain pipe
10. Supplied with pipe outlet left
11. Including installation board
12. Including installation board (accessory)
13. Earth screw (M4) (inside control box)
14. Refrigerant pipe connection (gas Ø3/8")
15. Refrigerant pipe connection (liquid Ø1/4")
16. Drain pipe connection
17. Pipe outlet left/right side (knockout hole)

All dimensions are given in mm.

Indoor unit - high-wall unit (1 Series)

MMK-AP0151H, AP0181H

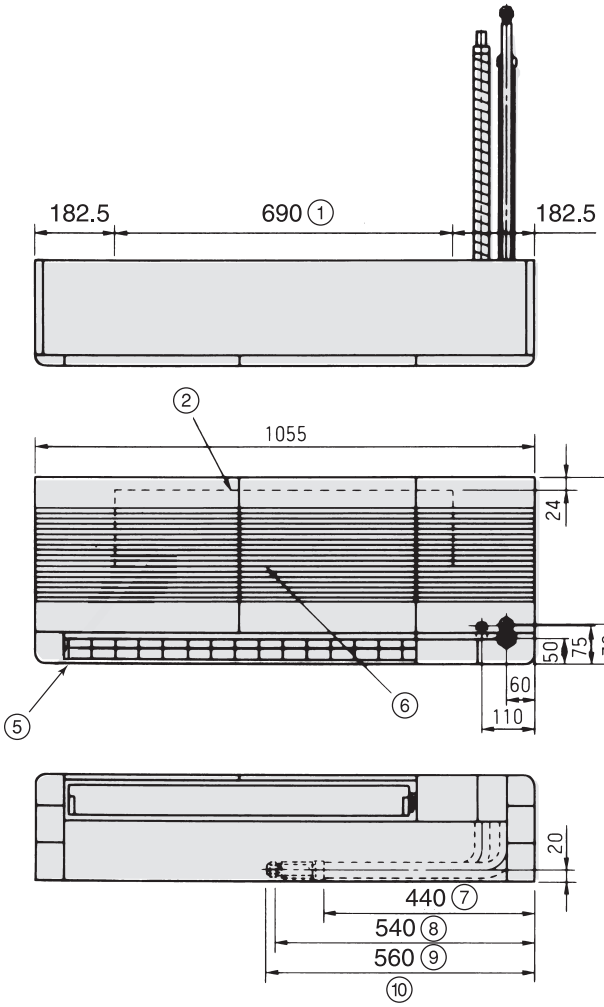

Position of installation board hole

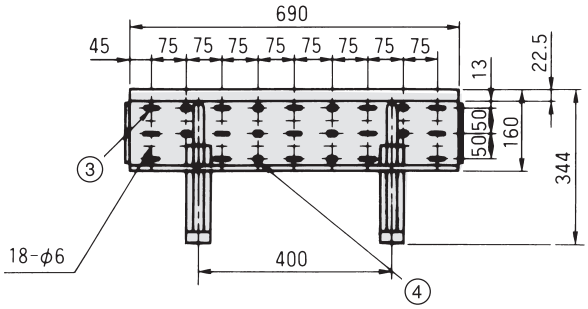

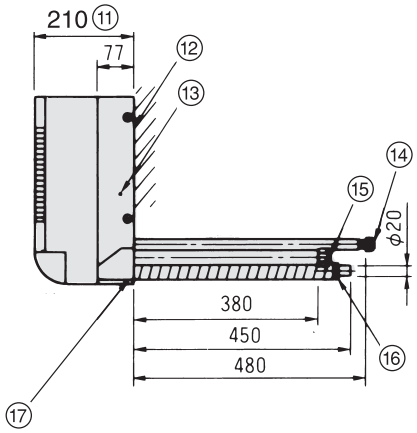

Space required for service

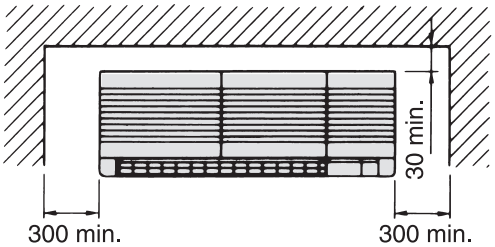

Legend

1. (Installation board)
2. Top of installation board
3. Wood screw slot 15-6 x 30
4. Anchor bolt slot 10-10 x 20
5. Air outlet
   Air flow direction adjustable (up/down/left/right)
6. Air inlet
7. Gas pipe
8. Liquid pipe
9. Drain pipe
10. Supplied with pipe outlet left
11. Including installation board
12. Including installation board (accessory)
13. Earth screw (M4) (inside control box)
14. Refrigerant pipe connection (gas Ø1/2")
15. Refrigerant pipe connection (liquid Ø1/4")
16. Drain pipe connection
17. Pipe outlet left/right side (knockout hole)

All dimensions are given in mm.

Indoor unit - high-wall unit (1 Series)

MMK-AP0241H

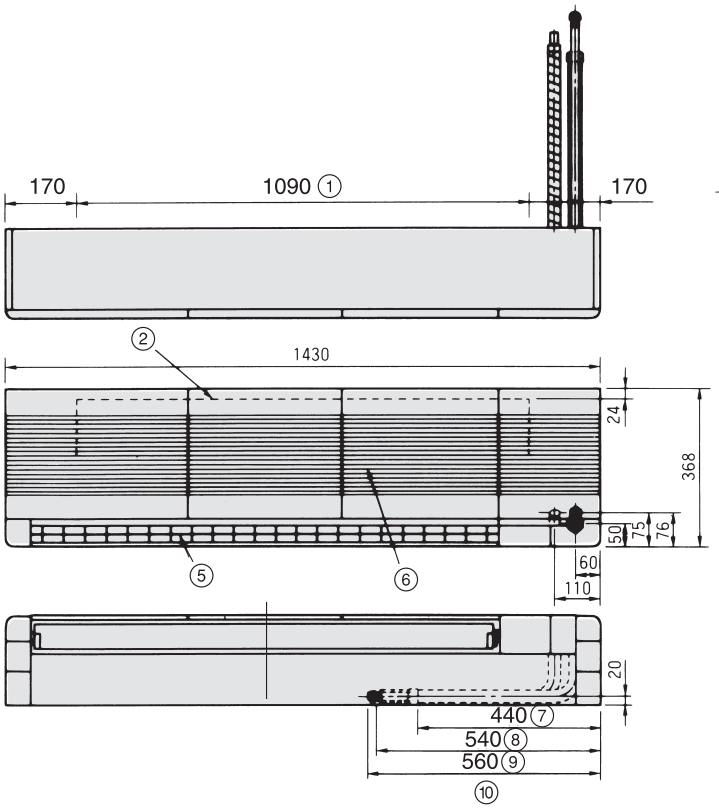

Position of installation board hole

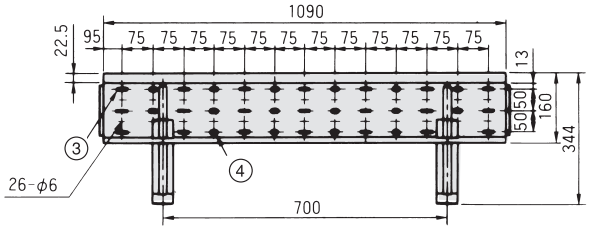

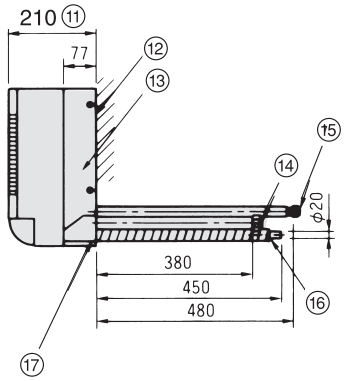

Space required for service

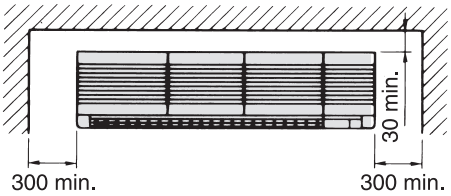

Legend

1. (Installation board)
2. Top of installation board
3. Wood screw slot 21-6 x 30
4. Anchor bolt slot 16-10 x 20
5. Air outlet
   Air flow direction adjustable (up/down/left/right)
6. Air inlet
7. Gas pipe
8. Liquid pipe
9. Drain pipe
10. Supplied with pipe outlet left
11. Including installation board
12. Including installation board (accessory)
13. Earth screw (M4) (inside control box)
14. Refrigerant pipe connection (gas Ø5/8")
15. Refrigerant pipe connection (liquid Ø3/8")
16. Drain pipe connection
17. Pipe outlet left/right side (knockout hole)

All dimensions are given in mm.

Indoor unit - high-wall unit (2 Series)

MMK-AP0072H, AP0092H, AP0122H

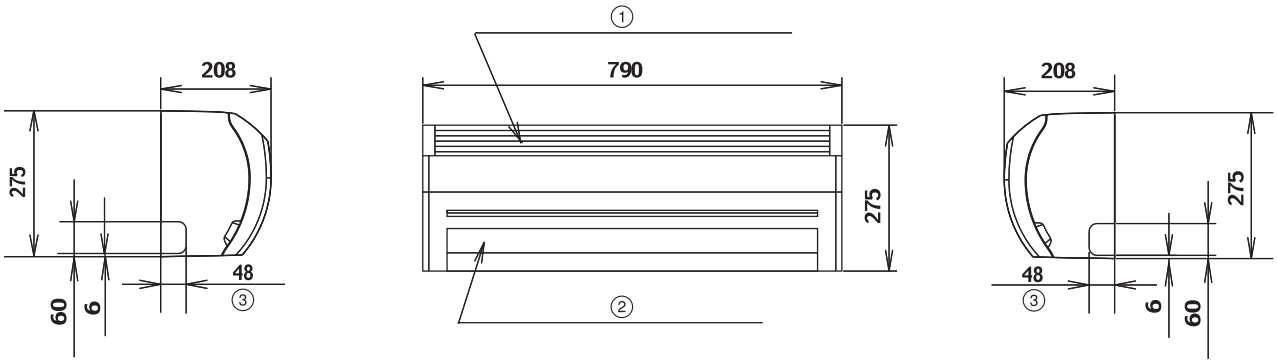

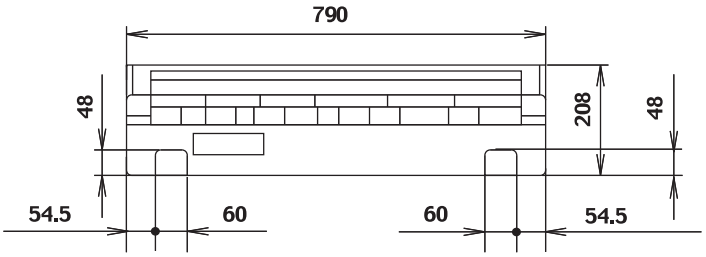

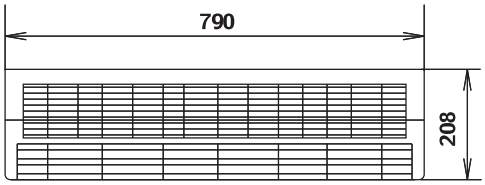

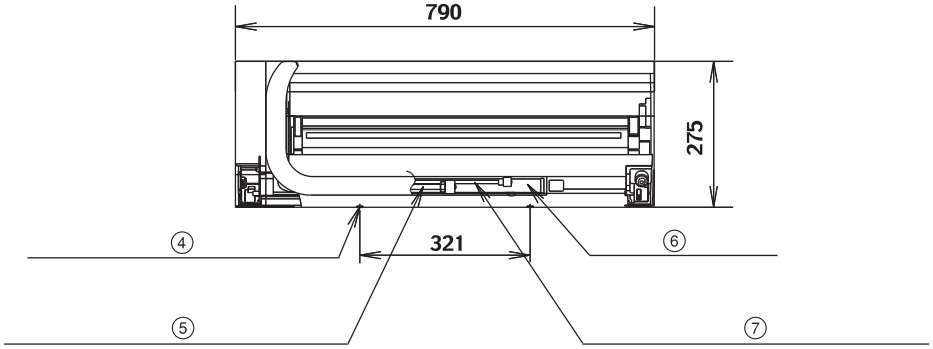

Space required for service

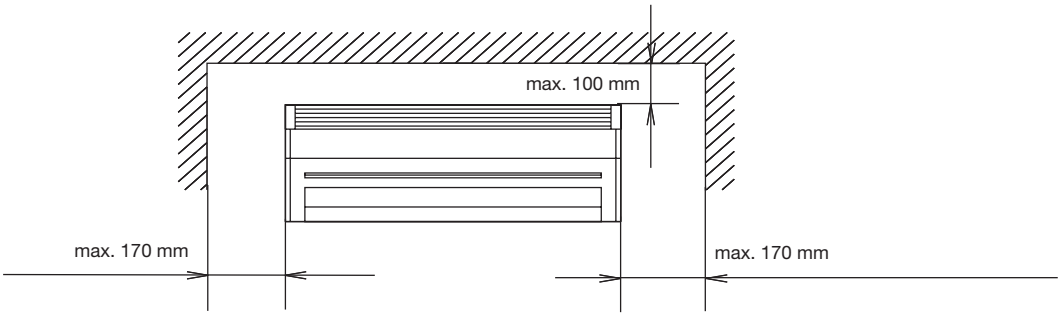

Legend

1. Air inlet
2. Air outlet
3. Knockout hole
4. Hook for insulation plate
5. Refrigerant pipe connection (gas Ø3/8”)
6. Drain pipe connection
7. Refrigerant pipe connection (liquid Ø1/4”)

All dimensions are given in mm.

Indoor unit - floor-mounted console unit

MML-AP0071H, AP0091H, AP0121H, AP0151H, AP0181H, AP0241H

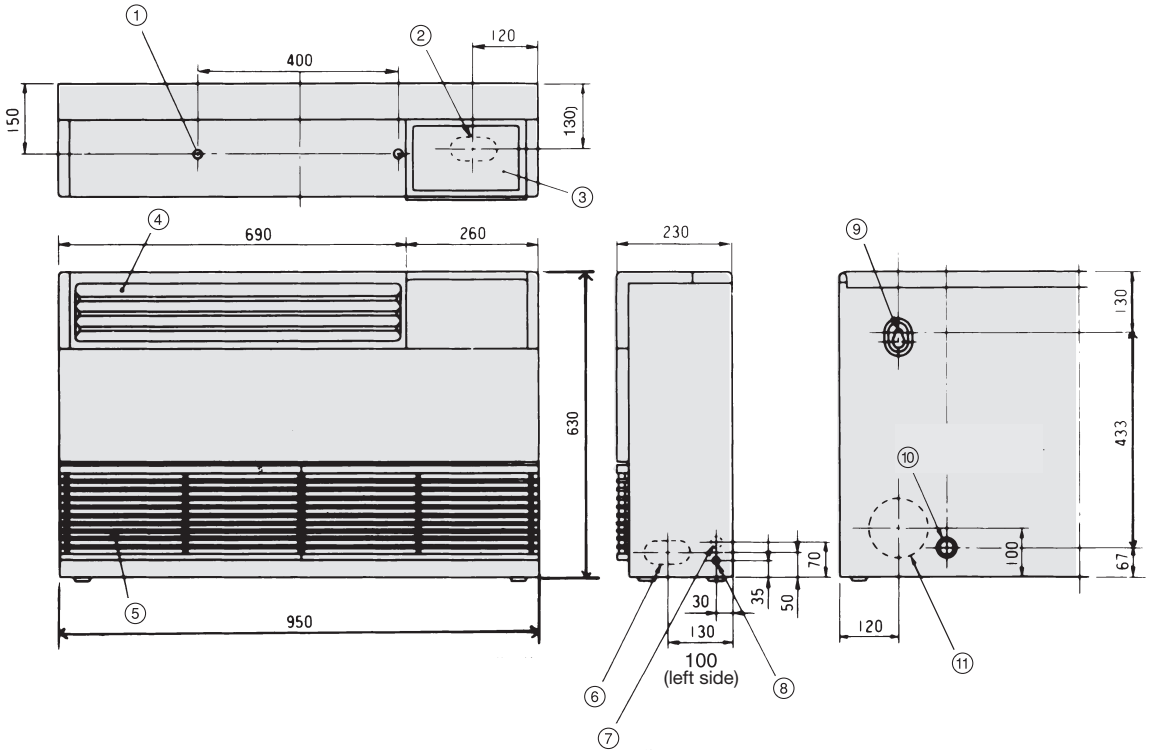

Model MML-	ØA	ØB
AP0071H, AP0091H, AP0121H	3/8”	1/4”
AP0151H, AP0181H	1/2”	1/4”
AP0241H	5/8”	3/8”

Space required for service
Figure shows left-hand piping

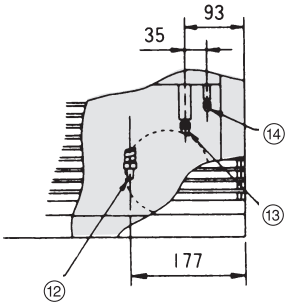

Pipe position diagram

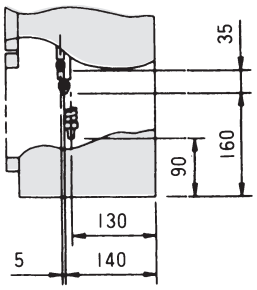

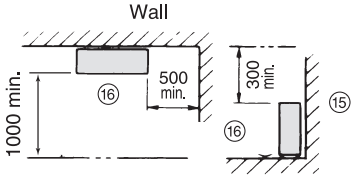

Legend

1. Hole for floor fixing (2-Ø10)
2. Lower refrigerant pipe connection (50 x 100 knockout hole)
3. Switch section (switch sold separately)
4. Air outlet
5. Air inlet
6. Refrigerant pipe connection (50 x 100 knockout hole) (both sides)
7. Power supply cord (Ø26 knockout) (both sides)
8. Earth screw M6
9. Hole for wall fixing (Ø10-Ø20 knockout x 2)
10. Hole for wall fixing (2-10 x 24 slot)
11. Refrigerant pipe connection (Ø130 knockout hole)
12. Drain pipe connection (Ø20)
13. Refrigerant pipe connection (gas ØA)
14. Refrigerant pipe connection (liquid ØB)
15. Wall
16. Front

All dimensions are given in mm.

Indoor unit - concealed chassis unit

MML-AP0071BH, AP0091BH, AP0121BH, AP0151BH, AP0181BH, AP0241BH

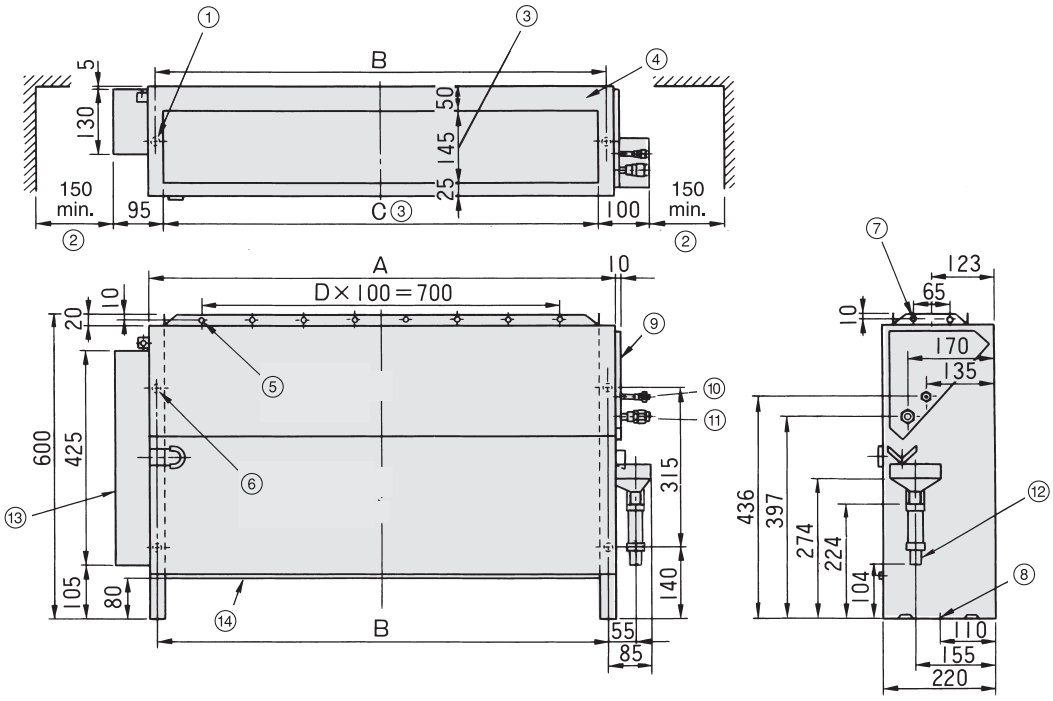

No.	Name
⑩	Pipe connection (liquid side ØE)
⑪	Pipe connection (gas side ØF
⑫	Drain pipe connection (20A)
⑬	Control box (earth terminal provided inside)
⑭	Air filter

Model MML-	A	B	C	D	ØE	ØF	G
AP0071BH, AP0091BH, AP0121BH	610	580	550	4	1/4”	3/8”	5
AP0151BH, AP0181H	910	880	850	7	1/4”	1/2”	8
AP0241BH	910	880	850	7	3/8”	5/8”	8

Wired remote controller (RBC-AMT31E)

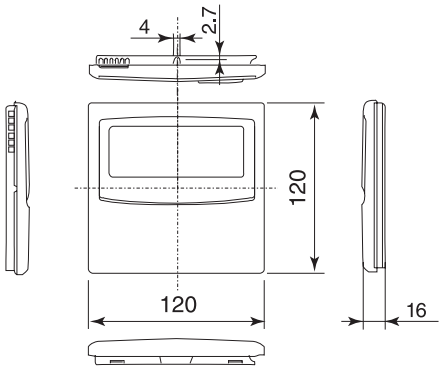

Legend

1. Hole for floor fixing
2. Service space
3. Air outlet
4. Ceiling board
5. G-Ø4.7 hole (front and rear each)
6. 4-Ø15 hole (for rear mounting)
7. 2-Ø4.7 hole (left/right side each)
8. 2-12 x 18 slot (hole for floor fixing)
9. Expansion valve box

All dimensions are given in mm.

Indoor unit - floor-mounted cabinet unit

MMF-AP0151H, AP0181H, AP0241H, AP0271H

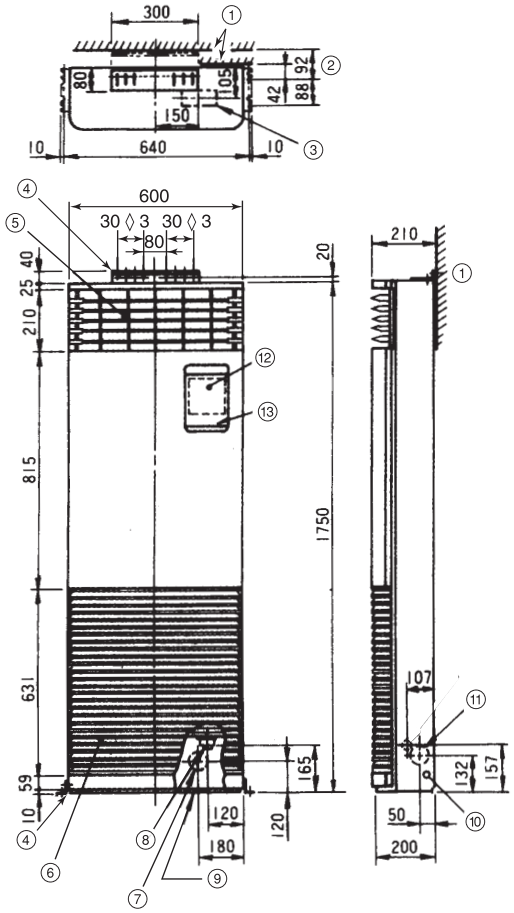

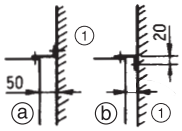

Space required for service (for right-hand piping)

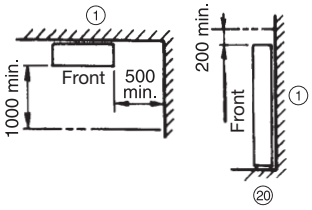

Model	ØA	ØB
MMF-AP0151H, AP0181H	1/2”	1/4”
MMF-AP0241H, AP0271H	5/8”	3/8”

Refrigerant pipe positions

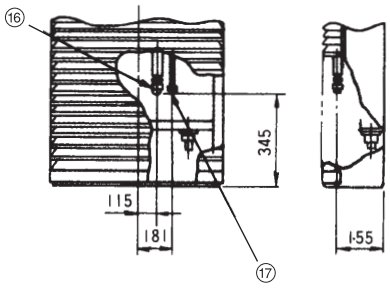

Details of hole for rear piping

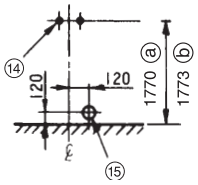

Details of hole for bottom piping

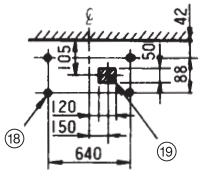

Legend

1. Wall
2. With 50 mm wall clearance
3. Lower refrigerant pipe connection (50 x 120 knockout hole)
4. Installation plate
5. Air outlet
6. Air inlet
7. Refrigerant pipe connection (rear) (Ø130 knockout hole)
8. Drain hose
9. Refrigerant pipe connection (bottom) (50 x 120 knockout hole)
10. Earth screw M4
11. Refrigerant pipe connection (both sides) (Ø80 knockout hole)
12. Control panel
13. Panel cover
14. 2-lower hole (for M8 screw or M8 anchor bolt)
15. Ø130 knockout hole (for rear piping)
16. Refrigerant pipe connection (gas ØA)
17. Refrigerant pipe connection (liquid ØB)
18. 4-lower hole (for M8 screw or M8 anchor bolt)
19. 15 x 120 square hole (for bottom piping)
20. Floor

All dimensions are given in mm.

Indoor unit - floor-mounted cabinet unit

MMF-AP0361H, AP0481H, AP0561H

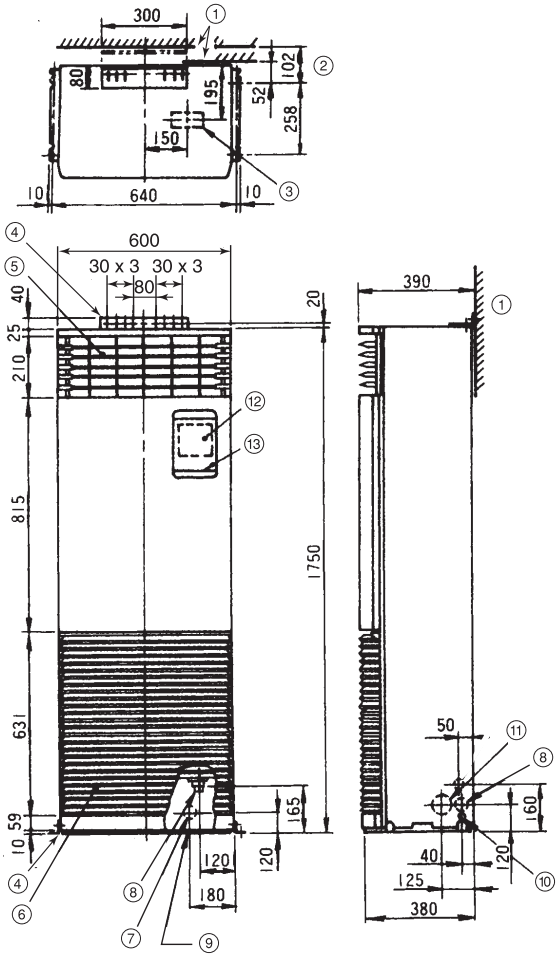

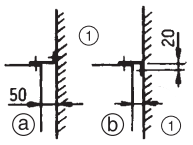

Space required for service (for right-hand piping)

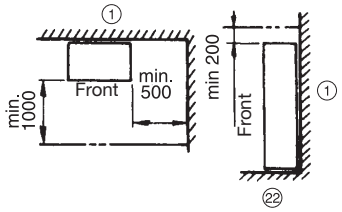

Refrigerant pipe positions

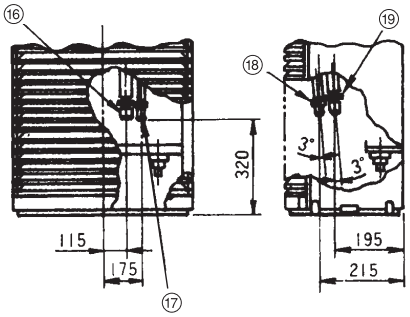

Details of hole for rear piping

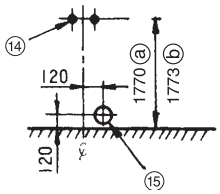

Details of hole for bottom piping

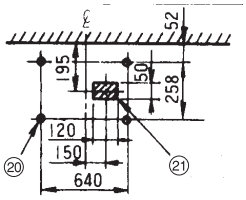

Legend

1. Wall
2. With 50 mm wall clearance
3. Lower refrigerant pipe connection (50 x 120 knockout hole)
4. Installation plate
5. Air outlet
6. Air inlet
7. Refrigerant pipe connection (rear) (Ø130 knockout hole)
8. Drain hose
9. Refrigerant pipe connection (bottom) (50 x 120 knockout hole)
10. Earth screw M4
11. Refrigerant pipe connection (both sides) (Ø80 knockout hole)
12. Control panel
13. Panel cover
14. 2-lower hole (for M8 screw or M8 anchor bolt)
15. Ø130 knockout hole (for rear piping)
16. Refrigerant pipe connection (gas Ø3/4")
17. Refrigerant pipe connection (liquid Ø3/8")
18. Liquid side
19. Gas side
20. 4-lower hole (for M8 screw or M8 anchor bolt)
21. 50 x 120 square hole (for bottom piping)
22. Floor

All dimensions are given in mm.

Remote controller

Wired remote controller

RBC-AMT31E

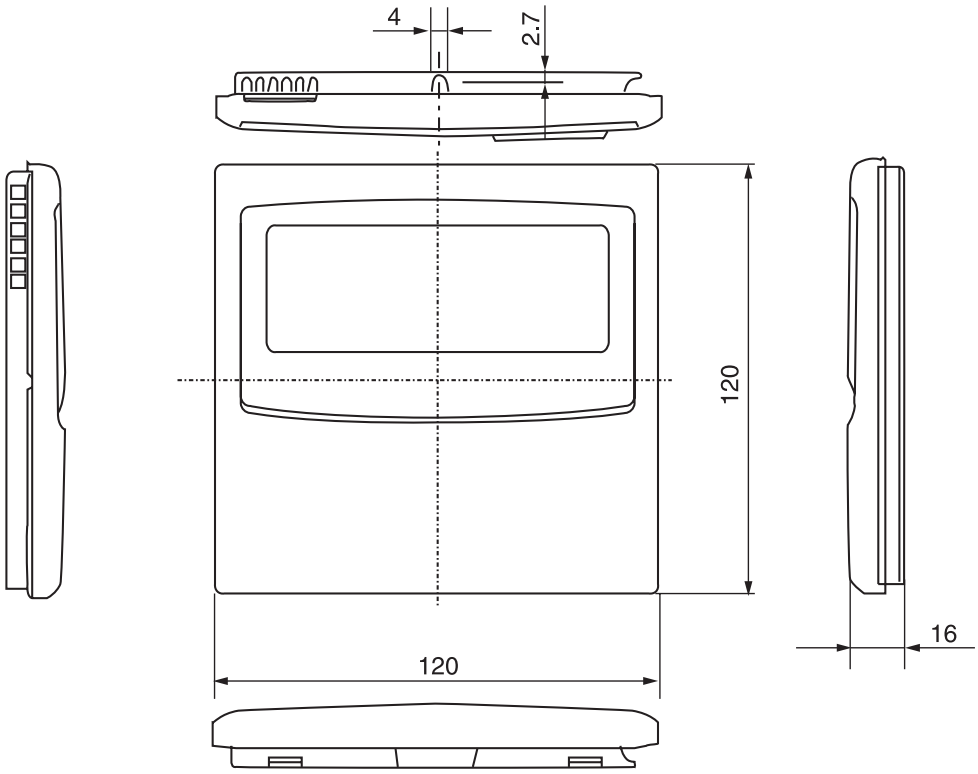

Simplified remote controller

RBC-AS21E

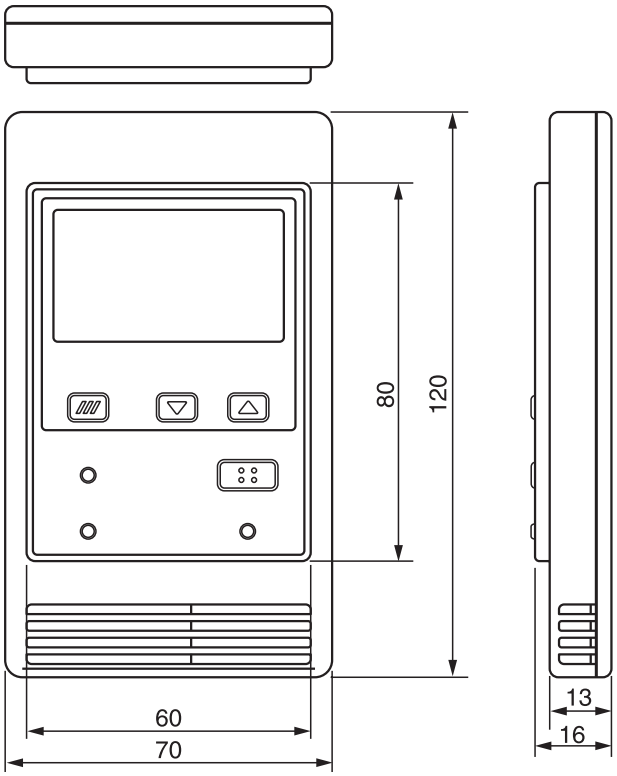

All dimensions are given in mm.

Wireless remote controller

TCB-AX21U (W)-E

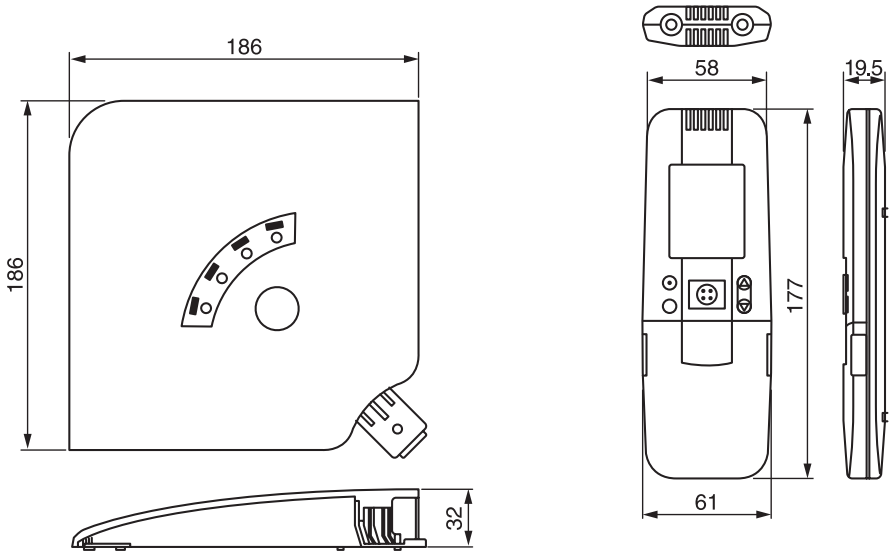

Wireless remote controller kit

RBC-AX22CE

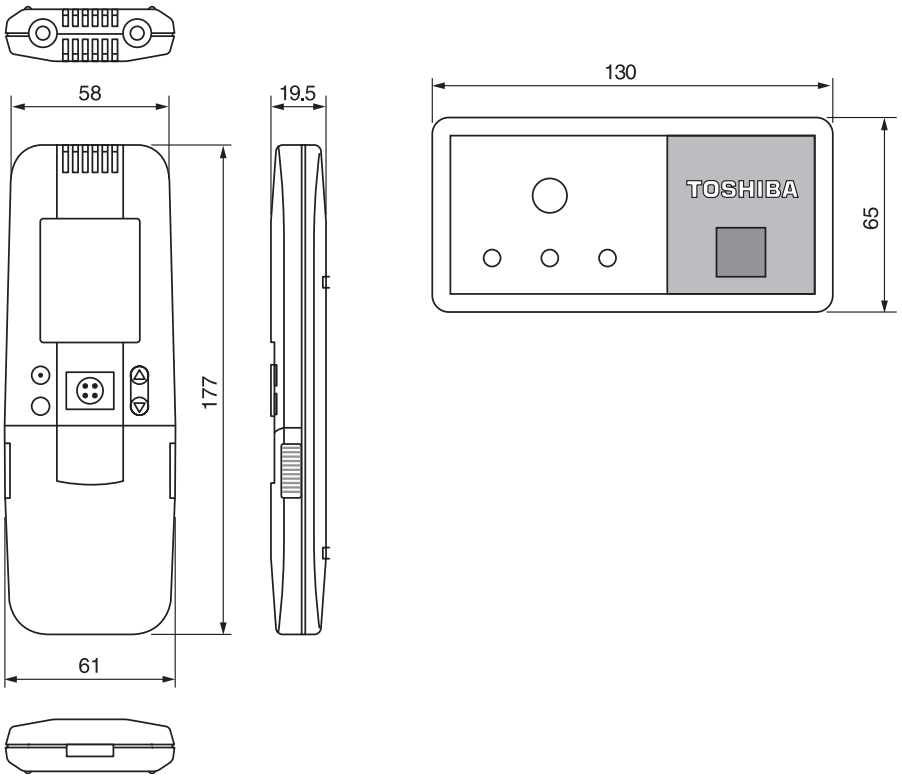

All dimensions are given in mm.

Wireless remote controller kit

TCB-AX21E

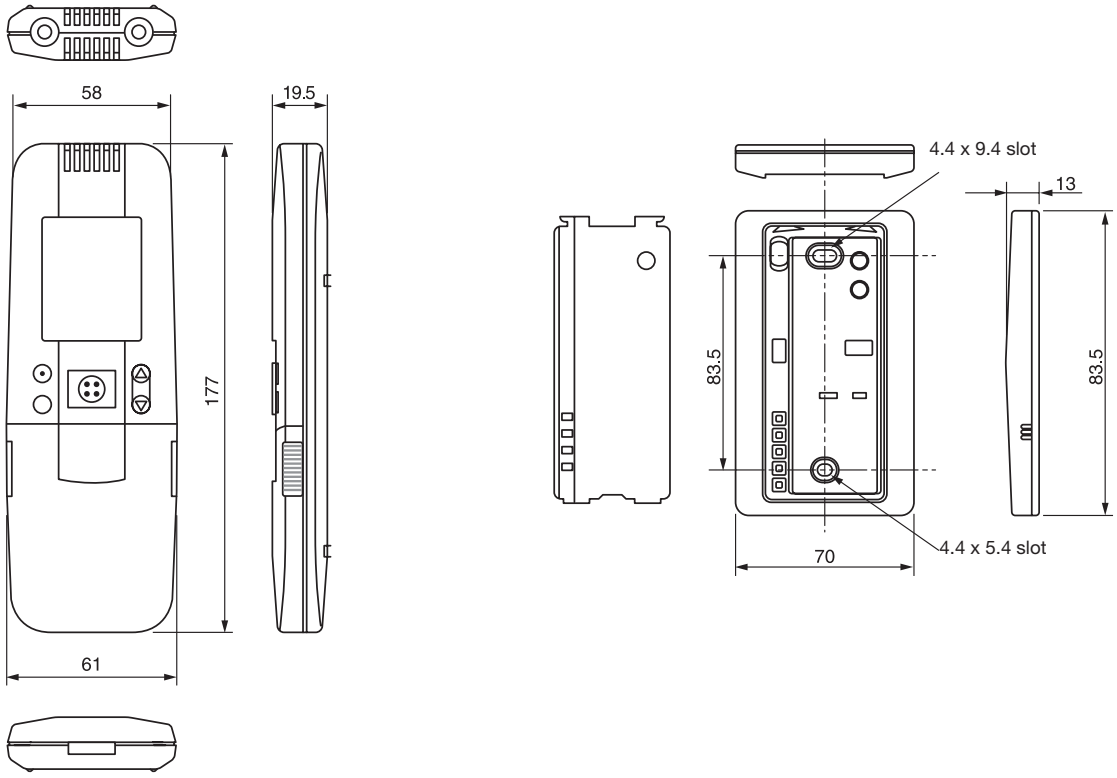

Weekly timer

RBC-EXW21E

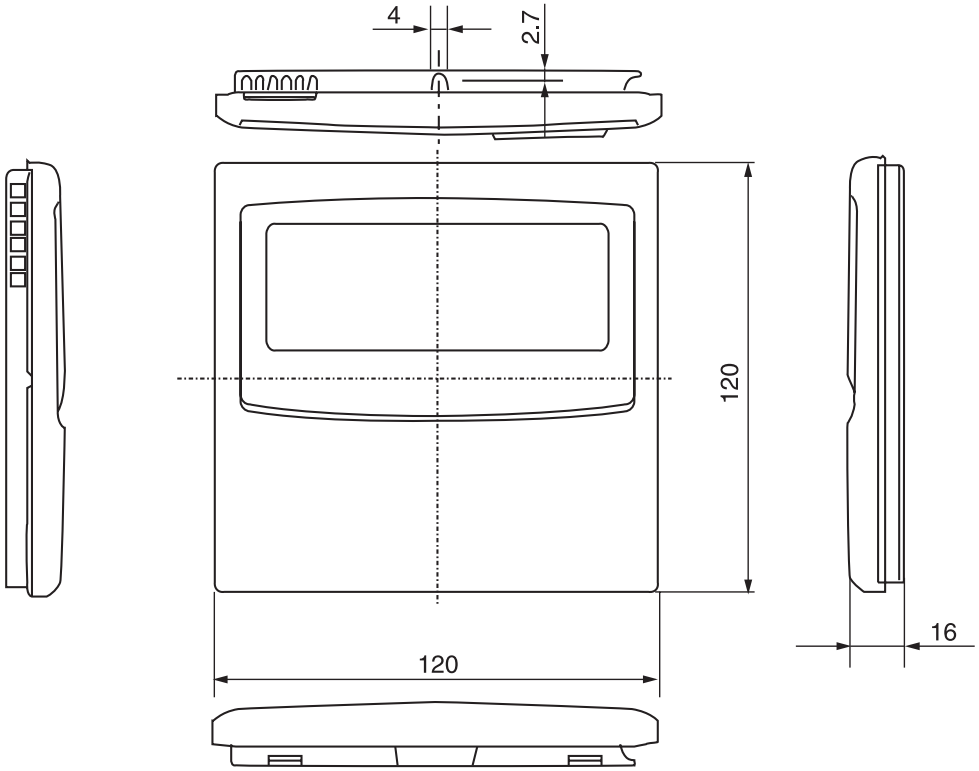

All dimensions are given in mm.

Central remote controller

TCB-SC642TLE

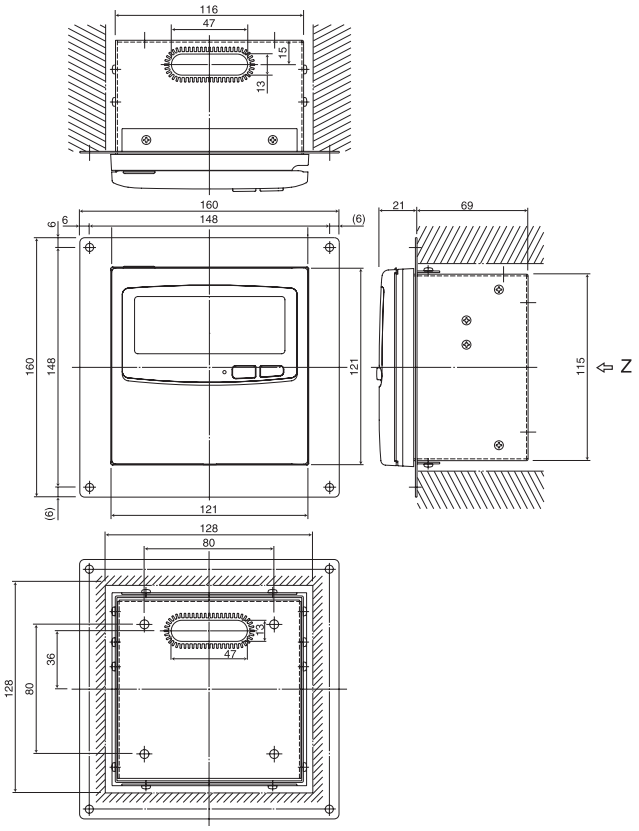

LON Gateway

TCB-IFLN**

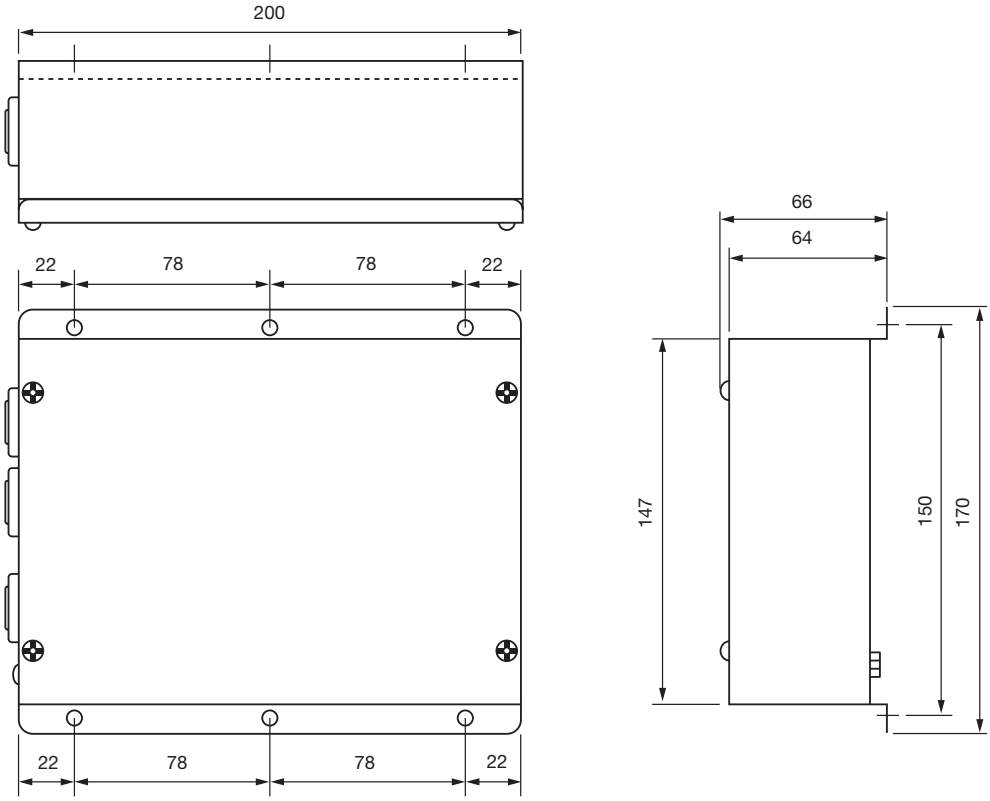

All dimensions are given in mm.

TCS-Net relay interface

BMS-IFLSV1E

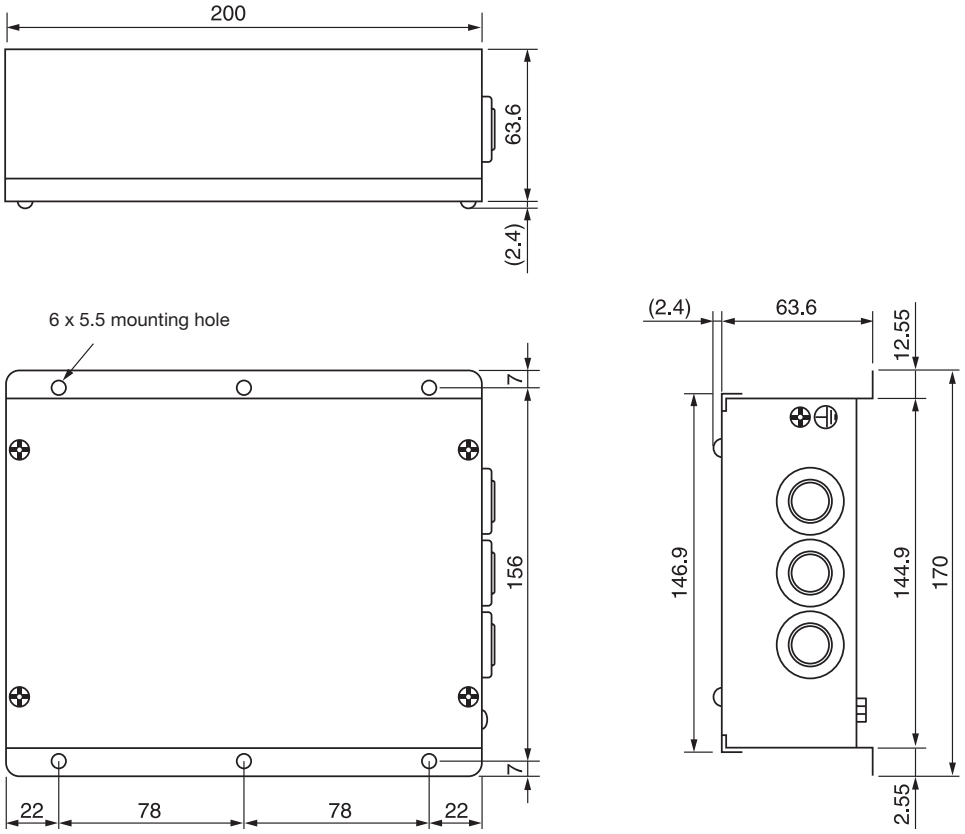

Touch-screen controller

BMS-TP5120ACE

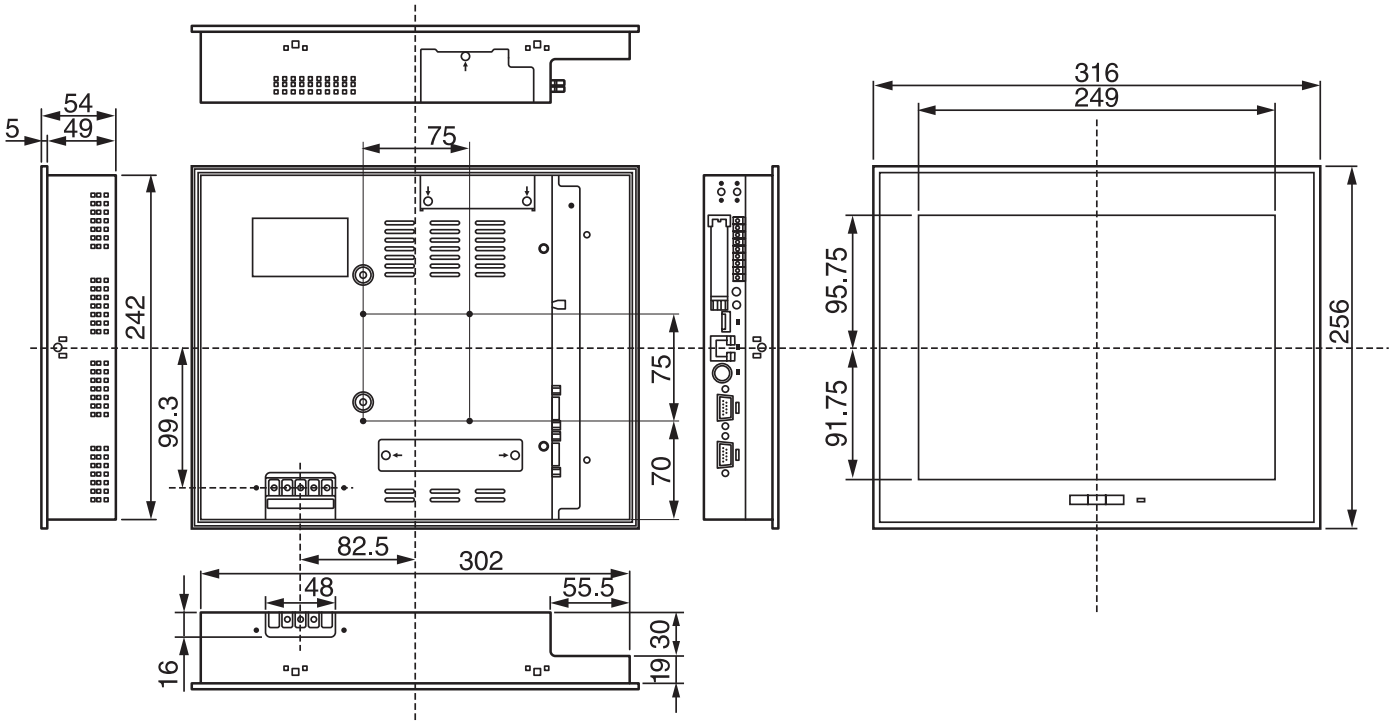

All dimensions are given in mm.

Intelligent server

BMS-LSV2E

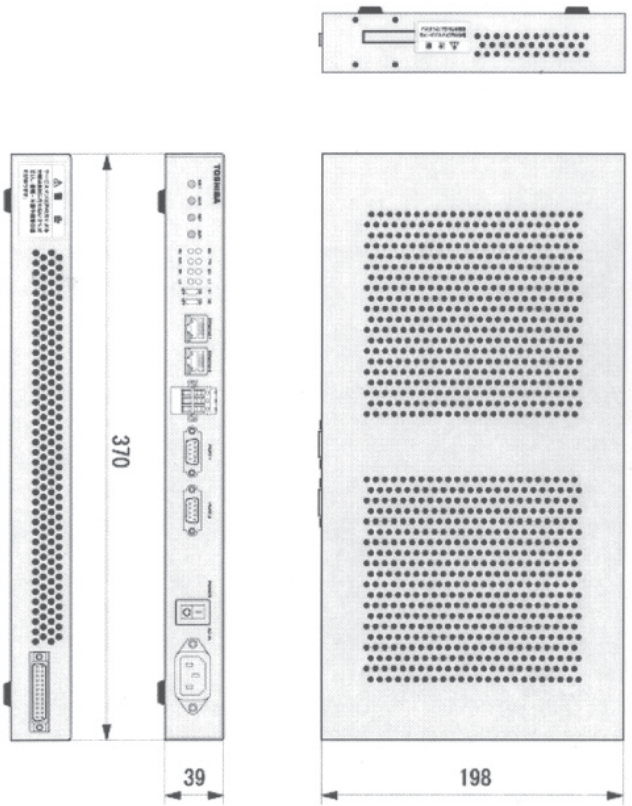

Energy monitoring relay interface

BMS-IFWH3E

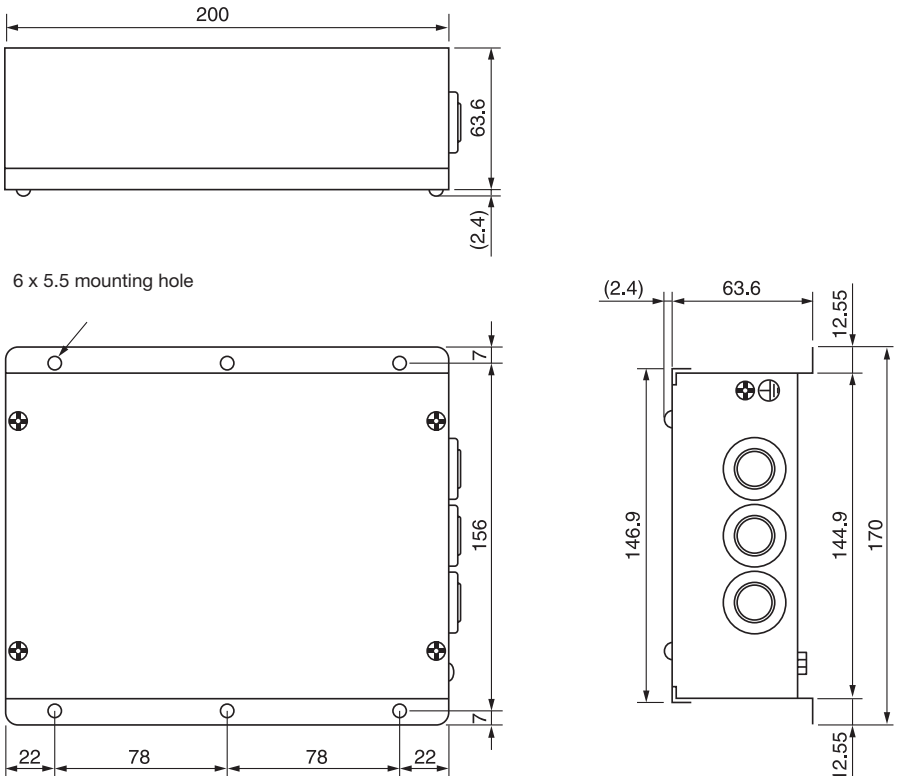

All dimensions are given in mm.

Digital I/O relay interface

BMS-IFDD01E

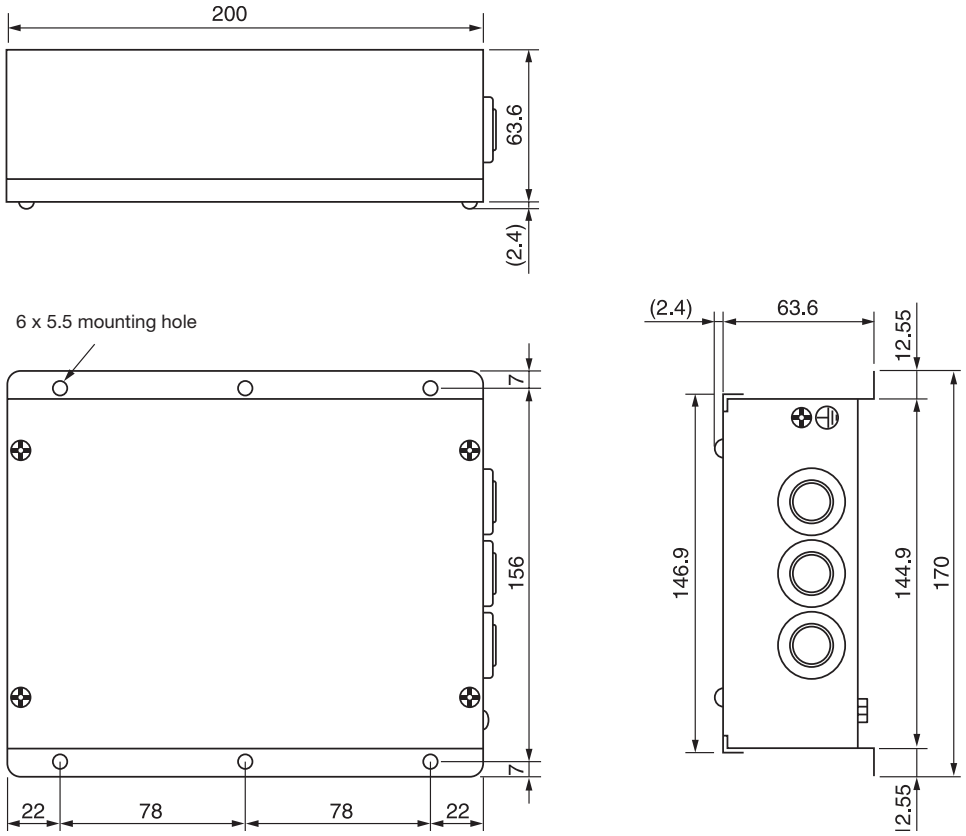

Windows-based central controller

BMS-LSV**

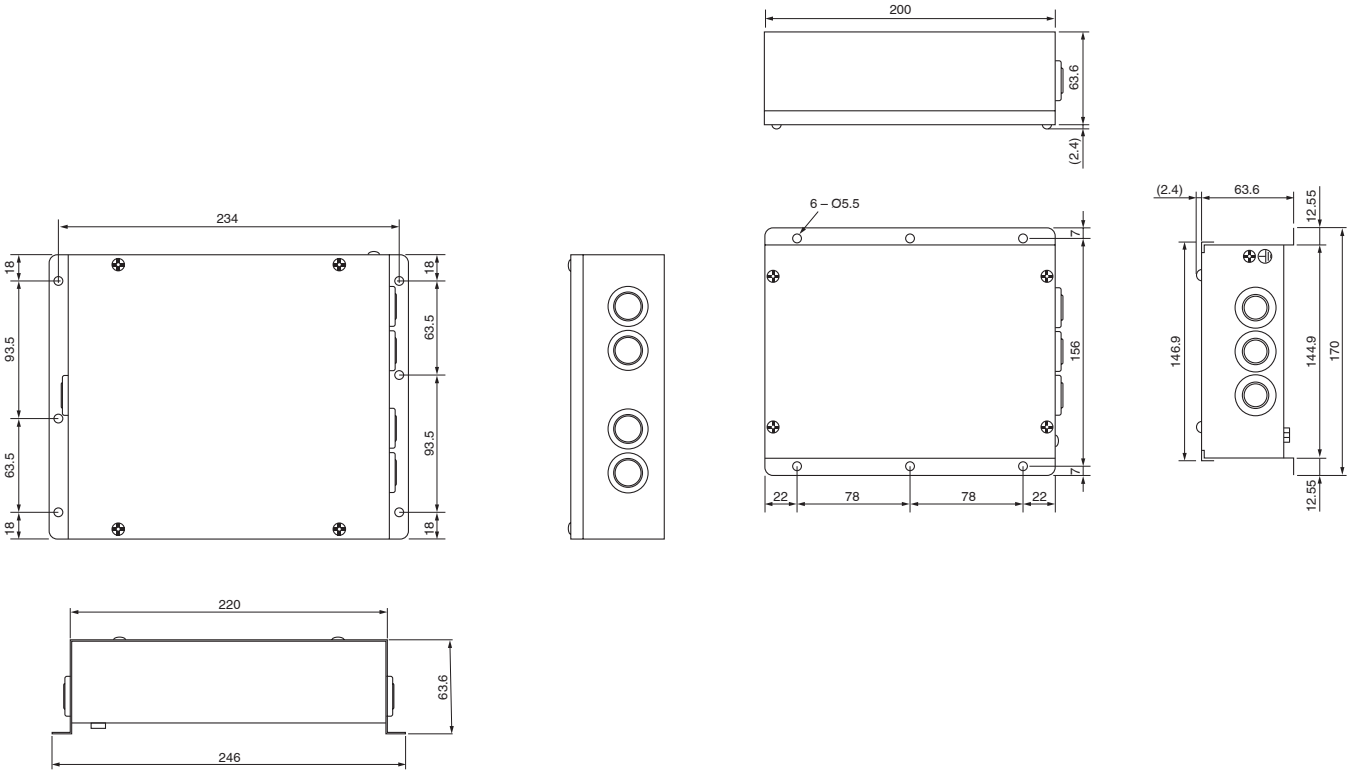

All dimensions are given in mm.

Outdoor module

MMY-MAP0501T8, MAP0601T8, MAP0801T8, MAP1001T8, MAP1201T8, MMY-MAP0501HT8, MAP0601HT8, MAP0801HT8, MAP1001HT8, MAP1201HT8,

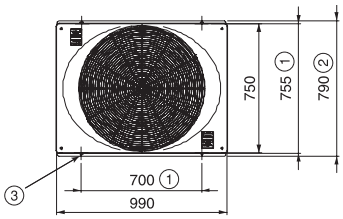

Notes:

1. If there is an obstacle at the top of the outdoor unit, ensure that the top of the outdoor unit clears the obstacle by 2000 mm.
2. Ensure that the height of obstacles around the outdoor unit does not exced 800 mm from the bottom of the outdoor unit.
3. Draw out the field-supplied pipe to the front of the outdoor unit horizontally, and keep 500 mm or more between the outdoor unit and pipe if placing the pipe transversely.

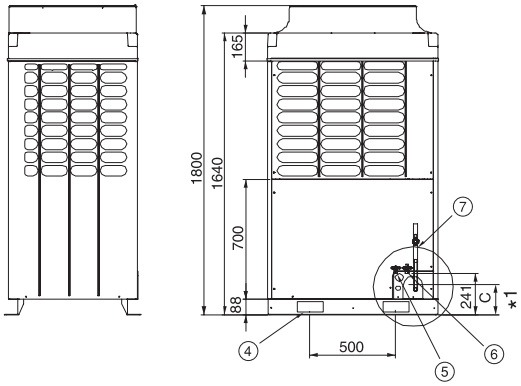

Model	A	B	C
MMY-MAP0501T8, MAP0501HT8	5/8”	3/8”	280
MMY-MAP0601T8, MAP0601HT8	3/4”	3/8”	280
MMY-MAP0801T8, MAP0801HT8	7/8”	1/2”	(205)
MMY-MAP1001T8, MAP1001HT8	7/8”	1/2”	(205)
MMY-MAP1201T8, MAP1201HT8	1-1/8”	1/2”	(205)

*1 Cutting position of L-shape pipe when pipe is connected at the gas side. (Recommended pipe connection position)

Space required for service

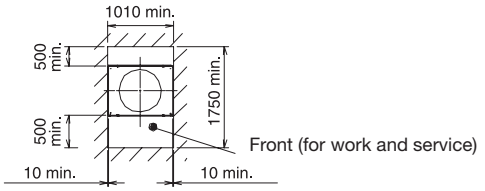

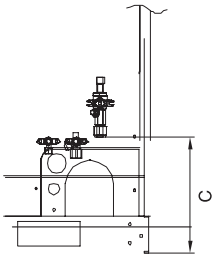

MMY-MAP0501T8
MMY-MAP0601T8
MMY-MAP0501HT8
MMY-MAP0601HT8

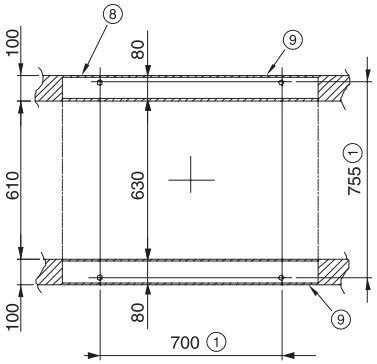

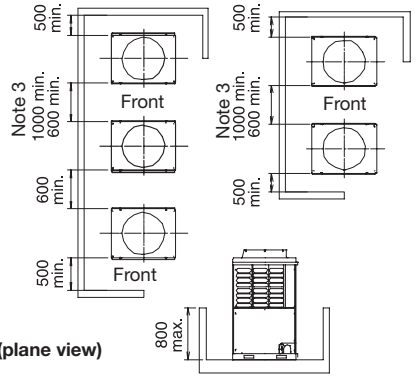

Details of front pipe/cabling holes

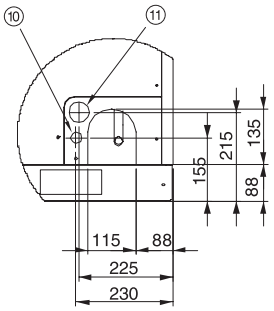

Details of hole for bottom piping (plane view)

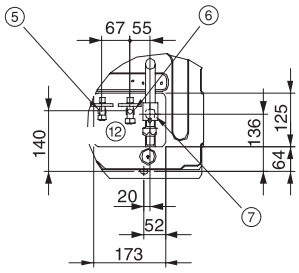

Legend

1. Anchor bolt pitch
2. (including feet)
3. 4-15 x 20 (slot)
4. 2-60 x 150 square hole (for forklift truck)
5. Balance pipe connection Ø3/8”
6. Refrigerant pipe connection (liquid ØB)
7. Refrigerant pipe connection (gas ØA)
8. Earthing section of bottom plate
9. Base
10. Knockout for control wiring (Ø27)
11. Knockout hole for power wiring (Ø48)
12. Square hole

All dimensions are given in mm.

Outdoor module - Two units connected

MMY-AP1401T8, AP1601T8, AP1801T8, AP2001T8, AP2211T8, AP2411T8, MMY-AP1401HT8, AP1601HT8, AP1801HT8, AP2001HT8, AP2211HT8, AP2411HT8,

Notes:
1. If there is an obstacle at the top of the outdoor unit, ensure that the top of the outdoor unit clears the obstacle by 2000 mm.
2. Ensure that the height of obstacles around the outdoor unit does not exced 800 mm from the bottom of the outdoor unit.
3. Draw out the field-supplied pipe to the front of the outdoor unit horizontally, and keep 500 mm or more between the outdoor unit and pipe if placing the pipe transversely.
4. Arrange each outdoor unitin order of its capacity (Master unit ≥ slave unit)

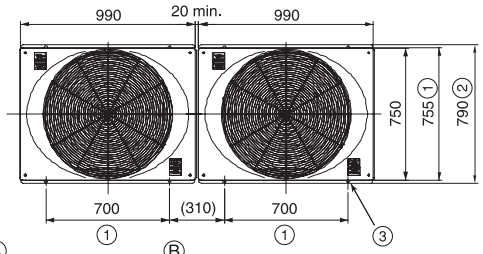

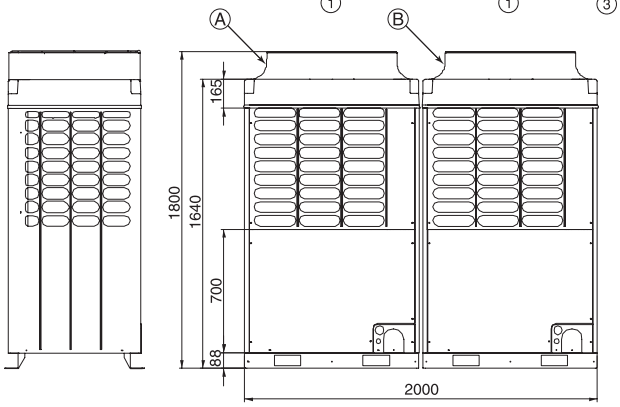

Unit combination	Outdoor unit combination	
	Master unit	Slave unit
MMY-AP1401T8, AP1401HT8	MMY-MAP0801T8, MAP0801HT8	MMY-MAP0601T8, MAP0601HT8
MMY-AP1601T8, AP1601HT8	MMY-MAP0801T8, MAP0801HT8	MMY-MAP0801T8, MAP0801HT8
MMY-AP1801T8, AP1801HT8	MMY-MAP1001T8, MAP1001HT8	MMY-MAP0801T8, MAP0801HT8
MMY-AP2001T8, AP2001HT8	MMY-MAP1001T8, MAP1001HT8	MMY-MAP1001T8, MAP1001HT8
MMY-AP2211T8, AP2211HT8	MMY-MAP1201T8, MAP1201HT8	MMY-MAP1001T8, MAP1001HT8
MMY-AP2411T8, AP2411HT8	MMY-MAP1201T8, MAP1201HT8	MMY-MAP1201T8, MAP1201HT8

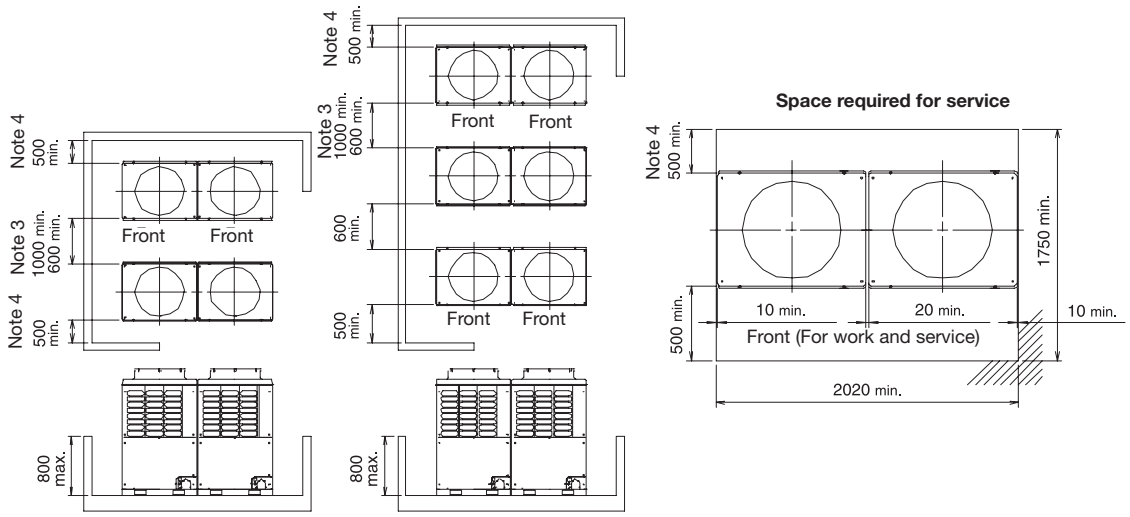

Legend
1. Anchor bolt pitch
2. (including feet)
3. 8-15 x 20 (slot)

All dimensions are given in mm.

Outdoor module - Three units connected

MMY- AP2201T8, AP2401T8, AP2601T8, AP2801T8, AP3001T8, AP3211T8, AP3411T8, AP3611T8
MMY- AP2201HT8, AP2401HT8, AP2601HT8, AP2801HT8, AP3001HT8, AP3211HT8, AP3411HT8, AP3611HT8

Notes:
1. If there is an obstacle at the top of the outdoor unit, ensure that the top of the outdoor unit clears the obstacle by 2000 mm.
2. Ensure that the height of obstacles around the outdoor unit does not exced 800 mm from the bottom of the outdoor unit.
3. Draw out the field-supplied pipe to the front of the outdoor unit horizontally, and keep 500 mm or more between the outdoor unit and pipe if placing the pipe transversely.
4. Arrange each outdoor unitin order of its capacity (Master unit ≥ slave unit ≥ slave unit)

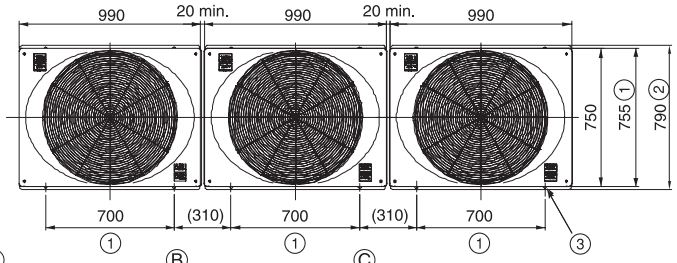

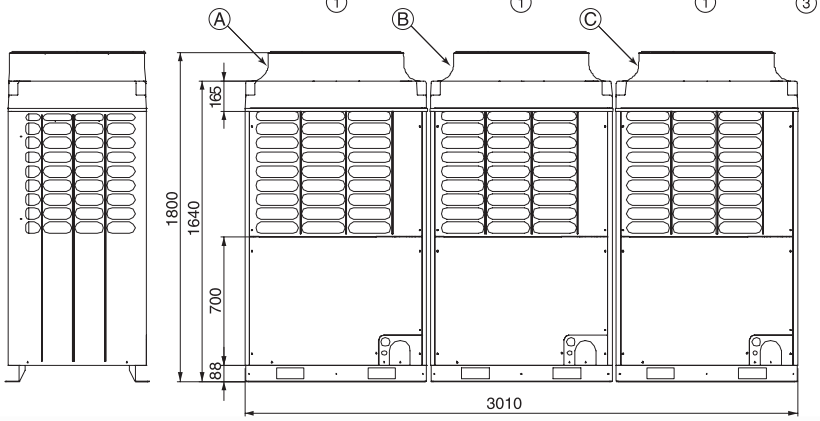

Unit combination	Outdoor unit combination Master unit	Slave unit	Slave unit
MMY-AP2201T8, HT8	MMY-MAP0801T8, HT8	MMY-MAP0801T8, HT8	MMY-MAP0601T8, HT8
MMY-AP2401T8, HT8	MMY-MAP0801T8, HT8	MMY-MAP0801T8, HT8	MMY-MAP0801T8, HT8
MMY-AP2601T8, HT8	MMY-MAP1001T8, HT8	MMY-MAP0801T8, HT8	MMY-MAP0801T8, HT8
MMY-AP2801T8, HT8	MMY-MAP1001T8, HT8	MMY-MAP1001T8, HT8	MMY-MAP0801T8, HT8
MMY-AP3001T8, HT8	MMY-MAP1201T8, HT8	MMY-MAP1001T8, HT8	MMY-MAP1001T8, HT8
MMY-AP3221T8, HT8	MMY-MAP1201T8, HT8	MMY-MAP1001T8, HT8	MMY-MAP1001T8, HT8
MMY-AP3411T8, HT8	MMY-MAP1201T8, HT8	MMY-MAP1201T8, HT8	MMY-MAP1001T8, HT8
MMY-AP3611T8, HT8	MMY-MAP1201T8, HT8	MMY-MAP1201T8, HT8	MMY-MAP1201T8, HT8

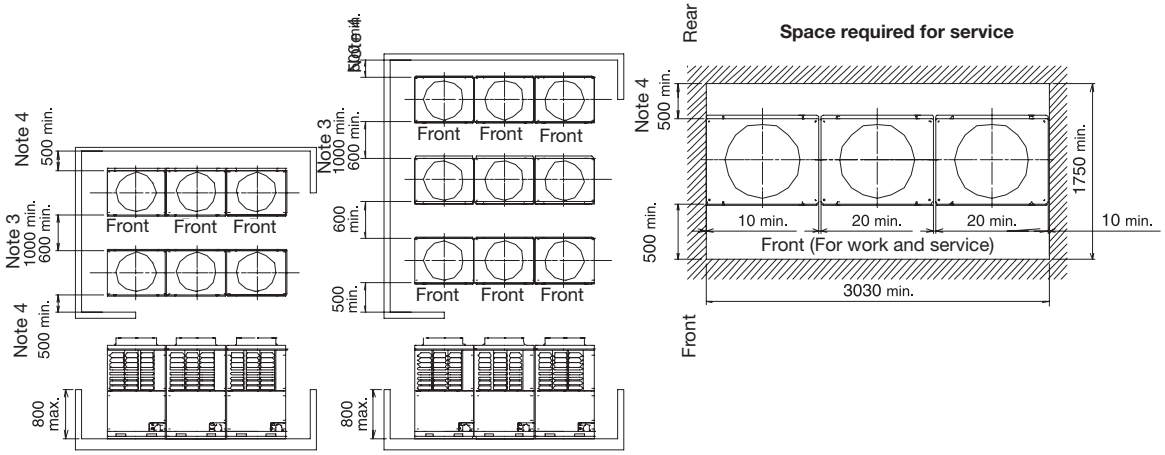

Legend
1. Anchor bolt pitch
2. (including feet)
3. 16-15 x 20 (slot)

All dimensions are given in mm.

Outdoor module - Four units connected

MMY- AP3201T8, AP3401T8, AP3601T8, AP3801T8, AP4001T8, AP4201T8, AP4401T8, AP4601T8, AP4801T8
MMY- AP3201HT8, AP3401HT8, AP3601HT8, AP3801HT8, AP4001HT8, AP4201HT8, AP4401HT8, AP4601HT8, AP4801HT8

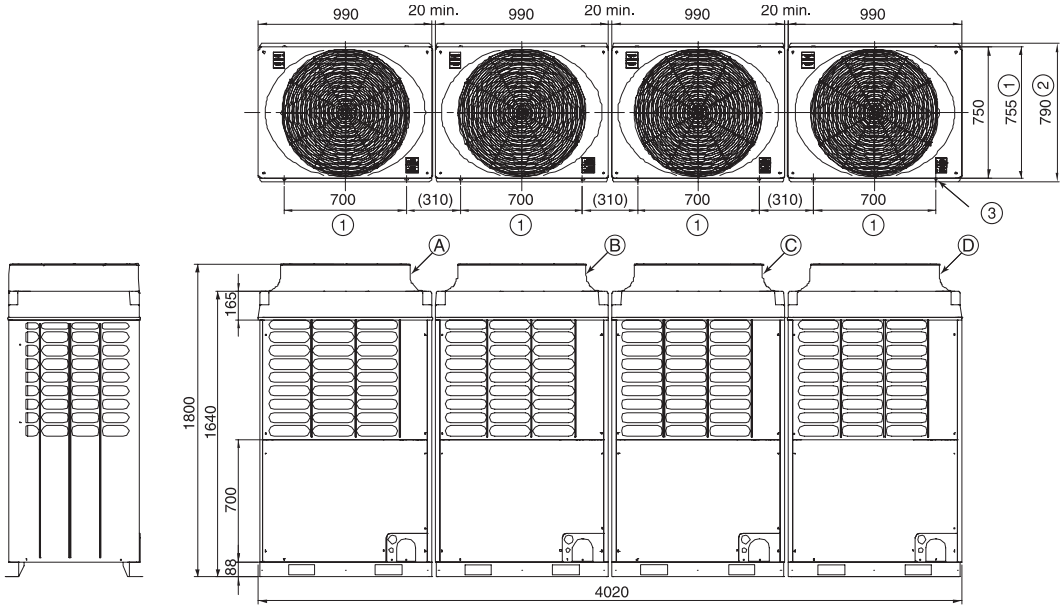

Unit combination	Outdoor unit combination			
	Master unit	Slave unit	Slave unit	Slave unit
MMY-AP3201T8, HT8	MMY-MAP0801T8, HT8	MMY-MAP0801T8, HT8	MMY-MAP0801T8, HT8	MMY-MAP0801T8, HT8
MMY-AP3401T8, HT8	MMY-MAP1001T8, HT8	MMY-MAP0801T8, HT8	MMY-MAP0801T8, HT8	MMY-MAP0801T8, HT8
MMY-AP3601T8, HT8	MMY-MAP1001T8, HT8	MMY-MAP1001T8, HT8	MMY-MAP0801T8, HT8	MMY-MAP0801T8, HT8
MMY-AP3801T8, HT8	MMY-MAP1001T8, HT8	MMY-MAP1001T8, HT8	MMY-MAP1001T8, HT8	MMY-MAP0801T8, HT8
MMY-AP4001T8, HT8	MMY-MAP1001T8, HT8	MMY-MAP1001T8, HT8	MMY-MAP1001T8, HT8	MMY-MAP1001T8, HT8
MMY-AP4201T8, HT8	MMY-MAP1201T8, HT8	MMY-MAP1001T8, HT8	MMY-MAP1001T8, HT8	MMY-MAP1001T8, HT8
MMY-AP4401T8, HT8	MMY-MAP1201T8, HT8	MMY-MAP1201T8, HT8	MMY-MAP1001T8, HT8	MMY-MAP1001T8, HT8
MMY-AP4601T8, HT8	MMY-MAP1201T8, HT8	MMY-MAP1201T8, HT8	MMY-MAP1201T8, HT8	MMY-MAP1001T8, HT8
MMY-AP4801T8, HT8	MMY-MAP1201T8, HT8	MMY-MAP1201T8, HT8	MMY-MAP1201T8, HT8	MMY-MAP1201T8, HT8

Notes:

1. If there is an obstacle at the top of the outdoor unit, ensure that the top of the outdoor unit clears the obstacle by 2000 mm.
2. Ensure that the height of obstacles around the outdoor unit does not exced 800 mm from the bottom of the outdoor unit.
3. Draw out the field-supplied pipe to the front of the outdoor unit horizontally, and keep 500 mm or more between the outdoor unit and pipe if placing the pipe transversely.
4. Arrange each outdoor unitin order of its capacity
   (Master unit ≥ slave unit ≥ slave unit ≥ slave unit)

Space required for service

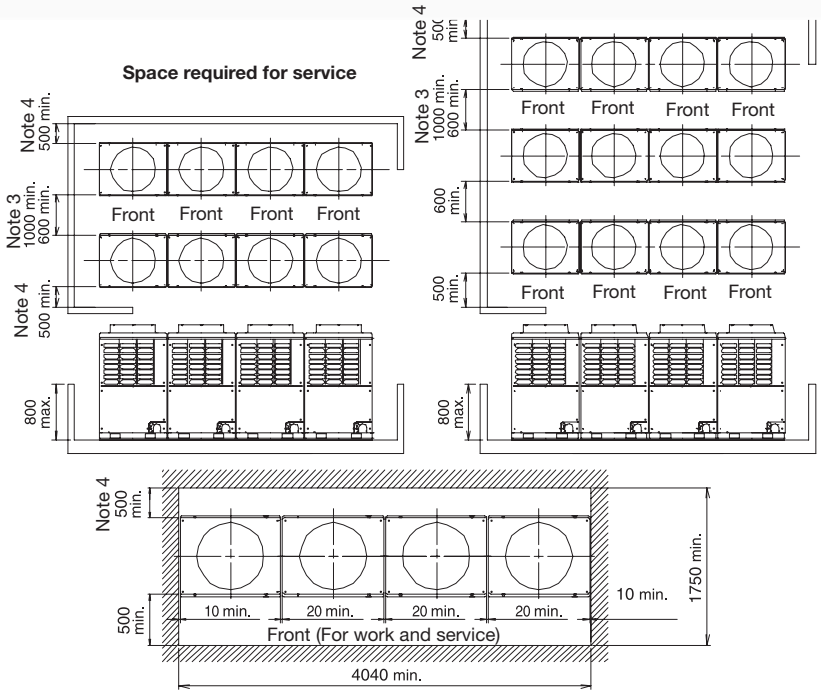

Legend

1. Anchor bolt pitch
2. (including feet)
3. 16-15 x 20 (slot)

All dimensions are given in mm.

Branch header/branch joint

Branch header
RBM-HY1043E, HY1083E, HY2043E,HY2083E

Gas side

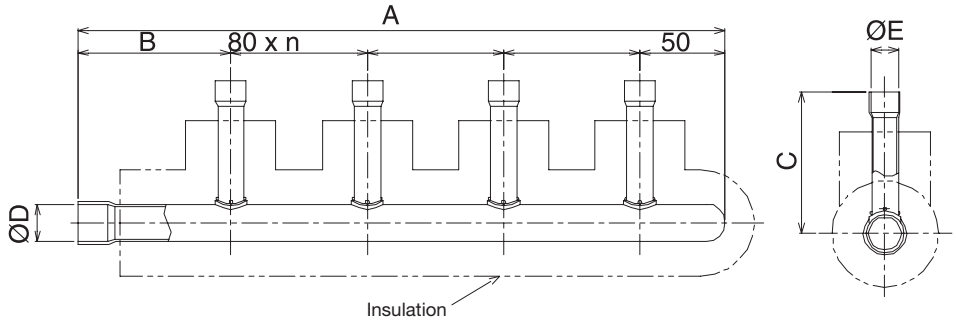

Liquid side

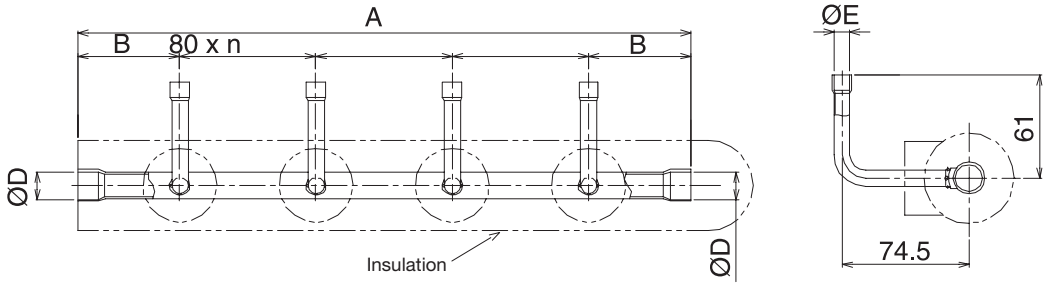

Model		A	B	C	ØD	ØE	n	Accessory socket x quantity
RBM-HY1043E	Gas side	380	90	83,6	7/8”	5/8”	3	⑥ x 4, ⑨ x 4, ⑭ x 1, ⑱ x 1, ⑦⓪ x 1
	Liquid side	360	60	-	5/8”	3/8”	3	① x 4, ⑥ x 1, ⑨ x 1
RBM-HY1083E	Gas side	700	90	83,6	7/8”	5/8”	7	⑥ x 8, ⑨ x 8, ⑭ x 1, ⑱ x 1, ⑦⓪ x 1
	Liquid side	680	60	-	5/8”	3/8”	7	① x 8, ⑥ x 1, ⑨ x 1
RBM-HY2043E	Gas side	385,5	95,5	89,3	1-1/4”	5/8”	3	⑥ x 2, ⑨ x 2, ㉗ x 1, ⑤⑨ x 1
	Liquid side	360	60	-	5/8”	3/8”	3	① x 2
RBM-HY2083E	Gas side	705,5	95,5	89,3	1-1/4”	5/8”	7	⑥ x 7, ⑨ x 7, ㉗ x 1, ⑤⑨ x 1
	Liquid side	680	60	-	5/8”	3/8”	7	① x 7

T-shape branching joint
RBM-BT13E

Gas side

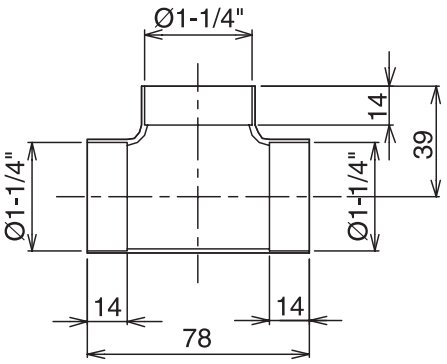

Liquid side

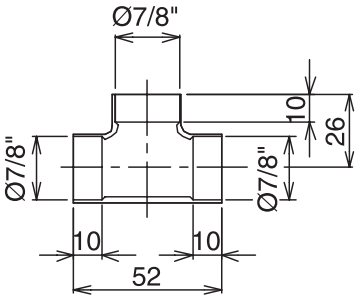

Balance pipe

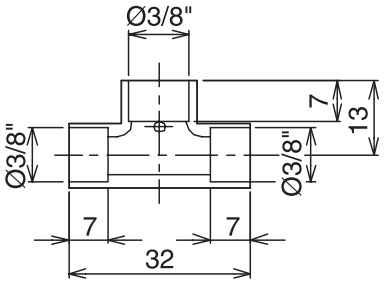

	Accessory socket x quantity
Gas side	⑥① x 1, ⑥② x 1, ⑦① x 2, ⑦③ x 2, ⑦④ x 1
Liquid side	⑭ x 2, ⑱ x 1, ⑧⑤ x 2, ⑧⑥ x 1

All dimensions are given in mm, except where indicated.

Y-shape branching joint
RBM-BY53E, BY103E

Gas side

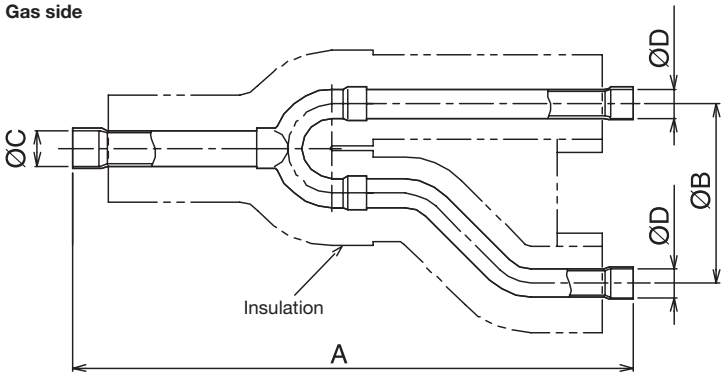

Liquid side

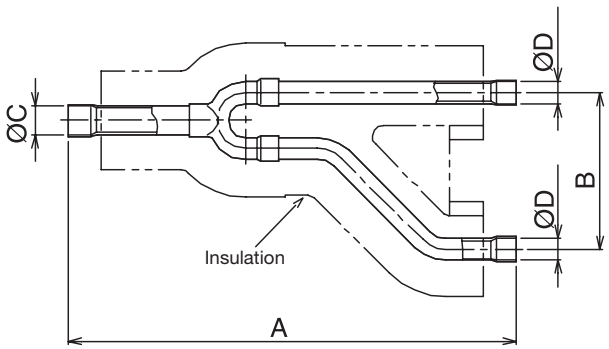

RBM-BY203E, BY303E

Gas side

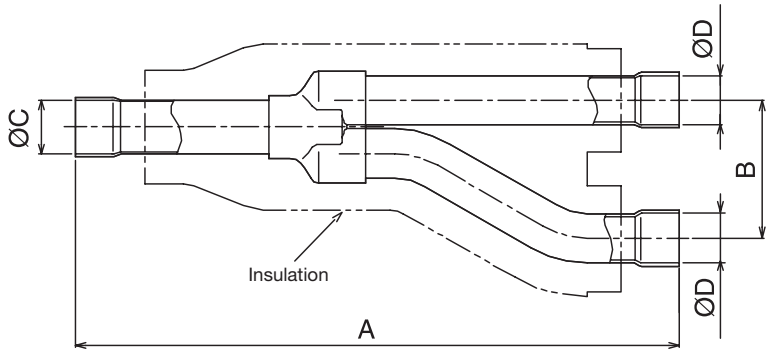

Liquid side

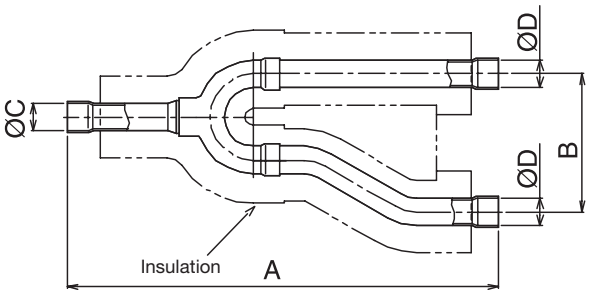

Model		A	B	ØC	ØD	Accessory socket x quantity
RBM-BY53E	Gas side	250	80	5/8”	1/2”	⑤ x 2, ⑭ x 2, ⑨ x 1, ⑤① x 1
	Liquid side	200	70	1/2”	3/8”	① x 2, ⑤ x 1
RBM-BY103E	Gas side	350	80	7/8”	3/4”	⑦ x 1, ⑩ x 1, ⑬ x 2, ⑱ x 1, ⑤② x 2, ⑦⓪ x 1, ⑧⑨ x 1
	Liquid side	250	80	5/8”	1/2”	② x 1, ⑤ x 2, ⑥ x 1, ⑨ x 1, ⑤④ x 1
RBM-BY203E	Gas side	350	80	1-1/4”	1-1/8”	⑯ x 1, ⑳ x 1, ㉗ x 1, ㊸ x 2, ㊽ x 1, ㊾ x 1, ⑤⑧ x 1, ⑤⑨ x 1
	Liquid side	250	80	5/8”	5/8”	③ x 1, ⑥ x 1, ⑨ x 2
RBM-BY303E	Gas side	400	110	1-1/2”	1-1/2”	⑥① x 3, ⑥② x 2, ⑦① x 2, ⑦③ x 1, ⑦④ x 1, ⑦⑤ x 1, ⑦⑥ x 1, ⑦⑦ x 1
	Liquid side	350	80	7/8”	3/4”	④ x 1, ⑦ x 1, ⑩ x 1, ⑬ x 2, ⑭ x 1, ⑱ x 1, ⑤② x 1

All dimensions are given in mm, except where indicated.

Accessory socket

1

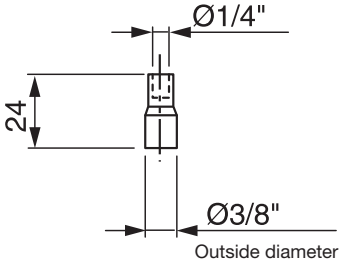

2 5 54

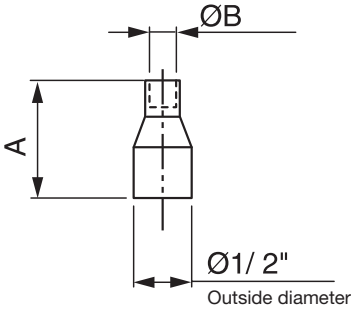

	A	ØB
2	29	1/4"
5	26	3/8"
54	31	5/8"

3 6 9 51

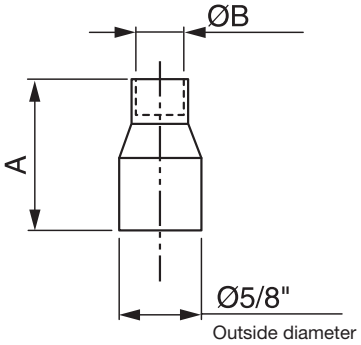

	A	ØB
3	35	1/4"
6	32	3/8"
9	28	1/2"
51	38	3/4"

4 7 10 13 52 89

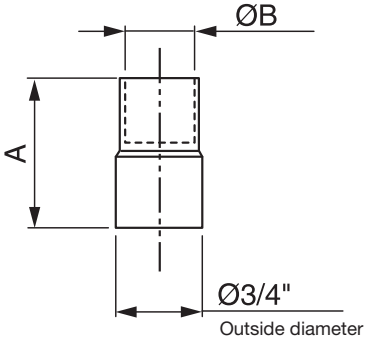

	A	ØB
4	39	1/4"
7	39	3/8"
10	36	1/2"
13	33	5/8"
52	43	7/8"
89	53	1-1/8"

14 18 70 85 86

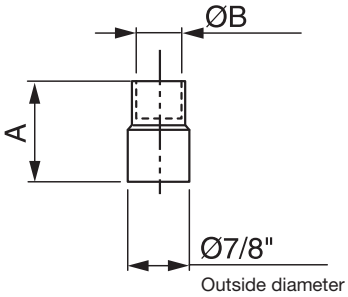

	A	ØB
14	40	5/8"
18	40	3/4"
70	54	1-1/8"
85	41	1/2"
86	44	3/8"

16 20 43 48 49 58

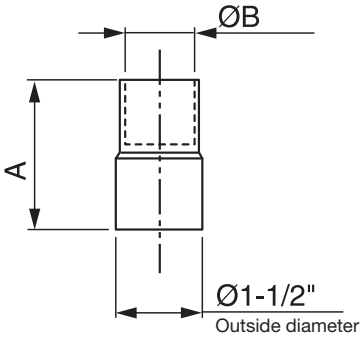

	A	ØB
16	50	5/8"
20	52	3/4"
43	50	7/8"
48	54	3/8"
49	52	1/2"
58	62	1-3/8"

27 59

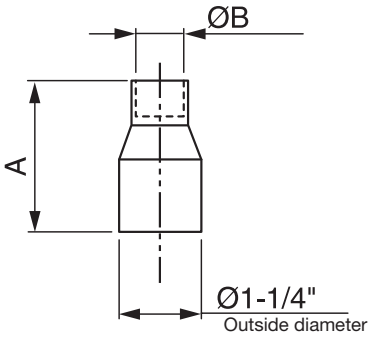

	A	ØB
27	49	1-1/8"
59	59	1-3/8"

61 62 73 74 75 76 77

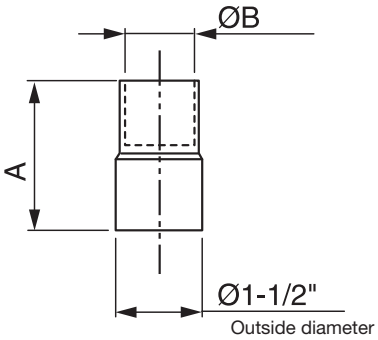

	A	ØB
61	55	1-3/8"
62	66	1-5/8"
71	66	7/8"
73	66	3/8"
74	66	1/2"
75	64	1-3/8"
76	62	1/2"
77	62	1-3/8"

TOSHIBA

AIR-COND®
KLIMAANLAGEN-HANDELSGESELLSCHAFT M.B.H.
INTERNATIONAL

Head Office: A-8010 Graz, Austria
Petersgasse 45
Telefon: +43/316/8089, Fax: +43/316/826371
E-mail: air-cond@air-cond.com, www.air-cond.com

Specifications are subject to change without notice.