FJM

Technical Data Book

Free Joint Multi (for Europe)

SAMSUNG

FREE JOINT MULTI

Contents

I. Products

1 Nomenclature

1-1. Outdoor units 6
1-2. Indoor units. 7

2 Line-up

2-1. Outdoor units 10
2-2. Indoor units. 10

3 Combination

4 Accessories

II. Performance

1 Specifications

1-1. Outdoor units 14
1-2. Indoor units. 16

2 Combination table

2-1. AJ040FCJ2EH/EU 30
2-2. AJ050FCJ2EH/EU 31
2-3. AJ052FCJ3EH/EU 32
2-4. AJ068FCJ3EH/EU 33
2-5. AJ070FCJ4EH/EU 34
2-6. AJ080FCJ4EH/EU 36
2-7. AJ100FCJ5EH/EU 38

3 Dimensional drawing

3-1. Outdoor units 42
3-2. Indoor units. 46

4 Electrical Wiring diagram

4-1. Outdoor units 60
4-2. Indoor units. 64

5 Cycle diagram

5-1. AJ040FCJ2EH/EU 77
5-2. AJ050FCJ2EH/EU 77
5-3. AJ052FCJ3EH/EU 78
5-4. AJ068FCJ3EH/EU 78
5-5. AJ070/80FCJ4EH/EU. 79
5-6. AJ100FCJ5EH/EU 79

6 Sound pressure level

6-1. Outdoor units 80
6-2. Indoor units. 82

7 Sound power level

7-1. Outdoor units 90
7-2. Indoor units. 92

8 Operation limit

8-1. AJ040/050/052/068/070/080CJ*EH/EU . . 96
8-2. AJ100FCJ5EH/EU 96

9 Recommended operation range (PQ Curve)

8-1. Slim Duct 97
8-2. MSP Duct. 97

10 Electric characteristics

FREE JOINT MULTI

I. Products

1 Nomenclature 6
2 Line-up 10
3 Combination 11
4 Accessories 12

1 Nomenclature

1-1. Outdoor units

Model name

AJ	068	F	C	J	3	E	H	/	E	U
(1)	(2)	(3)	(4)	(5)	(6)	(7)	(8)		Buyer	

(1) Model	
AJ	Free Joint Multi

(2) Capacity
X 1/10 kW (3 digits)

(3) Year	
E	2012
F	2013

(4) Max. Room No.	
S	Set (NASA)
N	Indoor Unit (NASA)
X	Outdoor Unit (NASA)
A	Set (Non NASA)
B	Indoor Unit (Non NASA)
C	Outdoor Unit (Non NASA)

(5) Product Notation	
J	Free Joint Multi
P	Pack Multi
H	DVM Home

(6) Max. Room No.	
2	2 Rooms
3	3 Rooms
4	4 Rooms
5	5 Rooms

(7) Rating voltage	
A	115V, 60Hz, 1Ø
B	220V, 60Hz, 1Ø
C	208~230V, 60Hz
D	200~220V, 50Hz
E	220~240V, 50Hz
F	208~230V, 60Hz, 3Ø
G	380~415V, 50Hz, 3Ø
H	380V, 60Hz, 3Ø
J	460V, 60Hz, 3Ø
K	220~240V, 50/60Hz, 1Ø
M	127V, 50Hz
N	380~415V, 50/60Hz, 3Ø

(6) Mode / Refrigerant		
C	Cooling Only	R410A
H	Heat Pump	
R	Heat Recovery	
D	Cooling Only	R22
E	Heat Pump	

1-2. Indoor units

Model name

AR	09	F	S	S	YA	WT	N	/	E	U
(1)	(2)	(3)	(4)	(5)	(6)	(7)	(8)		Buyer	

(1) Mode	
AR	RAC

(2) Capacity	
07	7,000Btu
09	9,000Btu
12	12,000Btu
18	18,000Btu
24	24,000Btu

(3) Year	
F	2013

(4) Inverter Type	
S	HP

(5) Feature	
S	SPI
F	NO SPI

(6) Series	
ED	CRYSTAL
PD	MALDIVES
PE	MALDIVES
YA	JUNGFRAU-PRM

(7) Color	
WT	JungFrau White Pearl
WU	Vivaldi White
GM	PM Gray
SN	Urban silver

(8) PRODUCT	
N	INDOOR

1 Nomenclature

1-2. Indoor units

Model name

AJ	N	100	N	D	E	H	A	/	C	D
(1)	(2)	(3)	(4)	(5)	(6)	(7)	(8)		Buyer	

(1) Mode	
AC	CAC
AD	DVM
AJ	FJM
AE	EHS

(2) Product Type	
S	Set
N	Indoor Unit
X	Outdoor Unit

(3) Capacity
X 1/10kW (3 digits)

(4) Product Notation	
Cassette type	Slim 1way
	2way
	Mini 4way
	4way
Duct type	HSP Duct
	MSP Duct
	LSP Duct(Slim)
Convertible type	Ceiling
	Console
Wall mounted type	Jungfrau
	Neo Forte - E
	Neo Forte
	Maldives
	Vivace

(5) Feature	
D	Deluxe
S	Standard

(6) Rating Voltage	
B	220V, 60Hz, 1Ø
C	208~230V, 60Hz
E	220~240V, 50Hz

(7) Product Notation ②		
C	Cooling Only	R410A
H	Heat Pump	
R	Heat Recovery	
D	Cooling Only	R22
E	Heat Pump	

(8) Version	
A~Z	Export

Model name

M	H	035	F	V	E	A	1
(1)	(2)	(3)	(4)	(5)	(6)	(7)	(8)

(1) Model	
M	Multi

(2) Mode	
C	Cooling Only
H	Heat Pump

(3) Capacity
X 1/10 kW (3 digits)

(4) Compressor	
F	Free Inverter
D	Free Digital Scroll

(5) Product Notation	
S	Slim 1way Cassette
M	Mini 4way Cassette
U	MSP Duct
N	Neo Forte
J	Console
V	Vivace
A	Crystal

(6) Rating Voltage	
A	115V, 60Hz
B	220V, 60Hz
C	208~230V, 60Hz
D	200~220V, 50Hz
E	220~240V, 50Hz

(7) Refrigerant	
Z	R22
A	R410A

(8) Version

Model name

NJ	026	L	H	X	E	A
(1)	(2	(3)	(4)	(5)	(6)	(7)

(1) Model	
NJ	Free Joint

(2) Capacity
X 1/10 kW (3 digits)

(3) Product Notation	
L	Slim Duct

(4) Mode	
C	Cooling Only
H	Heat Pump

(5) Refrigerant	
R	R22
X	R410A

(6) Rating Voltage	
E	220~240V, 50Hz

(7) Version	
A ~ Z	Export

2 Line - Up

2-1. Outdoor units

Capacity	4 / 5kW	5.2kW	6 / 7 / 8kW	10kW
Image				
Models	AJ040FCJ2EH/EU AJ050FCJ2EH/EU	AJ052FCJ3EH/EU	AJ068FCJ3EH/EU AJ070FCJ4EH/EU AJ080FCJ4EH/EU	AJ100FCJ5EH/EU

2-2. Indoor units

Type \ Capacity	1.6kW	2.0kW	2.6kW (2.5kW)	3.5kW	5.2kW (5.0kW)	7.0kW (6.8kW)
P Series (Maldives)						
DELUXE (Maldives++)						
Neo-Forte						
Crystal						
Y Series (Jungfrau)						
Mini 4way Cassette						
Slim 1way Cassette						
Slim Duct						
MSP						
Console						

3 Combination

Indoor Unit \ Outdoor Unit			AJ040FCJ2EH/EU	AJ050FCJ2EH/EU	AJ052FCJ3EH/EU	AJ068FCJ3EH/EU	AJ070FCJ4EH/EU	AJ080FCJ4EH/EU	AJ100FCJ5EH/EU
Chassis	Model	Capacity (kW)	4.0	5.0	5.2	6.0	7.0	8.0	10.0
Crystal	MH∗∗∗FAEA	2.0	•	•	•	•	•	•	•
		2.6	•	•	•	•	•	•	•
		3.5	•	•	•	•	•	•	•
		5.2	x	•	•	•	•	•	•
New Crystal	AR∗∗FSSEDWUN	2.6	•	•	•	•	•	•	•
		3.5	•	•	•	•	•	•	•
		5.2	x	•	•	•	•	•	•
Neo Forte	MH∗∗∗FNEA	2.0	•	•	•	•	•	•	•
		2.6	•	•	•	•	•	•	•
		3.5	•	•	•	•	•	•	•
		5.2	x	•	•	•	•	•	•
P Series (Maldives)	AR∗∗FSFPDGMNNT AR∗∗FSFPDGMNEU	2.0	•	•	•	•	•	•	•
		2.5	•	•	•	•	•	•	•
		3.5	•	•	•	•	•	•	•
		5.0	x	•	•	•	•	•	•
		6.8	x	x	x	x	x	•	•
DELUXE (Maldives++)	AR∗∗FSFPESNNEU	2.0	•	•	•	•	•	•	•
		2.5	•	•	•	•	•	•	•
		3.5	•	•	•	•	•	•	•
		5.0	x	•	•	•	•	•	•
		6.8	x	x	x	x	x	•	•
Y Series (Jungfrau)	AR∗∗FSSYAWTNEU	2.5	•	•	•	•	•	•	•
		3.5	•	•	•	•	•	•	•
		5.0	x	•	•	•	•	•	•
Console	MH∗∗∗FJEA	2.6	•	•	•	•	•	•	•
		3.5	•	•	•	•	•	•	•
		5.2	x	•	•	•	•	•	•
Slim 1-way	MH∗∗∗FSEA	2.6	•	•	•	•	•	•	•
		3.5	•	•	•	•	•	•	•
Mini 4-way	AJN∗∗∗NDEHA	1.6	x	•	•	•	•	•	•
		2.0	x	•	•	•	•	•	•
		2.6	x	•	•	•	•	•	•
		3.5	x	•	•	•	•	•	•
		5.2	x	x	x	•	•	•	•
Slim Duct	MH∗∗∗FEEA	2.6	x	•	•	•	•	•	•
		3.5	x	•	•	•	•	•	•
MSP Duct	MH∗∗∗FUEA	5.2	x	x	x	•	•	•	•

4 Accessories

Classification	Model	Image	Application model
Drain Pump	MDP-E075SEE3	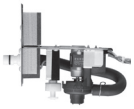	Slim Duct (2.6 ~ 3.5kW)
	MDP-M075SGU3		MSP Duct (5.2kW)
Panel	PC4SUSMA		Mini 4way Cassette
	PSSMA		Slim 1way Cassette
RAC Extension Board	MIM-A00		P Series (Maldives) Y Series (Jungfrau)

II. Performance

1 Specifications 14

2 Combination table 30

3 Dimensional drawing 42

4 Electrical wiring diagram. 60

5 Cycle diagram 77

6 Sound pressure level 80

7 Sound power level 90

8 Operation limit 96

9 Recommended operation range (PQ Curve) 97

10 Electric characteristics 98

1 Specifications

1-1. Outdoor units

Model Name				AJ040FCJ2EH/EU	AJ050FCJ2EH/EU	AJ052FCJ3EH/EU	AJ068FCJ3EH/EU
Power Supply			Ø, #, V, Hz	1,2,220-240,50	1,2,220-240,50	1,2,220-240,50	1,2,220-240,50
Mode			-	HEAT PUMP	HEAT PUMP	HEAT PUMP	HEAT PUMP
Performance	HP		HP	1.50	1.80	2.00	2.50
	Capacity (Nominal)	Cooling 1)	kW	4.00	5.00	5.20	6.80
			Btu/h	13,600	17,100	17,700	23,200
		Heating 2)	kW	4.40	5.70	6.30	8.00
			Btu/h	15,000	19,400	21,500	27,300
Power	Power Input (Nominal)	Cooling 1)	kW	1.02	1.32	1.35	2.00
		Heating 2)	kW	0.99	1.35	1.40	1.91
	Current Input (Nominal)	Cooling 1)	A	4.70	6.00	6.20	9.20
		Heating 2)	A	4.50	6.20	6.40	8.70
	MCA		A	9.8	11.8	12.2	15.5
	MFA		A	11.25	13.75	13.75	17.50
Energy Efficiency	Nominal Cooling(EER) 1)		-	3.92	3.79	3.85	3.40
	Nominal Heating(COP) 1)		-	4.44	4.22	4.50	4.19
Compressor	Type		-	Twin BLDC Rotary x 1	Twin BLDC Rotary x 1	Twin BLDC Rotary x 1	Twin BLDC Rotary x 1
	Output		kW	(4.45)	(4.45)	(1.79)	(1.79)
	Model Name		-	UG4T150FUDJQSS x 1	UG4T150FUDJQSS x 1	UG4T200FUAE4SS x 1	UG4T200FUAE4SS x 1
	Oil	Type	-	POE	POE	POE	POE
		Initial Charge	cc	650	650	650	650
Fan	Type		-	Propeller Fan/BLDC	Propeller Fan/BLDC	Propeller Fan/BLDC	Propeller Fan/BLDC
	Output x n		W	35 x 1	35 x 1	45 x 1	124 x 1
	Air Flow Rate		CMM	30	33	38	48
			VS	506.67	551.67	633.33	791.67
Piping Connections	Liquid Pipe		Ø, mm	6.35 x 2	6.35 x 2	6.35 x 3	6.35 x 3
			Ø, inch	1/4" x 2	1/4" x 2	1/4" x 3	1/4" x 3
	Gas Pipe		Ø, mm	9.52 x 2	9.52 + 12.70	9.52 x 2 + 12.70	9.52 + 12.70 x 2
			Ø, inch	3/8" x 2	3/8" + 1/2"	3/8" x 2 + 1/2"	3/8" + 1/2" x 2
	Installation Limitation	Max. Length	m	20(25)	20(25)	20(25)	20(25)
		Max. Height	m	15(15)	15(15)	15(15)	15(15)
Refrigerant	Type		-	R410A	R410A	R410A	R410A
	Factory Charging		kg	1.30	1.60	2.20	2.20
Sound 3)	Sound Pressure		dB(A)	45.0	46.0	46.0	48.0
	Sound Power		dB(A)	61.0	61.0	61.0	63.0
External Dimension	Net Weight		kg	37.0	40.0	49.0	57.0
	Shipping Weight		kg	40.0	43.0	53.0	61.0
	Net Dimensions (WxHxD)		mm	790 x 545 x 285	790 x 545 x 285	880 x 638 x 310	880 x 798 x 310
	Shipping Dimensions (WxHxD)		mm	926 x 599 x 382	926 x 599 x 382	1,053 x 695 x 413	1,023 x 889 x 413
Operating Temp. Range	Cooling		°C	-5.0 ~ 46.0	-5.0 ~ 46.0	-5.0 ~ 46.0	-5.0 ~ 46.0
	Heating		°C	-15.0 ~ 24.0	-15.0 ~ 24.0	-15.0 ~ 24.0	-15.0 ~ 24.0

* All figures comply with EN14511

1) Nominal cooling capacities are based on;
Indoor temperature : 27°C DB, 19°C WB / Outdoor temperature : 35°C DB, Equivalent refrigerant piping : 5m(4/5kW), 7.5m(5.2/6kW), Level differences : 0m

2) Nominal heating capacities are based on;
Indoor temperature : 20°C DB, 15°C WB / Outdoor temperature : 7°C DB, 6°C WB, Equivalent refrigerant piping : 5m(4/5kW), 7.5m(5.2/6kW), Level differences : 0m

3) Sound level was acquired in an anechoic room. Thus actual noise level may be different depending on the installation conditions.

Model Name				AJ070FCJ4EH/EU	AJ080FCJ4EH/EU	AJ100FCJ5EH/EU
Power Supply			Ø, #, V, Hz	1,2,220-240,50	1,2,220-240,50	1,2,220-240,50
Mode			-	HEAT PUMP	HEAT PUMP	HEAT PUMP
Performance	HP		HP	2.50	3.00	3.50
	Capacity (Nominal)	Cooling 1)	kW	7.00	8.00	10.00
			Btu/h	23,900	27,300	34,100
		Heating 2)	kW	8.60	9.30	12.00
			Btu/h	29,300	31,700	40,900
Power	Power Input (Nominal)	Cooling 1)	kW	1.90	2.30	2.90
		Heating 2)	kW	2.00	2.20	2.93
	Current Input (Nominal)	Cooling 1)	A	8.70	10.50	13.30
		Heating 2)	A	9.20	10.10	13.40
	MCA		A	18.7	18.7	26.2
	MFA		A	20.75	20.75	28.8
Energy Efficiency	Nominal Cooling(EER) 1)		-	3.68	3.48	3.45
	Nominal Heating(COP) 1)		-	4.30	4.23	4.10
Compressor	Type		-	Twin BLDC Rotary x 1	Twin BLDC Rotary x 1	Twin BLDC Rotary x 1
	Output		kW	(7.77)	(7.77)	(11.37)
	Model Name		-	G8T260FUAEW-SS x 1	G8T260FUAEW-SS x 1	UG8T300FUBJUSG x 1
	Oil	Type	-	POE	POE	POE
		Initial Charge	cc	700	700	1200
Fan	Type		-	Propeller Fan/BLDC	Propeller Fan/BLDC	Propeller Fan/BLDC
	Output x n		W	124 x 1	124 x 1	150 x 1
	Air Flow Rate		CMM	46	47	71
			VS	770.00	781.67	1,176.67
Piping Connections	Liquid Pipe		Ø, mm	6.35 x 4	6.35 x 4	6.35 x 5
			Ø, inch	1/4" x 4	1/4" x 4	1/4" x 5
	Gas Pipe		Ø, mm	9.52 x 2 + 12.70 x 2	9.52 x 2 + 12.70 x 2	9.52 x 2 + 12.70 x 3
			Ø, inch	3/8" x 2 + 1/2" x 2	3/8" x 2 + 1/2" x 2	3/8" x 2 + 1/2" x 3
	Installation Limitation	Max. Length	m	25(30)	25(30)	25(30)
		Max. Height	m	15(15)	15(15)	15(15)
Refrigerant	Type		-	R410A	R410A	R410A
	Factory Charging		kg	2.80	2.80	3.30
Sound 3)	Sound Pressure		dB(A)	48.0	49.0	54.0
	Sound Power		dB(A)	63.0	63.0	70.0
External Dimension	Net Weight		kg	65.0	65.0	74.5
	Shipping Weight		kg	70.0	70.0	80.0
	Net Dimensions (WxHxD)		mm	880 x 798 x 310	880 x 798 x 310	940 x 998 x 330
	Shipping Dimensions (WxHxD)		mm	1,023 x 889 x 413	1,023 x 889 x 413	995 x 1,096 x 426
Operating Temp. Range	Cooling		°C	-5.0 ~ 46.0	-5.0 ~ 46.0	-10.0 ~ 46.0
	Heating		°C	-15.0 ~ 24.0	-15.0 ~ 24.0	-15.0 ~ 24.0

* All figures comply with EN14511

1) Nominal cooling capacities are based on;
Indoor temperature : 27°C DB, 19°C WB / Outdoor temperature : 35°C DB, Equivalent refrigerant piping : 5m(4/5kW), 7.5m(5.2/6kW), Level differences : 0m

2) Nominal heating capacities are based on;
Indoor temperature : 20°C DB, 15°C WB / Outdoor temperature : 7°C DB, 6°C WB, Equivalent refrigerant piping : 5m(4/5kW), 7.5m(5.2/6kW), Level differences : 0m

3) Sound level was acquired in an anechoic room. Thus actual noise level may be different depending on the installation conditions.

1 Specifications

1-2. Indoor units

1) P series (Maldives)

Model Name				AR07FSFPDGMNEU	AR09FSFPDGMNET	AR12FSFPDGMNET
Power Supply			Ø, #, V, Hz	1, 2, 220~240, 50	1, 2, 220~240, 50	1, 2, 220~240, 50
Mode			-	HP	HP	HP
Performance	Capacity (Nominal)	Cooling 1)	kW	2.0	2.5	3.5
			Btu/h	6,800	8,500	11,900
		Heating 2)	kW	2.2	3.3	4.0
			Btu/h	7,500	11,300	13,600
Power	Power Input (Nominal)	Cooling 1)	W	30	50	50
		Heating 2)	W	30	50	50
	Current Input (Nominal)	Cooling 1)	A	0.18	0.40	0.40
		Heating 2)	A	0.18	0.40	0.40
Fan	Motor	Type	-	Crossflow Fan / SSR	Crossflow Fan / SSR	Crossflow Fan / SSR
		Output	W	23	23	23
		Number of Unit	EA	1	1	1
	Air Flow Rate	High / Mid / Low	CMM	7.9 / 7 / 6.1	9.4 / 8.7 / 7.9	10.1 / 9 / 7.9
	External Pressure	Min / Std / Max	mmAq	-	-	-
			Pa	-	-	-
Option Code			-	011405-1740E9-271416 -37F501-034244-112F40	011405-18421D-271921 -37F501-034244-112F40	011405-19422C-272328 -37F501-034D4C-11494E
Piping Connections	Liquid Pipe		Ø,mm	6.35	6.35	6.35
			Ø, inch	1/4	1/4	1/4
	Gas Pipe		Ø,mm	9.52	9.52	9.52
			Ø, inch	3/8	3/8	3/8
	Drain Pipe		Ø,mm	ID 18 Hose	ID 18 Hose	ID 18 Hose
Refrigerant	Type		-	R410A	R410A	R410A
	Control Method		-	EEV (External)	EEV (External)	EEV (External)
Sound	Sound Pressure	High / Mid / Low / Silence	dBA	31 / 28 / 27 / 23	36 / 33 / 30 / 23	37 / 34 / 30 / 22
Dimensions	Net Weight		kg	9	9	9
	Shipping Weight		kg	11	11	11
	Net Dimensions (W×H×D)		mm	820 x 286 x 205	820 x 286 x 205	820 x 286 x 205
	Shipping Dimensions (W×H×D)		mm	892 x 355 x 263	892 x 355 x 263	892 x 355 x 263
Panel Size	Panel Model		-	-	-	-
	Panel Net Weight		kg	-	-	-
	Shipping Weight		kg	-	-	-
	Net Dimensions (W×H×D)		mm	-	-	-
	Shipping Dimensions (W×H×D)		mm	-	-	-
Additional Accessories	Drain Pump	Drain Pump	- / Model	-	-	-
		Max. lifting Height / Displacement	mm / liter/h	-	-	-
	Air Filter		-	Full HD Filter 90	Full HD Filter 90	Full HD Filter 90

* All figures comply with EN14511

1) Nominal cooling capacities are based on;
Indoor temperature : 27°C DB, 19°C WB / Outdoor temperature : 35°C DB, Equivalent refrigerant piping : 5m , Level differences : 0m

2) Nominal heating capacities are based on;
Indoor temperature : 20°C DB, 15°C WB / Outdoor temperature : 7°C DB, 6°C WB, Equivalent refrigerant piping : 5m, Level differences : 0m

3) Sound level was acquired in an anechoic room. Thus actual noise level may be different depending on the installation conditions.

Model Name				AR18FSFPDGMNEU	AR24FSFPDGMNEU
Power Supply			Ø, #, V, Hz	1, 2, 220~240, 50	1, 2, 220~240, 50
Mode			-	HP	HP
Performance	Capacity (Nominal)	Cooling 1)	kW	5.0	6.8
			Btu/h	17,100	23,200
		Heating 2)	kW	6.0	7.8
			Btu/h	20,500	26,600
Power	Power Input (Nominal)	Cooling 1)	W	40	60
		Heating 2)	W	40	60
	Current Input (Nominal)	Cooling 1)	A	0.30	0.45
		Heating 2)	A	0.30	0.45
Fan	Motor	Type	-	Crossflow Fan / BLDC	Crossflow Fan / BLDC
		Output	W	27	27
		Number of Unit	EA	1	1
	Air Flow Rate	High / Mid / Low	CMM	14.2 / 12.3 / 11.2	17.8 / 14.3 / 10.6
	External Pressure	Min / Std / Max	mmAq	-	-
			Pa	-	-
Option Code			-	012405-15423E-27323C -37F601-034B49-114049	012405-18428C-27444E -37F301-03464D-114647
Piping Connections	Liquid Pipe		Ø,mm	6.35	6.35
			Ø, inch	1/4	1/4
	Gas Pipe		Ø,mm	12.7	15.88
			Ø, inch	1/2	5/8
	Drain Pipe		Ø,mm	ID 18 Hose	ID 18 Hose
Refrigerant	Type		-	R410A	R410A
	Control Method		-	EEV (External)	EEV (External)
Sound	Sound Pressure	High / Mid / Low / Silence	dBA	40 / 37 / 34 / 27	44 / 39 / 35 / 29
Dimensions	Net Weight		kg	13	13
	Shipping Weight		kg	16	16
	Net Dimensions (W×H×D)		mm	1,065 x 230 x 298	1,065 x 230 x 298
	Shipping Dimensions (W×H×D)		mm	1,137 x 377 x 299	1,137 x 377 x 299
Panel Size	Panel Model		-	-	-
	Panel Net Weight		kg	-	-
	Shipping Weight		kg	-	-
	Net Dimensions (W×H×D)		mm	-	-
	Shipping Dimensions (W×H×D)		mm	-	-
Additional Accessories	Drain Pump	Drain Pump	- / Model	-	-
		Max. lifting Height / Displacement	mm / liter/h	-	-
	Air Filter		-	Full HD Filter 90	Full HD Filter 90

* All figures comply with EN14511

1) Nominal cooling capacities are based on;
Indoor temperature : 27°C DB, 19°C WB / Outdoor temperature : 35°C DB, Equivalent refrigerant piping : 5m , Level differences : 0m

2) Nominal heating capacities are based on;
Indoor temperature : 20°C DB, 15°C WB / Outdoor temperature : 7°C DB, 6°C WB, Equivalent refrigerant piping : 5m, Level differences : 0m

3) Sound level was acquired in an anechoic room. Thus actual noise level may be different depending on the installation conditions.

1 Specifications

1-2. Indoor units

2) DELUXE (Maldives++)

Model Name				AR07FSFPESNNEU	AR09FSFPESNNEU	AR12FSFPESNNEU
Power Supply			Ø, #, V, Hz	1, 2, 220~240, 50	1, 2, 220~240, 50	1, 2, 220~240, 50
Mode			-	HP	HP	HP
Performance	Capacity (Nominal)	Cooling 1)	kW	2.0	2.5	3.5
			Btu/h	6,800	8,500	11,900
		Heating 2)	kW	2.2	3.3	4.0
			Btu/h	7,500	11,300	13,600
Power	Power Input (Nominal)	Cooling 1)	W	30	50	50
		Heating 2)	W	30	50	50
	Current Input (Nominal)	Cooling 1)	A	0.18	0.40	0.40
		Heating 2)	A	0.18	0.40	0.40
Fan	Motor	Type	-	Crossflow Fan / SSR	Crossflow Fan / SSR	Crossflow Fan / SSR
		Output	W	23	23	23
		Number of Unit	EA	1	1	1
	Air Flow Rate	High / Mid / Low	CMM	7.9 / 7 / 6.1	9.4 / 8.7 / 7.9	10.1 / 9 / 7.9
	External Pressure	Min / Std / Max	mmAq	-	-	-
			Pa	-	-	-
Option Code			-	015305-1740E9-271416 -37F601-033E3B-102E3E	015305-19422E-271921 -37F601-033E3B-102E3E	015305-17424E-272328 -37F601-034743-10484D
Piping Connections	Liquid Pipe		Ø,mm	6.35	6.35	6.35
			Ø, inch	1/4	1/4	1/4
	Gas Pipe		Ø,mm	9.52	9.52	9.52
			Ø, inch	3/8	3/8	3/8
	Drain Pipe		Ø,mm	ID 18 Hose	ID 18 Hose	ID 18 Hose
Refrigerant	Type		-	R410A	R410A	R410A
	Control Method		-	EEV (External)	EEV (External)	EEV (External)
Sound	Sound Pressure	High / Mid / Low / Silence	dBA	31 / 28 / 27 / 23	37 / 34 / 31 / 24	39 / 35 / 31 / 24
Dimensions	Net Weight		kg	9	9	9
	Shipping Weight		kg	11	11	11
	Net Dimensions (W×H×D)		mm	820 x 286 x 205	820 x 286 x 205	820 x 286 x 205
	Shipping Dimensions (W×H×D)		mm	892 x 355 x 263	892 x 355 x 263	892 x 355 x 263
Panel Size	Panel Model		-	-	-	-
	Panel Net Weight		kg	-	-	-
	Shipping Weight		kg	-	-	-
	Net Dimensions (W×H×D)		mm	-	-	-
	Shipping Dimensions (W×H×D)		mm	-	-	-
Additional Accessories	Drain Pump	Drain Pump	- / Model	-	-	-
		Max. lifting Height / Displacement	mm / liter/h	-	-	-
	Air Filter		-	Full HD Filter 90	Full HD Filter 90	Full HD Filter 90

* All figures comply with EN14511

1) Nominal cooling capacities are based on;
Indoor temperature : 27°C DB, 19°C WB / Outdoor temperature : 35°C DB, Equivalent refrigerant piping : 5m , Level differences : 0m

2) Nominal heating capacities are based on;
Indoor temperature : 20°C DB, 15°C WB / Outdoor temperature : 7°C DB, 6°C WB, Equivalent refrigerant piping : 5m, Level differences : 0m

3) Sound level was acquired in an anechoic room. Thus actual noise level may be different depending on the installation conditions.

Model Name				AR18FSFPESNNEU	AR24FSFPESNNEU
Power Supply			Ø, #, V, Hz	1, 2, 220~240, 50	1, 2, 220~240, 50
Mode			-	HP	HP
Performance	Capacity (Nominal)	Cooling 1)	kW	5.0	6.8
			Btu/h	17,100	23,200
		Heating 2)	kW	6.0	7.8
			Btu/h	20,500	26,600
Power	Power Input (Nominal)	Cooling 1)	W	40	60
		Heating 2)	W	40	60
	Current Input (Nominal)	Cooling 1)	A	0.30	0.45
		Heating 2)	A	0.30	0.45
Fan	Motor	Type	-	Crossflow Fan / BLDC	Crossflow Fan / BLDC
		Output	W		
		Number of Unit	EA	1	1
	Air Flow Rate	High / Mid / Low	CMM	14.2 / 12.3 / 11.2	17.8 / 14.3 / 10.6
	External Pressure	Min / Std / Max	mmAq	-	-
			Pa	-	-
Option Code			-	012405-15423E-27323C -37F601-034B49-114049	012405-18428C-27444E -37F301-03464D-114647
Piping Connections	Liquid Pipe		Ø,mm	6.35	6.35
			Ø, inch	1/4	1/4
	Gas Pipe		Ø,mm	12.7	15.88
			Ø, inch	1/2	5/8
	Drain Pipe		Ø,mm	ID 18 Hose	ID 18 Hose
Refrigerant	Type		-	R410A	R410A
	Control Method		-	EEV (External)	EEV (External)
Sound	Sound Pressure	High / Mid / Low / Silence	dBA	41 / 37 / 34 / 27	44 / 39 / 35 / 29
Dimensions	Net Weight		kg	13	13
	Shipping Weight		kg	16	16
	Net Dimensions (W×H×D)		mm	1,065 x 230 x 298	1,065 x 230 x 298
	Shipping Dimensions (W×H×D)		mm	1,137 x 377 x 299	1,137 x 377 x 299
Panel Size	Panel Model		-	-	-
	Panel Net Weight		kg	-	-
	Shipping Weight		kg	-	-
	Net Dimensions (W×H×D)		mm	-	-
	Shipping Dimensions (W×H×D)		mm	-	-
Additional Accessories	Drain Pump	Drain Pump	- / Model	-	-
		Max. lifting Height / Displacement	mm / liter/h	-	-
	Air Filter		-	Full HD Filter 90	Full HD Filter 90

* All figures comply with EN14511

1) Nominal cooling capacities are based on;
Indoor temperature : 27°C DB, 19°C WB / Outdoor temperature : 35°C DB, Equivalent refrigerant piping : 5m , Level differences : 0m

2) Nominal heating capacities are based on;
Indoor temperature : 20°C DB, 15°C WB / Outdoor temperature : 7°C DB, 6°C WB, Equivalent refrigerant piping : 5m, Level differences : 0m

3) Sound level was acquired in an anechoic room. Thus actual noise level may be different depending on the installation conditions.

1 Specifications

1-2. Indoor units

3) Neo Forte

Model Name				MH020FNEA	MH026FNEA	MH035FNEA	MH052FNEA
Power Supply			Ø, #, V, Hz	1, 2, 220~240, 50	1, 2, 220~240, 50	1, 2, 220~240, 50	1, 2, 220~240, 50
Mode			-	HP	HP	HP	HP
Performance	Capacity (Nominal)	Cooling 1)	kW	2.0	2.6	3.5	5.2
			Btu/h	6,800	8,900	11,900	17,700
		Heating 2)	kW	2.2	2.9	3.8	5.6
			Btu/h	7,500	9,900	13,000	19,100
Power	Power Input (Nominal)	Cooling 1)	W	30	30	35	50
		Heating 2)	W	30	30	35	50
	Current Input (Nominal)	Cooling 1)	A	0.18	0.18	0.19	0.30
		Heating 2)	A	0.18	0.18	0.19	0.30
Fan	Motor	Type	-	Crossflow Fan / SSR	Crossflow Fan / SSR	Crossflow Fan / SSR	Crossflow Fan / SSR
		Output	W	23	23	23	40
		Number of unit	EA	1	1	1	1
	Air Flow Rate	High / Mid / Low	CMM	7.7 / - / -	8.3 / - / -	9.5 / - / -	13.2 / - / -
	External Pressure	Min / Std / Max	mmAq	-	-	-	-
			Pa	-	-	-	-
Option Code			-	026402-13225E -200000-300000	027402-14221A -200000-300000	027402-16224D -200000-300000	026402-19228F -200000-300000
Piping Connections	Liquid Pipe		Ø,mm	6.35	6.35	6.35	6.35
			Ø, inch	1/4	1/4	1/4	1/4
	Gas Pipe		Ø,mm	9.52	9.52	9.52	12.7
			Ø, inch	3/8	3/8	3/8	1/2
	Drain Pipe		Ø,mm	ID 18 Hose	ID 18 Hose	ID 18 Hose	ID 18 Hose
Refrigerant	Type		-	R410A	R410A	R410A	R410A
	Control Method		-	EEV (External)	EEV (External)	EEV (External)	EEV (External)
Sound	Sound Pressure	High / Mid / Low	dBA	32 / 28 / 23	32 / 28 / 23	36 / 30 / 23	40 / 35 / 30
Dimensions	Net Weight		kg	7.8	7.8	7.8	13
	Shipping Weight		kg	9.4	9.4	9.4	16
	Net Dimensions (W×H×D)		mm	825 x 285 x 189	825 x 285 x 189	825 x 285 x 189	1,065 x 298x218
	Shipping Dimensions (W×H×D)		mm	900 x 349 x 252	900 x 349 x 252	900 x 349 x 252	1,137 x 377 x 299
Panel Size	Panel Model		-	-	-	-	-
	Panel Net Weight		kg	-	-	-	-
	Shipping Weight		kg	-	-	-	-
	Net Dimensions (W×H×D)		mm	-	-	-	-
	Shipping Dimensions (W×H×D)		mm	-	-	-	-
Additional Accessories	Drain Pump	Drain Pump	- / Model	-	-	-	-
		Max. lifting Height / Displacement	mm / liter/ h	-	-	-	-
	Air Filter		-	Long life filter	Long life filter	Long life filter	Long life filter

* All figures comply with EN14511

1) Nominal cooling capacities are based on;
Indoor temperature : 27°C DB, 19°C WB / Outdoor temperature : 35°C DB, Equivalent refrigerant piping : 7.5m , Level differences : 0m

2) Nominal heating capacities are based on;
Indoor temperature : 20°C DB, 15°C WB / Outdoor temperature : 7°C DB, 6°C WB, Equivalent refrigerant piping : 7.5m, Level differences : 0m

3) Sound level was acquired in an anechoic room. Thus actual noise level may be different depending on the installation conditions.

4) Crystal

Model Name				MH020FAEA	MH026FAEA	MH035FAEA	MH052FAEA
Power Supply			Ø, #, V, Hz	1, 2, 220~240, 50	1, 2, 220~240, 50	1, 2, 220~240, 50	1, 2, 220~240, 50
Mode			-	HP	HP	HP	HP
Performance	Capacity (Nominal)	Cooling 1)	kW	2.0	2.6	3.5	5.2
			Btu/h	6,800	8,900	11,900	17,700
		Heating 2)	kW	2.2	2.9	3.8	5.6
			Btu/h	7,500	9,900	13,000	19,100
Power	Power Input (Nominal)	Cooling 1)	W	30	30	35	50
		Heating 2)	W	30	30	35	50
	Current Input (Nominal)	Cooling 1)	A	0.18	0.18	0.19	0.30
		Heating 2)	A	0.18	0.18	0.19	0.30
Fan	Motor	Type	-	Crossflow Fan / SSR	Crossflow Fan / SSR	Crossflow Fan / SSR	Crossflow Fan / SSR
		Output	W	23	23	23	40
		Number of unit	EA	1	1	1	1
	Air Flow Rate	High / Mid / Low	CMM	7.9 / - / -	9.1 / - / -	9.8 / - / -	14.2 / - / -
	External Pressure	Min / Std / Max	mmAq	-	-	-	-
			Pa	-	-	-	-
Option Code			-	047402-1320E9 -200000-300000	047402-14221C -200000-300000	047402-16223C -200000-300000	047406-19223E -200000-300000
Piping Connections	Liquid Pipe		Ø,mm	6.35	6.35	6.35	6.35
			Ø, inch	1/4	1/4	1/4	1/4
	Gas Pipe		Ø,mm	9.52	9.52	9.52	12.7
			Ø, inch	3/8	3/8	3/8	1/2
	Drain Pipe		Ø,mm	ID 18 Hose	ID 18 Hose	ID 18 Hose	ID 18 Hose
Refrigerant	Type		-	R410A	R410A	R410A	R410A
	Control Method		-	EEV (External)	EEV (External)	EEV (External)	EEV (External)
Sound	Sound Pressure	High / Mid / Low	dBA	31 / 26 / 21	31 / 26 / 21	35 / 28 / 21	40 / 35 / 30
Dimensions	Net Weight		kg	9	9	9	13
	Shipping Weight		kg	11	11	11	16
	Net Dimensions (W×H×D)		mm	820 x 286 x 190	820 x 286 x 190	820 x 286 x 190	1099 x 315 x 217
	Shipping Dimensions (W×H×D)		mm	892 x 355 x 263	892 x 355 x 263	892 x 355 x 263	1137 x 377 x 299
Panel Size	Panel Model		-	-	-	-	-
	Panel Net Weight		kg	-	-	-	-
	Shipping Weight		kg	-	-	-	-
	Net Dimensions (W×H×D)		mm	-	-	-	-
	Shipping Dimensions (W×H×D)		mm	-	-	-	-
Additional Accessories	Drain Pump	Drain Pump	- / Model	-	-	-	-
		Max. lifting Height / Displacement	mm / liter/ h	-	-	-	-
	Air Filter		-	Long life filter	Long life filter	Long life filter	Long life filter

* All figures comply with EN14511

1) Nominal cooling capacities are based on;
Indoor temperature : 27°C DB, 19°C WB / Outdoor temperature : 35°C DB, Equivalent refrigerant piping : 7.5m , Level differences : 0m

2) Nominal heating capacities are based on;
Indoor temperature : 20°C DB, 15°C WB / Outdoor temperature : 7°C DB, 6°C WB, Equivalent refrigerant piping : 7.5m, Level differences : 0m

3) Sound level was acquired in an anechoic room. Thus actual noise level may be different depending on the installation conditions.

1 Specifications

1-2. Indoor units

5) New Crystal

Model Name				AR09FSSEDWUNEU	AR12FSSEDWUNEU
Power Supply			Ø, #, V, Hz	1, 2, 220~240, 50	1, 2, 220~240, 50
Mode			-	HP	HP
Performance	Capacity (Nominal)	Cooling 1)	kW	2.5	3.5
			Btu/h	8,500	11,900
		Heating 2)	kW	3.2	4.0
			Btu/h	10,900	13,600
Power	Power Input (Nominal)	Cooling 1)	W	50	30
		Heating 2)	W	50	30
	Current Input (Nominal)	Cooling 1)	A	0.40	0.40
		Heating 2)	A	0.40	0.40
Fan	Motor	Type	-	Crossflow Fan / SSR	Crossflow Fan / SSR
		Output	W	30	30
		Number of unit	EA	1	1
	Air Flow Rate	High / Mid / Low	CMM	12.0 / 10.5 / 9.0	13.0 / 11.0 / 9.0
	External Pressure	Min / Std / Max	mmAq	-	-
			Pa	-	-
Option Code			-	013345-16C24C-271920 -372501-03413B-112E3E	013345-16C26C-272328 -372501-034A44-11464D
Piping Connections	Liquid Pipe		Ø,mm	6.35	6.35
			Ø, inch	1/4	1/4
	Gas Pipe		Ø,mm	9.52	9.52
			Ø, inch	3/8	3/8
	Drain Pipe		Ø,mm	ID 18 Hose	ID 18 Hose
Refrigerant	Type		-	R410A	R410A
	Control Method		-	EEV (External)	EEV (External)
Sound	Sound Pressure	High / Mid / Low / Silence	dBA	37 / 33 / 29 / 22	40 / 35 / 30 / 23
Dimensions	Net Weight		kg	9.0	9.0
	Shipping Weight		kg	11.0	11.0
	Net Dimensions (W×H×D)		mm	890 x 285 x 202	890 x 285 x 202
	Shipping Dimensions (W×H×D)		mm	950 x 360 x 260	950 x 360 x 260
Panel Size	Panel Model		-	-	-
	Panel Net Weight		kg	-	-
	Shipping Weight		kg	-	-
	Net Dimensions (W×H×D)		mm	-	-
	Shipping Dimensions (W×H×D)		mm	-	-
Additional Accessories	Drain Pump	Drain Pump	- / Model	-	-
		Max. lifting Height / Displacement	mm / liter/ h	-	-
	Air Filter		-	-	-

* All figures comply with EN14511

1) Nominal cooling capacities are based on;
Indoor temperature : 27°C DB, 19°C WB / Outdoor temperature : 35°C DB, Equivalent refrigerant piping : 7.5m , Level differences : 0m

2) Nominal heating capacities are based on;
Indoor temperature : 20°C DB, 15°C WB / Outdoor temperature : 7°C DB, 6°C WB, Equivalent refrigerant piping : 7.5m, Level differences : 0m

3) Sound level was acquired in an anechoic room. Thus actual noise level may be different depending on the installation conditions.

Model Name				AR18FSSEDWUNEU	AR24FSSEDWUNEU
Power Supply			Ø, #, V, Hz	1, 2, 220~240, 50	1, 2, 220~240, 50
Mode			-	HP	HP
Performance	Capacity (Nominal)	Cooling 1)	kW	5.0	6.8
			Btu/h	17,100	23,200
		Heating 2)	kW	6.0	7.8
			Btu/h	20,500	26,600
Power	Power Input (Nominal)	Cooling 1)	W	40	60
		Heating 2)	W	40	60
	Current Input (Nominal)	Cooling 1)	A	0.30	0.45
		Heating 2)	A	0.30	0.45
Fan	Motor	Type	-	Crossflow Fan / SSR	Crossflow Fan / SSR
		Output	W	27	27
		Number of unit	EA	1	1
	Air Flow Rate	High / Mid / Low	CMM	15.5 / 14.0 / 12.5	18.5 / 14.5 / 11.0
	External Pressure	Min / Std / Max	mmAq	-	-
			Pa	-	-
Option Code			-	014345-16C340-27323C -37F601-034745-11404A	014345-18C28C-27444E -37F301-03484D-114646
Piping Connections	Liquid Pipe		Ø,mm	6.35	6.35
			Ø, inch	1/4	1/4
	Gas Pipe		Ø,mm	12.70	15.88
			Ø, inch	1/2	5/8
	Drain Pipe		Ø,mm	ID 18 Hose	ID 18 Hose
Refrigerant	Type		-	R410A	R410A
	Control Method		-	EEV (External)	EEV (External)
Sound	Sound Pressure	High / Mid / Low / Silence	dBA	37 / 33 / 29 / 22	40 / 35 / 30 / 23
Dimensions	Net Weight		kg	11.5	11.5
	Shipping Weight		kg	14.0	14.0
	Net Dimensions (W×H×D)		mm	1065 x 298 x 230	1065 x 298 x 230
	Shipping Dimensions (W×H×D)		mm	1125 x 375 x 290	1125 x 375 x 290
Panel Size	Panel Model		-	-	-
	Panel Net Weight		kg	-	-
	Shipping Weight		kg	-	-
	Net Dimensions (W×H×D)		mm	-	-
	Shipping Dimensions (W×H×D)		mm	-	-
Additional Accessories	Drain Pump	Drain Pump	- / Model	-	-
		Max. lifting Height / Displacement	mm / liter/ h	-	-
	Air Filter		-	-	-

* All figures comply with EN14511

1) Nominal cooling capacities are based on;
Indoor temperature : 27°C DB, 19°C WB / Outdoor temperature : 35°C DB, Equivalent refrigerant piping : 7.5m , Level differences : 0m

2) Nominal heating capacities are based on;
Indoor temperature : 20°C DB, 15°C WB / Outdoor temperature : 7°C DB, 6°C WB, Equivalent refrigerant piping : 7.5m, Level differences : 0m

3) Sound level was acquired in an anechoic room. Thus actual noise level may be different depending on the installation conditions.

1 Specifications

1-2. Indoor units

6) Y series (Jungfrau Premium)

Model Name				AR09FSSYAWTNEU	AR12FSSYAWTNEU	AR18FSSYAWTNEU
Power Supply			Ø, #, V, Hz	1, 2, 220~240, 50	1, 2, 220~240, 50	1, 2, 220~240, 50
Mode			-	HP	HP	HP
Performance	Capacity (Nominal)	Cooling 1)	kW	2.5	3.5	5.0
			Btu/h	8,500	11,900	17,100
		Heating 2)	kW	3.2	4.0	6.0
			Btu/h	10,900	13,600	20,500
Power	Power Input (Nominal)	Cooling 1)	W	50	50	50
		Heating 2)	W	50	50	50
	Current Input (Nominal)	Cooling 1)	A	0.40	0.40	0.40
		Heating 2)	A	0.40	0.40	0.40
Fan	Motor	Type	-	Crossflow Fan / SSR	Crossflow Fan / SSR	Crossflow Fan / SSR
		Output	W	27	27	27
		Number of unit	EA	1	1	1
	Air Flow Rate	High / Mid / Low	CMM	11.6 / 10.3 / 9	13.8 / 11.4 / 9	14.5 / 12.8 / 11
	External Pressure	Min / Std / Max	mmAq	-	-	-
			Pa	-	-	-
Option Code			-	010345-17C0F5 -271920-35F501 -034032-102D3E	010345-15C215 -272328-35F501 -034A3E-10474F	010245-16C23A -27323C-372501 -034853-114248
Piping Connections	Liquid Pipe		Ø,mm	6.35	6.35	6.35
			Ø, inch	1/4	1/4	1/4
	Gas Pipe		Ø,mm	9.52	9.52	12.7
			Ø, inch	3/8	3/8	1/2
	Drain Pipe		Ø,mm	ID 18 Hose	ID 18 Hose	ID 18 Hose
Refrigerant	Type		-	R410A	R410A	R410A
	Control Method		-	EEV (External)	EEV (External)	EEV (External)
Sound	Sound Pressure	High / Mid / Low / Silence	dBA	39 / 33 / 27 / 20	41 / 35 / 28 / 21	43 / 38 / 33 / 27
Dimensions	Net Weight		kg	11	11	11
	Shipping Weight		kg	13	13	14
	Net Dimensions (W×H×D)		mm	880 x 313x 237	880 x 313x 237	880 x 313x 237
	Shipping Dimensions (W×H×D)		mm	945 x 381 x 317	945 x 381 x 317	945 x 381 x 317
Panel Size	Panel Model		-	-	-	-
	Panel Net Weight		kg	-	-	-
	Shipping Weight		kg	-	-	-
	Net Dimensions (W×H×D)		mm	-	-	-
	Shipping Dimensions (W×H×D)		mm	-	-	-
Additional Accessories	Drain Pump	Drain Pump	- / Model	-	-	-
		Max. lifting Height / Displacement	mm / liter/h	-	-	-
	Air Filter		-	Full HD Filter 90	Full HD Filter 90	Full HD Filter 90

* All figures comply with EN14511

1) Nominal cooling capacities are based on;
Indoor temperature : 27°C DB, 19°C WB / Outdoor temperature : 35°C DB, Equivalent refrigerant piping : 7.5m , Level differences : 0m

2) Nominal heating capacities are based on;
Indoor temperature : 20°C DB, 15°C WB / Outdoor temperature : 7°C DB, 6°C WB, Equivalent refrigerant piping : 7.5m, Level differences : 0m

3) Sound level was acquired in an anechoic room. Thus actual noise level may be different depending on the installation conditions.

7) Slim 1way Cassette

Model Name				MH026FSEA	MH035FSEA
Power Supply			Ø, #, V, Hz	1, 2, 220~240, 50	1, 2, 220~240, 50
Mode			-	HP	HP
Performance	Capacity (Nominal)	Cooling 1)	kW	2.6	3.5
			Btu/h	8,900	11,900
		Heating 2)	kW	2.9	3.8
			Btu/h	9,900	13,000
Power	Power Input (Nominal)	Cooling 1)	W	45	50
		Heating 2)	W	45	50
	Current Input (Nominal)	Cooling 1)	A	0.23	0.25
		Heating 2)	A	0.23	0.25
Fan	Motor	Type	-	Crossflow Fan / SSR	Crossflow Fan / SSR
		Output	W	-	-
		Number of unit	EA	1	1
	Air Flow Rate	High / Mid / Low	CMM	6.2 / - / -	7.6 / - / -
	External Pressure	Min / Std / Max	mmAq	-	-
			Pa	-	-
Option Code			-	078605-1420F8 -200000-300000	075605-16225d -200000-300000
Piping Connections	Liquid Pipe		Ø,mm	6.35	6.35
			Ø, inch	1/4	1/4
	Gas Pipe		Ø,mm	9.52	9.52
			Ø, inch	3/8	3/8
	Drain Pipe		Ø,mm	VP20 (OD 26,ID 20)	VP20 (OD 26,ID 20)
Refrigerant	Type		-	R410A	R410A
	Control Method		-	EEV (External)	EEV (External)
Sound	Sound Pressure	High / Mid / Low	dBA	30 / 28 / 25	32 / 30 / 27
Dimensions	Net Weight		kg	10.5	11
	Shipping Weight		kg	13.5	14
	Net Dimensions (W×H×D)		mm	970 x 135 x 410	970 x 135 x 410
	Shipping Dimensions (W×H×D)		mm	1164 x 212 x 478	1164 x 212 x 478
Panel Size	Panel Model		-	PSSMA	PSSMA
	Panel Net Weight		kg	3.0	3.0
	Shipping Weight		kg	5.0	5.0
	Net Dimensions (W×H×D)		mm	1180 x 25 x 460	1180 x 25 x 460
	Shipping Dimensions (W×H×D)		mm	1259 x 144 x 539	1259 x 144 x 539
Additional Accessories	Drain Pump	Drain Pump	- / Model	Built-in	Built-in
		Max. lifting Height / Displacement	mm / liter/ h	750 / 24	750 / 24
	Air Filter		-	Long life filter	Long life filter

* All figures comply with EN14511

1) Nominal cooling capacities are based on;
Indoor temperature : 27°C DB, 19°C WB / Outdoor temperature : 35°C DB, Equivalent refrigerant piping : 7.5m , Level differences : 0m

2) Nominal heating capacities are based on;
Indoor temperature : 20°C DB, 15°C WB / Outdoor temperature : 7°C DB, 6°C WB, Equivalent refrigerant piping : 7.5m, Level differences : 0m

3) Sound level was acquired in an anechoic room. Thus actual noise level may be different depending on the installation conditions.

1 Specifications

1-2. Indoor units

8) Mini 4way Cassette

Model Name				AJN016NDEHA/EU	AJN020NDEHA/EU	AJN026NDEHA/EU
Power Supply			Ø, #, V, Hz	1,2,220-240,50	1,2,220-240,50	1,2,220-240,50
Mode			-	HP/HR	HP/HR	HP/HR
Performance	Capacity (Nominal)	Cooling 1)	kW	1.60	2	2.6
			Btu/h	5500	6800	8900
		Heating 2)	kW	2.00	2.2	2.9
			Btu/h	6800	7500	9900
Power	Power Input (Nominal)	Cooling 1)	W	19	19	19
		Heating 2)	W	19	19	19
	Current Input (Nominal)	Cooling 1)	A	0.51	0.51	0.51
		Heating 2)	A	0.51	0.51	0.51
Fan	Motor	Type	-	Turbo Fan	Turbo Fan	Turbo Fan
		Output	W	65	65	65
		Number of unit	EA	1	1	1
	Air Flow Rate	High / Mid / Low	CMM	9.90/8.20/6.90	9.90/8.20/6.90	9.90/8.20/6.90
	External Pressure	Min / Std / Max	mmAq	-	-	-
			Pa	-	-	-
Option Code			-	01507F-1660F8-231014-300000	01507F-1660F8-231416-300000	01507F-1660F8-231A21-300000
Piping Connections	Liquid Pipe		Ø,mm	6.35	6.35	6.35
			Ø, inch	1/4"	1/4"	1/4"
	Gas Pipe		Ø,mm	9.52	9.52	9.52
			Ø, inch	3/8"	3/8"	3/8"
	Drain Pipe		Ø,mm	VP25 (OD 32,ID 25)	VP25 (OD 32,ID 25)	VP25 (OD 32,ID 25)
Refrigerant	Type		-	R410A	R410A	R410A
	Control Method		-	EEV NOT INCLUDED	EEV NOT INCLUDED	EEV NOT INCLUDED
Field Wiring	Power Source Wire		mm^2	1/-	1/-	1/-
	Transmission Cable		mm^2	0.75/1	0.75/1	0.75/1
Sound	Sound Pressure	High / Mid / Low	dBA	33 / 29 / 24	33 / 29 / 34	34 / 30 / 25
Dimensions	Net Weight		kg	11	11	11
	Shipping Weight		kg	13	13	13
	Net Dimensions (W×H×D)		mm	575 x 250 x 575	575 x 250 x 575	575 x 250 x 575
	Shipping Dimensions (W×H×D)		mm	623 x 298 x 653	623 x 298 x 653	623 x 298 x 653
Panel Size	Panel Model		-	PC4SUSMA	PC4SUSMA	PC4SUSMA
	Panel Net Weight		kg	2.7	2.7	2.7
	Shipping Weight		kg	4.2	4.2	4.2
	Net Dimensions (W×H×D)		mm	670 x 45 x 670	670 x 45 x 670	670 x 45 x 670
	Shipping Dimensions (W×H×D)		mm	714 x 106 x 724	714 x 106 x 724	714 x 106 x 724
Additional Accessories	Drain Pump	Drain Pump	- / Model	Built-in	Built-in	Built-in
		Max. lifting Height / Displacement	mm / liter/ h	750 / 24	750 / 24	750 / 24
	Air Filter		-	Long life filter	Long life filter	Long life filter

* All figures comply with EN14511

1) Nominal cooling capacities are based on;
Indoor temperature : 27°C DB, 19°C WB / Outdoor temperature : 35°C DB, Equivalent refrigerant piping : 7.5m , Level differences : 0m

2) Nominal heating capacities are based on;
Indoor temperature : 20°C DB, 15°C WB / Outdoor temperature : 7°C DB, 6°C WB, Equivalent refrigerant piping : 7.5m, Level differences : 0m

3) Sound level was acquired in an anechoic room. Thus actual noise level may be different depending on the installation conditions.

Model Name				AJN035NDEHA/EU	AJN052NDEHA/EU
Power Supply			Ø, #, V, Hz	1,2,220-240,50	1,2,220-240,50
Mode			-	HP/HR	HP/HR
Performance	Capacity (Nominal)	Cooling 1)	kW	3.5	5.2
			Btu/h	11900	17700
		Heating 2)	kW	3.8	5.6
			Btu/h	13000	19100
Power	Power Input (Nominal)	Cooling 1)	W	22	28
		Heating 2)	W	22	28
	Current Input (Nominal)	Cooling 1)	A	0.52	0.53
		Heating 2)	A	0.52	0.53
Fan	Motor	Type	-	Turbo Fan	Turbo Fan
		Output	W	65	65
		Number of unit	EA	1	1
	Air Flow Rate	High / Mid / Low	CMM	10.70/9.00/7.40	12.40/10.70/9.00
	External Pressure	Min / Std / Max	mmAq	-	-
			Pa	-	-
Option Code			-	01507F-166219-232328-300000	01507F-17625D-23343C-300000
Piping Connections	Liquid Pipe		Ø,mm	6.35	6.35
			Ø, inch	1/4"	1/4"
	Gas Pipe		Ø,mm	9.52	12.7
			Ø, inch	3/8"	1/2"
	Drain Pipe		Ø,mm	VP25 (OD 32,ID 25)	VP25 (OD 32,ID 25)
Refrigerant	Type		-	R410A	R410A
	Control Method		-	EEV NOT INCLUDED	EEV NOT INCLUDED
Field Wiring	Power Source Wire		mm²	1/-	1/-
	Transmission Cable		mm²	0.75/1	0.75/1
Sound	Sound Pressure	High / Mid / Low	dBA	36 / 33 / 29	40 / 36 / 32
Dimensions	Net Weight		kg	11	11.7
	Shipping Weight		kg	13	13.7
	Net Dimensions (W×H×D)		mm	575 x 250 x 575	575 x 250 x 575
	Shipping Dimensions (W×H×D)		mm	623 x 298 x 653	623 x 298 x 653
Panel Size	Panel Model		-	PC4SUSMA	PC4SUSMA
	Panel Net Weight		kg	2.7	2.7
	Shipping Weight		kg	4.2	4.2
	Net Dimensions (W×H×D)		mm	670 x 45 x 670	670 x 45 x 670
	Shipping Dimensions (W×H×D)		mm	714 x 106 x 724	714 x 106 x 724
Additional Accessories	Drain Pump	Drain Pump	- / Model	Built-in	Built-in
		Max. lifting Height / Displacement	mm / liter/ h	750 / 24	750 / 24
	Air Filter		-	Long life filter	Long life filter

* All figures comply with EN14511

1) Nominal cooling capacities are based on;
Indoor temperature : 27°C DB, 19°C WB / Outdoor temperature : 35°C DB, Equivalent refrigerant piping : 7.5m , Level differences : 0m

2) Nominal heating capacities are based on;
Indoor temperature : 20°C DB, 15°C WB / Outdoor temperature : 7°C DB, 6°C WB, Equivalent refrigerant piping : 7.5m, Level differences : 0m

3) Sound level was acquired in an anechoic room. Thus actual noise level may be different depending on the installation conditions.

1 Specifications

1-2. Indoor units

9) Slim & MSP Duct

Model Name				NJ026LHXEA	NJ035LHXEA	MH052FUEA
Power Supply			Ø, #, V, Hz	1, 2, 220~240, 50	1, 2, 220~240, 50	1, 2, 220~240, 50
Mode			-	HP	HP	HP
Performance	Capacity (Nominal)	Cooling 1)	kW	2.6	3.5	5.2
			Btu/h	8,900	11,900	17,700
		Heating 2)	kW	2.9	3.8	6.0
			Btu/h	9,900	13,000	20,500
Power	Power Input (Nominal)	Cooling 1)	W	80	80	170
		Heating 2)	W	80	80	170
	Current Input (Nominal)	Cooling 1)	A	0.40	0.40	1.04
		Heating 2)	A	0.40	0.40	1.04
Fan	Motor	Type	-	Sirroco Fan / SSR	Sirroco Fan / SSR	Sirroco Fan / SSR
		Output	W	29	29	124
		Number of unit	EA	1	1	1
	Air Flow Rate	High / Mid / Low	CMM	8.6 / - / -	9.8 / - / -	16.3 / - / -
	External Pressure	Min / Std / Max	mmAq	0/2/4	0/2/4	0/4/8
			Pa	0/19.6/39.2	0/19.6/39.2	0/392/78.5
Option Code			-	015201-14020C -200000-300000	015201-16026E -200000-300000	012221-1943A2 -200000-300000
Piping Connections	Liquid Pipe		Ø,mm	6.35	6.35	6.35
			Ø, inch	1/4	1/4	1/4
	Gas Pipe		Ø,mm	9.52	9.52	12.7
			Ø, inch	3/8	3/8	1/2
	Drain Pipe		Ø,mm	VP25 (OD 32,ID 25)	VP25 (OD 32,ID 25)	VP25 (OD 32,ID 25)
Refrigerant	Type		-	R410A	R410A	R410A
	Control Method		-	EEV (External)	EEV (External)	EEV (External)
Sound	Sound Pressure	High / Mid / Low	dBA	30 / 28 / 25	32 / 30 / 27	37 / 35 / 33
Dimensions	Net Weight		kg	26	26	29
	Shipping Weight		kg	31	31	34
	Net Dimensions (W×H×D)		mm	900 x 199 x 600	900 x 199 x 600	900 x 260 x 480
	Shipping Dimensions (W×H×D)		mm	1133 x 330 x 730	1133 x 330 x 730	1146 x 345 x 584
Panel Size	Panel Model		-	-	-	-
	Panel Net Weight		kg	-	-	-
	Shipping Weight		kg	-	-	-
	Net Dimensions (W×H×D)		mm	-	-	-
	Shipping Dimensions (W×H×D)		mm	-	-	-
Additional Accessories	Drain Pump	Drain Pump	- / Model	Optional / MDP-E075SEE3	Optional / MDP-E075SEE3	Optional / MDP-M075SGU3
		Max. lifting Height / Displacement	mm / liter/ h	750 / 24	750 / 24	750 / 24
	Air Filter		-	Long life filter	Long life filter	Long life filter

* All figures comply with EN14511

1) Nominal cooling capacities are based on;
Indoor temperature : 27°C DB, 19°C WB / Outdoor temperature : 35°C DB, Equivalent refrigerant piping : 7.5m , Level differences : 0m

2) Nominal heating capacities are based on;
Indoor temperature : 20°C DB, 15°C WB / Outdoor temperature : 7°C DB, 6°C WB, Equivalent refrigerant piping : 7.5m, Level differences : 0m

3) Sound level was acquired in an anechoic room. Thus actual noise level may be different depending on the installation conditions.

10) Console

Model Name				MH026FJEA	MH035FJEA	MH052FJEA
Power Supply			Ø, #, V, Hz	1, 2, 220~240, 50	1, 2, 220~240, 50	1, 2, 220~240, 50
Mode			-	HP	HP	HP
Performance	Capacity (Nominal)	Cooling 1)	kW	2.6	3.5	5.2
			Btu/h	8,900	11,900	17,700
		Heating 2)	kW	2.9	3.8	5.6
			Btu/h	9,900	13,000	19,100
Power	Power Input (Nominal)	Cooling 1)	W	30	35	50
		Heating 2)	W	30	35	50
	Current Input (Nominal)	Cooling 1)	A	0.25	0.29	0.35
		Heating 2)	A	0.25	0.29	0.35
Fan	Motor	Type	-	Turbo Fan / BLDC	Turbo Fan / BLDC	Turbo Fan / BLDC
		Output	W	37	37	37
		Number of unit	EA	1	1	1
	Air Flow Rate	High / Mid / Low	CMM	9.0 / - / -	10.5 / - / -	11.2 / - / -
	External Pressure	Min / Std / Max	mmAq	-	-	-
			Pa	-	-	-
Option Code			-	087417-1400B6 -200000-300000	087417-1600D8 -200000-300000	087417-1900F9 -200000-300000
Piping Connections	Liquid Pipe		Ø,mm	6.35	6.35	6.35
			Ø, inch	1/4	1/4	1/4
	Gas Pipe		Ø,mm	9.52	9.52	12.7
			Ø, inch	3/8	3/8	1/2
	Drain Pipe		Ø,mm	ID 18 Hose	ID 18 Hose	ID 18 Hose
Refrigerant	Type		-	R410A	R410A	R410A
	Control Method		-	EEV (External)	EEV (External)	EEV (External)
Sound	Sound Pressure	High / Mid / Low	dBA	28 / 26 / 23	39 / 32 / 24	44 / 34 / 25
Dimensions	Net Weight		kg	15	15	15
	Shipping Weight		kg	19	19	19
	Net Dimensions (W×H×D)		mm	720 x 620 x 199	720 x 620 x 199	720 x 620 x 199
	Shipping Dimensions (W×H×D)		mm	810 x 710 x 295	810 x 710 x 295	810 x 710 x 295
Panel Size	Panel Model		-	-	-	-
	Panel Net Weight		kg	-	-	-
	Shipping Weight		kg	-	-	-
	Net Dimensions (W×H×D)		mm	-	-	-
	Shipping Dimensions (W×H×D)		mm	-	-	-
Additional Accessories	Drain Pump	Drain Pump	- / Model	-	-	-
		Max. lifting Height / Displacement	mm / liter/ h	-	-	-
	Air Filter		-	Long life filter	Long life filter	Long life filter

* All figures comply with EN14511

1) Nominal cooling capacities are based on;
Indoor temperature : 27°C DB, 19°C WB / Outdoor temperature : 35°C DB, Equivalent refrigerant piping : 7.5m , Level differences : 0m

2) Nominal heating capacities are based on;
Indoor temperature : 20°C DB, 15°C WB / Outdoor temperature : 7°C DB, 6°C WB, Equivalent refrigerant piping : 7.5m, Level differences : 0m

3) Sound level was acquired in an anechoic room. Thus actual noise level may be different depending on the installation conditions.

2 Combination table

2-1. AJ040FCJ2EH/EU

COOLING		Indoor Unit Combination						Cooling Capacity (W)					Capacity			Power Consumption			Current			EER	EG
		A	B	C	D	%	Total	A	B	C	D	Total	W			W			A				
													MIN	NOM	MAX	MIN	NOM	MAX	MIN	NOM	MAX		
	1 Unit	2000				50%	2000	2100				2100	1250	2100	2520	300	540	630	1.7	2.5	2.9	3.89	A
		2500				63%	2500	2500				2500	1250	2500	3120	300	750	880	1.7	3.4	4.0	3.33	A
		3500				88%	3500	3500				3500	1250	3500	4200	300	1060	1240	1.7	4.9	5.7	3.30	A
	2 Unit	2000	2000			100%	4000	2000	2000			4000	1250	4000	4500	300	1180	1330	1.7	5.4	6.1	3.39	A
		2000	2500			113%	4500	1780	2220			4000	1300	4000	4500	350	1180	1330	1.9	5.4	6.1	3.39	A
		2000	3500			138%	5500	1450	2550			4000	1300	4000	4500	350	1180	1330	1.9	5.4	6.1	3.39	A
		2500	2500			125%	5000	2000	2000			4000	1300	4000	4500	350	1180	1330	1.9	5.4	6.1	3.39	A
		2500	3500		MAX	150%	6000	1670	2330			4000	1300	4000	4500	350	1020	1330	1.9	4.7	6.1	3.92	A

* All figures comply with EN14511

1. Cooling capacity is based on 27°CDB / 19°CWB (indoor temperature), 35°CDB (outdoor temperature).
2. The above is the value for connecting with the following indoor units.
   - 2000, 2500, 3500W class: Wall Mounted Madives P Series, Maldives DELUXE [only for AQV**PSBN, AQV***PMEN, AQV***PMBN]
3. Capacities are based on the following conditions:
   - Corresponding refrigerant piping length : 5m / - Level difference : 0m
4. The total ability of connected a indoor unit is up to 6.0 kW (@ Cooling)
5. It is impossible to connect the indoor unit for one room only.
6. Power consumption include indoor unit power.

HEATING		Indoor Unit Combination						Heating Capacity (W)					Capacity			Power Consumption			Current			COP	EG
		A	B	C	D	%	Total	A	B	C	D	Total	W			W			A				
													MIN	NOM	MAX	MIN	NOM	MAX	MIN	NOM	MAX		
	1 Unit	2200				50%	2200	2400				2400	1000	2400	2990	260	780	910	1.3	3.6	4.2	3.08	D
		3300				75%	3300	3100				3100	1000	3100	3450	260	850	1080	1.3	3.9	4.9	3.65	A
		4000				91%	4000	3800				3800	1000	3800	4370	260	1100	1380	1.3	5.0	6.3	3.45	B
	2 Unit	2200	2200			100%	4400	2200	2200			4400	1000	4400	4700	280	1160	1390	1.4	5.3	6.4	3.79	A
		2200	3300			125%	5500	1760	2640			4400	1000	4400	4700	280	1160	1400	1.4	5.3	6.4	3.79	A
		2200	4000			141%	6200	1560	2840			4400	1000	4400	4700	280	1160	1400	1.4	5.3	6.4	3.79	A
		3300	3300			150%	6600	2200	2200			4400	1000	4400	4700	280	1160	1400	1.4	5.3	6.4	3.79	A
		3300	4000			166%	7300	1990	2410			4400	1000	4400	4700	280	990	1400	1.4	4.5	6.4	4.44	A

* All figures comply with EN14511

1. Heating capacity is based on 20°CDB (indoor temperature), 7°CDB/6°CWB (outdoor temperature).
2. The above is the value for connecting with the following indoor units.
   - 2200, 3300, 4000W class: Wall Mounted Madives P Series, Maldives DELUXE [only for AQV**PSBN, AQV***PMEN, AQV***PMBN]
3. Capacities are based on the following conditions:
   - Corresponding refrigerant piping length : 5m / - Level difference : 0m
4. The total ability of connected a indoor unit is up to 7.3 kW (@ Heating)
5. It is impossible to connect the indoor unit for one room only.
6. Power consumption include indoor unit power.

2-2. AJ050FCJ2EH/EU

COOLING		Indoor Unit Combination						Cooling Capacity (W)					Capacity W			Power Consumption W			Current A			EER	EG
		A	B	C	D	%	Total	A	B	C	D	Total	MIN	NOM	MAX	MIN	NOM	MAX	MIN	NOM	MAX		
	1 Unit	2000				40%	2000	2400				2400	1250	2400	2880	300	730	880	1.7	3.3	4.0	3.29	A
		2500				50%	2500	2500				2500	1250	2500	3120	300	800	960	1.7	3.7	4.4	3.13	B
		3500				70%	3500	3500				3500	1250	3500	4200	300	1090	1310	1.7	5.0	6.0	3.21	A
		5000				100%	5000	5000				5000	1250	5000	5200	300	1600	1740	1.7	7.3	8.0	3.13	B
	2 Unit	2000	2000			80%	4000	2000	2000			4000	1300	4000	4800	350	1245	1490	1.9	5.7	6.8	3.21	A
		2000	2500			90%	4500	2040	2560			4600	1300	4600	5200	350	1430	1720	1.9	6.5	7.9	3.22	A
		2000	3500			110%	5500	1820	3180			5000	1400	5000	5400	350	1490	1780	1.9	6.8	8.1	3.36	A
		2000	5000			140%	7000	1430	3570			5000	1400	5000	5400	350	1450	1800	1.9	6.6	8.2	3.45	A
		2500	2500			100%	5000	2500	2500			5000	1400	5000	5400	350	1500	1780	1.9	6.9	8.1	3.33	A
		2500	3500			120%	6000	2080	2920			5000	1400	5000	5400	350	1500	1780	1.9	6.9	8.1	3.33	A
		2500	5000			150%	7500	1670	3330			5000	1400	5000	5400	350	1450	1700	1.9	6.6	7.8	3.45	A
		3500	3500			140%	7000	2500	2500			5000	1400	5000	5400	350	1500	1780	1.9	6.9	8.1	3.33	A
		3500	5000		MAX	170%	8500	2060	2940			5000	1400	5000	5400	350	1320	1700	1.9	6.0	7.8	3.79	A

* All figures comply with EN14511

1. Cooling capacity is based on 27°CDB / 19°CWB (indoor temperature), 35°CDB (outdoor temperature).
2. The above is the value for connecting with the following indoor units.
   - 2000, 2500, 3500, 5000W class: Wall Mounted Madives P Series, Maldives DELUXE [only for AQV**PSBN, AQV***PMEN, AQV***PMBN]
3. Capacities are based on the following conditions:
   - Corresponding refrigerant piping length : 5m / - Level difference : 0m
4. The total ability of connected a indoor unit is up to 8.5 kW (@ Cooling)
5. It is impossible to connect the indoor unit for one room only.
6. Power consumption include indoor unit power.

HEATING		Indoor Unit Combination						Heating Capacity (W)					Capacity W			Power Consumption W			Current A			COP	EG
		A	B	C	D	%	Total	A	B	C	D	Total	MIN	NOM	MAX	MIN	NOM	MAX	MIN	NOM	MAX		
	1 Unit	2200				39%	2200	2500				2500	1050	2500	2990	260	880	1010	1.3	4.0	4.6	2.84	D
		3300				58%	3300	3300				3300	1050	3300	3340	260	1050	1290	1.3	4.8	5.9	3.14	D
		4000				70%	4000	4000				4000	1050	4000	4370	260	1300	1620	1.3	5.9	7.4	3.08	D
		6000				105%	6000	5400				5400	1050	5400	5600	260	1650	2060	1.3	7.6	9.4	3.27	C
	2 Unit	2200	2200			77%	4400	2200	2200			4400	1100	4400	4750	280	1220	1390	1.4	5.6	6.4	3.61	A
		2200	3300			96%	5500	2040	3060			5100	1100	5100	5460	280	1410	1610	1.4	6.5	7.4	3.62	A
		2200	4000			109%	6200	2020	3680			5700	1100	5700	6300	280	1520	1900	1.4	7.0	8.7	3.75	A
		2200	6000			144%	8200	1530	4170			5700	1100	5700	6400	280	1440	1800	1.4	6.6	8.2	3.96	A
		3300	3300			116%	6600	2850	2850			5700	1100	5700	6300	208	1550	1940	1.4	7.1	8.9	3.68	A
		3300	4000			128%	7300	2580	3120			5700	1100	5700	6300	280	1550	1850	1.4	7.1	8.5	3.68	A
		3300	6000			163%	9300	2020	3680			5700	1100	5700	6400	280	1440	1750	1.4	6.6	8.0	3.96	A
		4000	4000			140%	8000	2850	2850			5700	1100	5700	6300	280	1470	1840	1.4	6.7	8.4	3.88	A
		4000	6000			175%	10000	2280	3420			5700	1100	5700	6400	280	1350	1750	1.4	6.2	8.0	4.22	A

* All figures comply with EN14511

1. Heating capacity is based on 20°CDB (indoor temperature), 7°CDB/6°CWB (outdoor temperature).
2. The above is the value for connecting with the following indoor units.
   - 2200, 3300, 4000, 6000W class: Wall Mounted Madives P Series, Maldives DELUXE [only for AQV**PSBN, AQV***PMEN, AQV***PMBN]
3. Capacities are based on the following conditions:
   - Corresponding refrigerant piping length : 5m / - Level difference : 0m
4. The total ability of connected a indoor unit is up to 10.0 kW (@ Heating)
5. It is impossible to connect the indoor unit for one room only.
6. Power consumption include indoor unit power.

2 Combination table

2-3. AJ052FCJ3EH/EU

COOLING	Indoor Unit Combination						Cooling Capacity (W)					Capacity W			Power Consumption W			Current A			EER	EG
	A	B	C	D	%	Total	A	B	C	D	Total	MIN	NOM	MAX	MIN	NOM	MAX	MIN	NOM	MAX		
1 Unit	2000				38%	2000	2000				2000	1280	2000	2880	420	630	1020	2.2	2.9	4.7	3.17	B
	2500				48%	2500	2500				2500	1280	2500	3120	420	790	1110	2.2	3.6	5.1	3.16	B
	3500				67%	3500	3500				3500	1280	3500	4200	420	1150	1510	2.2	5.3	6.9	3.04	B
	5000				96%	5000	5000				5000	1300	5000	5800	420	1620	2090	2.2	7.4	9.6	3.09	B
2 Unit	2000	2000			77%	4000	2000	2000			4000	1300	4000	4800	440	1240	1630	2.3	5.7	7.5	3.23	A
	2000	2500			87%	4500	2040	2560			4600	1300	4600	5520	440	1410	1850	2.3	6.5	8.5	3.26	A
	2000	3500			106%	5500	1820	3180			5000	1300	5000	6290	450	1520	2000	2.3	7.0	9.2	3.29	A
	2000	5000			135%	7000	1490	3710			5200	1380	5200	6600	450	1540	2040	2.3	7.0	9.3	3.38	A
	2500	2500			96%	5000	2500	2500			5000	1300	5000	5800	440	1550	1980	2.3	7.1	9.1	3.23	A
	2500	3500			115%	6000	2080	2920			5000	1300	5000	6400	450	1510	2020	2.3	6.9	9.2	3.31	A
	2500	5000			144%	7500	1730	3470			5200	1380	5200	6800	450	1540	2070	2.3	7.0	9.5	3.38	A
	3500	3500			135%	7000	2600	2600			5200	1300	5200	6560	450	1540	2040	2.3	7.0	9.3	3.38	A
3 Unit	2000	2000	2000		115%	6000	1730	1730	1740		5200	1700	5200	6380	450	1500	2020	2.3	6.9	9.2	3.47	A
	2000	2000	2500		125%	6500	1600	1600	2000		5200	1700	5200	6490	450	1530	2040	2.3	7.0	9.3	3.40	A
	2000	2000	3500		144%	7500	1390	1390	2420		5200	1700	5200	6800	460	1420	2070	2.4	6.5	9.5	3.66	A
	2000	2500	2500		135%	7000	1480	1860	1860		5200	1700	5200	6600	450	1390	2040	2.3	6.4	9.3	3.74	A
	2000	2500	3500		154%	8000	1300	1630	2270		5200	1700	5200	6800	460	1420	2070	2.4	6.5	9.5	3.66	A
	2500	2500	2500		144%	7500	1730	1730	1740		5200	1700	5200	6800	460	1350	2070	2.4	6.2	9.5	3.85	A

* All figures comply with EN14511

1. Cooling capacity is based on 27°CDB / 19°CWB (indoor temperature), 35°CDB (outdoor temperature).
2. The above is the value for connecting with the following indoor units.
   - 2000, 2500, 3500, 5000W class: Wall Mounted Madives P Series, Maldives DELUXE [only for AQV**PSBN, AQV***PMEN, AQV***PMBN]
3. Capacities are based on the following conditions:
   - Corresponding refrigerant piping length : 5m / - Level difference : 0m
4. The total ability of connected a indoor unit is up to 8.0 kW (@ Cooling)
5. It is impossible to connect the indoor unit for one room only.
6. Power consumption include indoor unit power.

HEATING	Indoor Unit Combination						Heating Capacity (W)					Capacity W			Power Consumption W			Current A			COP	EG
	A	B	C	D	%	Total	A	B	C	D	Total	MIN	NOM	MAX	MIN	NOM	MAX	MIN	NOM	MAX		
1 Unit	2200				35%	2200	2200				2200	1300	2200	2990	350	910	1110	1.9	4.2	5.1	2.42	F
	3300				52%	3300	3300				3300	1300	3300	3340	350	1150	1270	1.9	5.3	5.8	2.87	D
	4000				63%	4000	4000				4000	1300	4000	4370	350	1350	1660	1.9	6.2	7.6	2.96	D
	6000				95%	6000	5600				5600	1350	5600	6300	350	1820	1920	1.9	8.3	8.8	3.08	D
2 Unit	2200	2200			70%	4400	2200	2200			4400	1400	4400	5060	350	1220	1510	1.9	5.6	6.9	3.61	A
	2200	3300			87%	5500	2040	3060			5100	1400	5100	5870	350	1410	1830	1.9	6.5	8.4	3.62	A
	2200	4000			98%	6200	1990	3610			5600	1400	5600	6440	350	1540	1860	1.9	7.0	8.5	3.64	A
	2200	6000			130%	8200	1610	4390			6000	1400	6000	6900	350	1660	1860	1.9	7.6	8.5	3.61	A
	3300	3300			105%	6600	2900	2900			5800	1400	5800	6300	350	1600	1910	1.9	7.3	8.7	3.63	A
	3300	4000			116%	7300	2620	3180			5800	1400	5800	6300	350	1600	1910	1.9	7.3	8.7	3.63	A
	3300	6000			148%	9300	2240	4060			6300	1400	6300	7300	350	1740	1830	1.9	8.0	8.4	3.62	A
	4000	4000			127%	8000	2950	2950			5900	1400	5900	6880	350	1630	1860	1.9	7.5	8.5	3.62	A
3 Unit	2200	2200	2200		105%	6600	1930	1930	1940		5800	1400	5800	6760	350	1590	1840	1.9	7.3	8.4	3.65	A
	2200	2200	3300		122%	7700	1690	1690	2520		5900	1400	5900	6840	350	1650	1840	1.9	7.6	8.4	3.58	B
	2200	2200	4000		133%	8400	1650	1650	3000		6300	1400	6300	7300	350	1660	1830	1.9	7.6	8.4	3.80	A
	2200	3300	3300		140%	8800	1500	2250	2250		6000	1400	6000	6920	350	1590	1840	1.9	7.3	8.4	3.77	A
	2200	3300	4000		151%	9500	1460	2190	2650		6300	1400	6300	7300	350	1630	1830	1.9	7.5	8.4	3.87	A
	3300	3300	3300		157%	9900	2100	2100	2100		6300	1400	6300	7300	350	1400	1830	1.9	6.4	8.4	4.50	A

* All figures comply with EN14511

1. Heating capacity is based on 20°CDB (indoor temperature), 7°CDB/6°CWB (outdoor temperature).
2. The above is the value for connecting with the following indoor units.
   - 2200, 3300, 4000, 6000W class: Wall Mounted Madives P Series, Maldives DELUXE [only for AQV**PSBN, AQV***PMEN, AQV***PMBN]
3. Capacities are based on the following conditions:
   - Corresponding refrigerant piping length : 5m / - Level difference : 0m
4. The total ability of connected a indoor unit is up to 9.9 kW (@ Heating)
5. It is impossible to connect the indoor unit for one room only.
6. Power consumption include indoor unit power.

2-4. AJ068FCJ3EH/EU

COOLING	Indoor Unit Combination						Cooling Capacity (W)					Capacity W			Power Consumption W			Current A			EER	EG
	A	B	C	D	%	Total	A	B	C	D	Total	MIN	NOM	MAX	MIN	NOM	MAX	MIN	NOM	MAX		
1 Unit	2000				34%	2000	2000				2000	1280	2000	2880	400	630	930	2.2	2.9	4.3	3.17	B
	2500				42%	2500	2500				2500	1280	2500	3120	400	790	1010	2.2	3.6	4.6	3.16	B
	3500				59%	3500	3500				3500	1280	3500	4200	400	1070	1370	2.2	4.9	6.3	3.27	A
	5000				85%	5000	5000				5000	1300	5000	5800	400	1620	1900	2.2	7.4	8.7	3.09	B
2 Unit	2000	2000			68%	4000	2000	2000			4000	1300	4000	4800	420	1240	1480	2.3	5.7	6.8	3.23	A
	2000	2500			76%	4500	2040	2560			4600	1300	4600	5520	420	1410	1680	2.3	6.5	7.7	3.26	A
	2000	3500			93%	5500	1910	3340			5250	1300	5250	6290	430	1550	1820	2.3	7.1	8.3	3.39	A
	2000	5000			119%	7000	1570	3930			5500	1380	5500	6600	430	1580	1850	2.3	7.2	8.5	3.48	A
	2500	2500			85%	5000	2600	2600			5200	1300	5200	5800	420	1620	1800	2.3	7.4	8.2	3.21	A
	2500	3500			102%	6000	2210	3090			5300	1300	5300	6400	430	1550	1840	2.3	7.1	8.4	3.42	A
	2500	5000			127%	7500	1970	3930			5900	1380	5900	6800	430	1700	1880	2.3	7.8	8.6	3.47	A
	3500	3500			119%	7000	2725	2725			5450	1300	5450	6560	430	1570	1850	2.3	7.2	8.5	3.47	A
	3500	5000			144%	8500	2430	3470			5900	1380	5900	6800	440	1700	1880	2.4	7.8	8.6	3.47	A
3 Unit	2000	2000	2000		102%	6000	1760	1760	1760		5280	1700	5280	6380	430	1550	1840	2.3	7.1	8.4	3.41	A
	2000	2000	2500		110%	6500	1660	1660	2080		5400	1700	5400	6490	430	1560	1850	2.3	7.1	8.5	3.46	A
	2000	2000	3500		127%	7500	1580	1580	2740		5900	1700	5900	6800	440	1610	1880	2.4	7.4	8.6	3.66	A
	2000	2500	2500		119%	7000	1580	1960	1960		5500	1700	5500	6600	430	1580	1850	2.3	7.2	8.5	3.48	A
	2000	2500	3500		136%	8000	1480	1840	2580		5900	1700	5900	6800	440	1610	1880	2.4	7.4	8.6	3.66	A
	2000	3500	3500		153%	9000	1320	2290	2290		5900	1700	5900	6800	440	1610	1880	2.4	7.4	8.6	3.66	A
	2500	2500	2500		127%	7500	1960	1970	1970		5900	1700	5900	6800	440	1600	1880	2.4	7.3	8.6	3.69	A
	2500	2500	3500		144%	8500	1740	1740	2420		5900	1700	5900	6800	440	1600	1880	2.4	7.3	8.6	3.69	A

* All figures comply with EN14511

1. Cooling capacity is based on 27°CDB / 19°CWB (indoor temperature), 35°CDB (outdoor temperature).
2. The above is the value for connecting with the following indoor units.
   - 2000, 2500, 3500, 5000W class: Wall Mounted Madives P Series, Maldives DELUXE [only for AQV**PSBN, AQV***PMEN, AQV***PMBN]
3. Capacities are based on the following conditions:
   - Corresponding refrigerant piping length : 5m / - Level difference : 0m
4. The total ability of connected a indoor unit is up to 9.0 kW (@ Cooling)
5. It is impossible to connect the indoor unit for one room only.
6. Power consumption include indoor unit power.

HEATING	Indoor Unit Combination						Heating Capacity (W)					Capacity W			Power Consumption W			Current A			COP	EG
	A	B	C	D	%	Total	A	B	C	D	Total	MIN	NOM	MAX	MIN	NOM	MAX	MIN	NOM	MAX		
1 Unit	2200				35%	2200	2200				2200	1300	2200	2990	350	880	1190	1.9	4.0	5.4	2.50	F
	3300				52%	3300	3300				3300	1300	3300	3340	350	1150	1360	1.9	5.3	6.2	2.87	D
	4000				63%	4000	4000				4000	1300	4000	4370	350	1350	1780	1.9	6.2	8.1	2.96	D
	6000				95%	6000	5600				5600	1350	5600	6300	350	1820	2050	1.9	8.3	9.4	3.08	D
2 Unit	2200	2200			70%	4400	2200	2200			4400	1400	4400	5060	350	1220	1620	1.9	5.6	7.4	3.61	A
	2200	3300			87%	5500	2040	3060			5100	1400	5100	5870	350	1490	1960	1.9	6.8	9.0	3.42	B
	2200	4000			98%	6200	1990	3610			5600	1400	5600	6440	350	1640	1990	1.9	7.5	9.1	3.41	B
	2200	6000			130%	8200	1610	4390			6000	1400	6000	6900	350	1660	1990	1.9	7.6	9.1	3.61	A
	3300	3300			105%	6600	2900	2900			5800	1400	5800	6300	350	1700	2040	1.9	7.8	9.3	3.41	B
	3300	4000			116%	7300	2620	3180			5800	1400	5800	6300	350	1700	2040	1.9	7.8	9.3	3.41	B
	3300	6000			148%	9300	2240	4060			6300	1400	6300	7300	350	1740	1960	1.9	8.0	9.0	3.62	A
	4000	4000			127%	8000	2950	2950			5900	1400	5900	6880	350	1730	1990	1.9	7.9	9.1	3.41	B
	4000	6000			159%	10000	2520	3780			6300	1400	6300	7300	350	1740	1960	1.9	8.0	9.0	3.62	A
3 Unit	2200	2200	2200		105%	6600	1930	1930	1940		5800	1400	5800	6760	350	1590	1970	1.9	7.3	9.0	3.65	A
	2200	2200	3300		122%	7700	1690	1690	2520		5900	1400	5900	6840	350	1610	1970	1.9	7.4	9.0	3.66	A
	2200	2200	4000		133%	8400	1650	1650	3000		6300	1400	6300	7300	350	1660	1960	1.9	7.6	9.0	3.80	A
	2200	3300	3300		140%	8800	1500	2250	2250		6000	1400	6000	6920	350	1590	1970	1.9	7.3	9.0	3.77	A
	2200	3300	4000		151%	9500	1460	2190	2650		6300	1400	6300	7300	350	1630	1960	1.9	7.5	9.0	3.87	A
	2200	4000	4000		162%	10200	1360	2470	2470		6300	1400	6300	7300	350	1560	1960	1.9	7.1	9.0	4.04	A
	3300	3300	3300		157%	9900	2100	2100	2100		6300	1400	6300	7300	350	1650	1960	1.9	7.6	9.0	3.82	A
	3300	3300	4000		168%	10600	1960	1960	2380		6300	1400	6300	7300	350	1400	1960	1.9	6.4	9.0	4.50	A

* All figures comply with EN14511

1. Heating capacity is based on 20°CDB (indoor temperature), 7°CDB/6°CWB (outdoor temperature).
2. The above is the value for connecting with the following indoor units.
   - 2200, 3300, 4000, 6000W class: Wall Mounted Madives P Series, Maldives DELUXE [only for AQV**PSBN, AQV***PMEN, AQV***PMBN]
3. Capacities are based on the following conditions:
   - Corresponding refrigerant piping length : 5m / - Level difference : 0m
4. The total ability of connected a indoor unit is up to 10.6 kW (@ Heating)
5. It is impossible to connect the indoor unit for one room only.
6. Power consumption include indoor unit power.

2 Combination table

2-5. AJ070FCJ4EH/EU

COOLING		Indoor Unit Combination						Cooling Capacity (W)					Capacity W			Power Consumption W			Current A			EER	EG
		A	B	C	D	%	Total	A	B	C	D	Total	MIN	NOM	MAX	MIN	NOM	MAX	MIN	NOM	MAX		
	1 Unit	2000				29%	2000	2200				2200	1350	2200	3000	380	780	950	1.7	3.6	4.3	2.82	C
		2500				36%	2500	2500				2500	1350	2500	3480	390	840	1100	1.8	3.8	5.0	2.98	C
		3500				50%	3500	3500				3500	1350	3500	4200	400	1130	1580	1.8	5.2	7.2	3.10	B
		5000				71%	5000	4900				4900	1400	4900	6240	420	1520	2160	1.9	7.0	9.9	3.22	A
	2 Unit	2000	2000			57%	4000	2000	2000			4000	1500	4000	4800	410	1240	1490	1.9	5.7	6.8	3.23	A
		2000	2500			64%	4500	2040	2560			4600	1690	4600	5520	420	1430	1720	1.9	6.5	7.9	3.22	A
		2000	3500			79%	5500	2000	3500			5500	1770	5500	6600	430	1710	2050	2	7.8	9.4	3.22	A
		2000	5000			100%	7000	2000	5000			7000	1900	7000	8400	580	2180	2520	2.7	10.0	11.5	3.21	A
		2500	2500			71%	5000	2600	2600			5200	1750	5200	6240	420	1660	2000	1.9	7.6	9.2	3.13	B
		2500	3500			86%	6000	2540	3560			6100	1820	6100	7320	440	1880	2260	2	8.6	10.3	3.24	A
		2500	5000			107%	7500	2330	4670			7000	1900	7000	8400	580	2180	2540	2.7	10.0	11.6	3.21	A
		3500	3500			100%	7000	3500	3500			7000	1900	7000	8000	580	2490	2620	2.7	11.4	12.0	2.81	C
		3500	5000			121%	8500	2880	4120			7000	1900	7000	8900	580	2110	2540	2.7	9.7	11.6	3.32	A
		5000	5000			143%	10000	3500	3500			7000	1900	7000	8900	580	2000	2540	2.7	9.2	11.6	3.50	A
	3 Unit	2000	2000	2000		86%	6000	2000	2000	2000		6000	1810	6000	7200	440	1800	2280	2	8.2	10.4	3.33	A
		2000	2000	2500		93%	6500	2030	2030	2540		6600	1870	6600	7920	440	1830	2460	2	8.4	11.3	3.61	A
		2000	2000	3500		107%	7500	1780	1780	3120		6680	1900	6680	8020	580	1835	2410	2.7	8.4	11.0	3.64	A
		2000	2000	5000		129%	9000	1560	1560	3880		7000	1900	7000	8900	580	1850	2460	2.7	8.5	11.3	3.78	A
		2000	2500	2500		100%	7000	1910	2370	2370		6650	1900	6650	7980	580	1830	2410	2.7	8.4	11.0	3.63	A
		2000	2500	3500		114%	8000	1690	2110	2940		6740	1900	6740	8080	580	1840	2460	2.7	8.4	11.3	3.66	A
		2000	2500	5000		136%	9500	1480	1840	3680		7000	1900	7000	8900	580	1880	2460	2.7	8.6	11.3	3.72	A
		2000	3500	3500		129%	9000	1520	2650	2650		6820	1900	6820	8180	580	1850	2510	2.7	8.5	11.5	3.69	A
		2000	3500	5000		150%	10500	1340	2330	3330		7000	1900	7000	8900	580	1930	2510	2.7	8.8	11.5	3.63	A
		2500	2500	2500		107%	7500	2240	2240	2240		6720	1900	6720	8050	580	1840	2420	2.7	8.4	11.1	3.65	A
		2500	2500	3500		121%	8500	2000	2000	2790		6790	1900	6790	8150	580	1850	2460	2.7	8.5	11.3	3.67	A
		2500	2500	5000		143%	10000	1750	1750	3500		7000	1900	7000	8900	580	1880	2510	2.7	8.6	11.5	3.72	A
		2500	3500	3500		136%	9500	1840	2580	2580		7000	1900	7000	8900	580	1880	2460	2.7	8.6	11.3	3.72	A
		3500	3500	3500		150%	10500	2330	2330	2330		6990	1900	6990	8900	580	1900	2510	2.7	8.7	11.5	3.68	A
	4 Unit	2000	2000	2000	2000	114%	8000	1680	1680	1680	1680	6720	1900	6720	8070	580	1850	2460	2.7	8.5	11.3	3.63	A
		2000	2000	2000	2500	121%	8500	1600	1600	1600	1980	6780	1900	6780	8140	580	1880	2460	2.7	8.6	11.3	3.61	A
		2000	2000	2000	3500	136%	9500	1470	1470	1470	2590	7000	1900	7000	8900	580	1900	2460	2.7	8.7	11.3	3.68	A
		2000	2000	2500	2500	129%	9000	1560	1560	1940	1940	7000	1900	7000	8900	580	1880	2460	2.7	8.6	11.3	3.72	A
		2000	2000	2500	3500	143%	10000	1400	1400	1750	2450	7000	1900	7000	8900	580	1900	2510	2.7	8.7	11.5	3.68	A
		2000	2500	2500	2500	136%	9500	1480	1840	1840	1840	7000	1900	7000	8900	580	1900	2460	2.7	8.7	11.3	3.68	A
		2000	2500	2500	3500	150%	10500	1330	1670	1670	2330	7000	1900	7000	8900	580	1930	2550	2.7	8.8	11.7	3.63	A
		2500	2500	2500	2500	143%	10000	1750	1750	1750	1750	7000	1900	7000	8900	580	1900	2550	2.7	8.7	11.7	3.68	A

* All figures comply with EN14511

1. Cooling capacity is based on 27°CDB / 19°CWB (indoor temperature), 35°CDB (outdoor temperature).
2. The above is the value for connecting with the following indoor units.
   - 2000, 2500, 3500, 5000W class: Wall Mounted Madives P Series, Maldives DELUXE [only for AQV**PSBN, AQV***PMEN, AQV***PMBN]
3. Capacities are based on the following conditions:
   - Corresponding refrigerant piping length : 7.5m / - Level difference : 0m
4. The total ability of connected a indoor unit is up to 10.5 kW (@ Cooling)
5. It is impossible to connect the indoor unit for one room only.
6. Power consumption include indoor unit power.

HEATING		Indoor Unit Combination						Heating Capacity (W)					Capacity			Power Consumption			Current			COP	EG
		A	B	C	D	%	Total	A	B	C	D	Total	W			W			A				
													MIN	NOM	MAX	MIN	NOM	MAX	MIN	NOM	MAX		
	1 Unit	2200				26%	2200	2200				2200	1790	2200	3220	580	950	1330	2.7	4.3	6.1	2.32	G
		3300				38%	3300	3300				3300	1820	3300	3680	590	1150	1500	2.7	5.3	6.9	2.87	D
		4000				47%	4000	4000				4000	1930	4000	4600	600	1300	1810	2.7	5.9	8.3	3.08	D
		6000				70%	6000	6000				6000	2080	6000	6440	610	1750	2370	2.8	8.0	10.8	3.43	B
	2 Unit	2200	2200			51%	4400	2200	2200			4400	1980	4400	5060	600	1220	1530	2.7	5.6	7.0	3.61	A
		2200	3300			64%	5500	2040	3060			5100	2040	5100	5870	610	1410	1700	2.8	6.5	7.8	3.62	A
		2200	4000			72%	6200	2130	3870			6000	2110	6000	6900	610	1760	2110	2.8	8.1	9.7	3.41	B
		2200	6000			95%	8200	2090	5710			7800	2200	7800	9130	620	2160	2700	2.8	9.9	12.4	3.61	A
		3300	3300			77%	6600	2900	2900			5800	2100	5800	6670	610	1600	1930	2.8	7.3	8.8	3.63	A
		3300	4000			85%	7300	3030	3670			6700	2170	6700	8040	610	1940	2330	2.8	8.9	10.7	3.45	B
		3300	6000			108%	9300	2770	5030			7800	2200	7800	9600	620	2160	2650	2.8	9.9	12.1	3.61	A
		4000	4000			93%	8000	3800	3800			7600	2200	7600	9120	620	2180	2510	2.8	10.0	11.5	3.49	B
		4000	6000			116%	10000	3250	4870			8120	2200	8120	9740	620	2250	2700	2.8	10.3	12.4	3.61	A
		6000	6000			140%	12000	4250	4250			8500	2200	8500	10200	620	2250	2740	2.8	10.3	12.5	3.78	A
	3 Unit	2200	2200	2200		77%	6600	2200	2200	2200		6600	2170	6600	7590	610	1830	2530	2.8	8.4	11.6	3.61	A
		2200	2200	3300		90%	7700	2090	2090	3120		7300	2200	7300	8400	620	1880	2590	2.8	8.6	11.9	3.88	A
		2200	2200	4000		98%	8400	2150	2150	3900		8200	2200	8200	9590	620	1930	2660	2.8	8.8	12.2	4.25	A
		2200	2200	6000		121%	10400	1820	1820	4960		8600	2200	8600	10300	620	1960	2700	2.8	9.0	12.4	4.39	A
		2200	3300	3300		102%	8800	2000	3000	3000		8000	2200	8000	9360	620	1900	2620	2.8	8.7	12.0	4.21	A
		2200	3300	4000		110%	9500	1910	2870	3480		8260	2200	8260	9670	620	1930	2660	2.8	8.8	12.2	4.28	A
		2200	3300	6000		134%	11500	1650	2470	4480		8600	2200	8600	10300	620	1970	2720	2.8	9.0	12.4	4.37	A
		2200	4000	4000		119%	10200	1800	3270	3270		8340	2200	8340	9760	620	1950	2690	2.8	8.9	12.3	4.28	A
		2200	4000	6000		142%	12200	1550	2820	4230		8600	2200	8600	10300	620	2000	2760	2.8	9.2	12.6	4.30	A
		3300	3300	3300		115%	9900	2750	2750	2750		8250	2200	8250	9650	620	1930	2660	2.8	8.8	12.2	4.27	A
		3300	3300	4000		123%	10600	2600	2600	3130		8330	2200	8330	9740	620	1950	2690	2.8	8.9	12.3	4.27	A
		3300	3300	6000		147%	12600	2250	2250	4100		8600	2200	8600	10300	620	1980	2730	2.8	9.1	12.5	4.34	A
		3300	4000	4000		131%	11300	2520	3040	3040		8600	2200	8600	10300	620	1980	2730	2.8	9.1	12.5	4.34	A
		4000	4000	4000		140%	12000	2860	2870	2870		8600	2200	8600	10300	620	2000	2760	2.8	9.2	12.6	4.30	A
	4 Unit	2200	2200	2200	2200	102%	8800	2060	2060	2060	2070	8250	2200	8250	9660	620	1930	2660	2.8	8.8	12.2	4.27	A
		2200	2200	2200	3300	115%	9900	1850	1850	1850	2770	8320	2200	8320	9730	620	1950	2690	2.8	8.9	12.3	4.27	A
		2200	2200	2200	4000	123%	10600	1790	1790	1790	3230	8600	2200	8600	10300	620	2000	2760	2.8	9.2	12.6	4.30	A
		2200	2200	3300	3300	128%	11000	1720	1720	2580	2580	8600	2200	8600	10300	620	1970	2720	2.8	9.0	12.4	4.37	A
		2200	2200	3300	4000	136%	11700	1620	1620	2430	2930	8600	2200	8600	10300	620	2000	2760	2.8	9.2	12.6	4.30	A
		2200	3300	3300	3300	141%	12100	1550	2350	2350	2350	8600	2200	8600	10300	620	2000	2760	2.8	9.2	12.6	4.30	A
		2200	3300	3300	4000	149%	12800	1480	2220	2220	2680	8600	2200	8600	10300	620	2000	2760	2.8	9.2	12.6	4.30	A
		3300	3300	3300	3300	153%	13200	2150	2150	2150	2150	8600	2200	8600	10300	620	2000	2760	2.8	9.2	12.6	4.30	A

* All figures comply with EN14511

1. Heating capacity is based on 20°CDB (indoor temperature), 7°CDB/6°CWB (outdoor temperature).
2. The above is the value for connecting with the following indoor units.
   - 2200, 3300, 4000, 6000W class: Wall Mounted Madives P Series, Maldives DELUXE [only for AQV**PSBN, AQV***PMEN, AQV***PMBN]
3. Capacities are based on the following conditions:
   - Corresponding refrigerant piping length : 7.5m / - Level difference : 0m
4. The total ability of connected a indoor unit is up to 13.2 kW (@ Heating)
5. It is impossible to connect the indoor unit for one room only.
6. Power consumption include indoor unit power.

2 Combination table

2-6. AJ080FCJ4EH/EU

COOLING

	Indoor Unit Combination						Cooling Capacity (W)					Capacity W			Power Consumption W			Current A			EER	EG
	A	B	C	D	%	Total	A	B	C	D	Total	MIN	NOM	MAX	MIN	NOM	MAX	MIN	NOM	MAX		
1 Unit	2000				25%	2000	2200				2200	1470	2200	3000	380	780	950	1.7	3.6	4.3	2.82	C
	2500				31%	2500	2500				2500	1520	2500	3480	390	840	1100	1.8	3.8	5.0	2.98	C
	3500				44%	3500	3500				3500	1600	3500	4200	400	1130	1580	1.8	5.2	7.2	3.10	B
	5000				63%	5000	4900				4900	1750	4900	6240	420	1520	2160	1.9	7.0	9.9	3.22	A
	6800				85%	6800	6000				6000	1900	6000	8000	580	1990	2800	2.7	9.1	12.8	3.02	B
2 Unit	2000	2000			50%	4000	2000	2000			4000	1640	4000	4800	410	1240	1490	1.9	5.7	6.8	3.23	A
	2000	2500			56%	4500	2040	2560			4600	1690	4600	5520	420	1430	1720	1.9	6.5	7.9	3.22	A
	2000	3500			69%	5500	2000	3500			5500	1770	5500	6600	430	1710	2050	2	7.8	9.4	3.22	A
	2000	5000			88%	7000	2060	5140			7200	1900	7200	8640	580	2240	2690	2.7	10.3	12.3	3.21	A
	2000	6800			110%	8800	1690	5760			7450	1900	7450	8640	580	2350	2730	2.7	10.8	12.5	3.17	B
	2500	2500			63%	5000	2600	2600			5200	1750	5200	6240	420	1660	2000	1.9	7.6	9.2	3.13	B
	2500	3500			75%	6000	2540	3560			6100	1820	6100	7320	440	1900	2260	2	8.7	10.3	3.21	A
	2500	5000			94%	7500	2400	4800			7200	1900	7200	8640	580	2240	2690	2.7	10.3	12.3	3.21	A
	2500	6800			116%	9300	2030	5520			7550	1900	7550	8760	580	2380	2760	2.7	10.9	12.6	3.17	B
	3500	3500			88%	7000	3500	3500			7000	1900	7000	8000	580	2490	2620	2.7	11.4	12.0	2.81	C
	3500	5000			106%	8500	3030	4320			7350	1900	7350	8820	580	2290	2750	2.7	10.5	12.6	3.21	A
	3500	6800			129%	10300	2620	5080			7700	1900	7700	8930	580	2400	2780	2.7	11.0	12.7	3.21	A
	5000	5000			125%	10000	3830	3830			7660	1900	7660	9180	580	2380	2860	2.7	10.9	13.1	3.22	A
	5000	6800			148%	11800	3310	4490			7800	1900	7800	8970	580	2430	2820	2.7	11.1	12.9	3.21	A
3 Unit	2000	2000	2000		75%	6000	2000	2000	2000		6000	1810	6000	7200	440	1850	2310	2	8.5	10.6	3.24	A
	2000	2000	2500		81%	6500	2030	2030	2540		6600	1870	6600	7920	440	2000	2500	2	9.2	11.4	3.30	A
	2000	2000	3500		94%	7500	2000	2000	3500		7500	1900	7500	9000	580	2220	2780	2.7	10.2	12.7	3.38	A
	2000	2000	5000		113%	9000	1700	1700	4250		7650	1900	7650	9180	580	2190	2730	2.7	10.0	12.5	3.49	A
	2000	2000	6800		135%	10800	1480	1480	5040		8000	1900	8000	9300	580	2270	2870	2.7	10.4	13.1	3.52	A
	2000	2500	2500		88%	7000	2060	2570	2570		7200	1900	7200	8640	580	2150	2680	2.7	9.8	12.3	3.35	A
	2000	2500	3500		100%	8000	1890	2360	3300		7550	1900	7550	9060	580	2150	2690	2.7	9.8	12.3	3.51	A
	2000	2500	5000		119%	9500	1620	2030	4060		7710	1900	7710	9250	580	2190	2730	2.7	10.0	12.5	3.52	A
	2000	2500	6800		141%	11300	1420	1770	4810		8000	1900	8000	9300	580	2270	2870	2.7	10.4	13.1	3.52	A
	2000	3500	3500		113%	9000	1700	2970	2970		7640	1900	7640	9160	580	2190	2730	2.7	10.0	12.5	3.49	A
	2000	3500	5000		131%	10500	1520	2670	3810		8000	1900	8000	9300	580	2260	2820	2.7	10.3	12.9	3.54	A
	2000	5000	5000		150%	12000	1340	3330	3330		8000	1900	8000	9300	580	2300	2910	2.7	10.5	13.3	3.48	A
	2500	2500	2500		94%	7500	2510	2510	2510		7530	1900	7530	9030	580	2110	2640	2.7	9.7	12.1	3.57	A
	2500	2500	3500		106%	8500	2240	2240	3130		7610	1900	7610	9130	580	2140	2690	2.7	9.8	12.3	3.56	A
	2500	2500	5000		125%	10000	1940	1940	3880		7760	1900	7760	9300	580	2210	2780	2.7	10.1	12.7	3.51	A
	2500	2500	6800		148%	11800	1690	1690	4620		8000	1900	8000	9300	580	2300	2910	2.7	10.5	13.3	3.48	A
	2500	3500	3500		119%	9500	2030	2830	2830		7690	1900	7690	9230	580	2180	2730	2.7	10.0	12.5	3.53	A
	2500	3500	5000		138%	11000	1820	2550	3630		8000	1900	8000	9300	580	2260	2870	2.7	10.3	13.1	3.54	A
	3500	3500	3500		131%	10500	2670	2670	2660		8000	1900	8000	9300	580	2260	2820	2.7	10.3	12.9	3.54	A
	3500	3500	5000		150%	12000	2340	2340	3320		8000	1900	8000	9300	580	2300	2910	2.7	10.5	13.3	3.48	A
4 Unit	2000	2000	2000	2000	100%	8000	1890	1890	1890	1890	7560	1900	7560	9050	580	2140	2690	2.7	9.8	12.3	3.53	A
	2000	2000	2000	2500	106%	8500	1790	1790	1790	2230	7600	1900	7600	9120	580	2140	2690	2.7	9.8	12.3	3.55	A
	2000	2000	2000	3500	119%	9500	1620	1620	1620	2820	7680	1900	7680	9220	580	2180	2730	2.7	10.0	12.5	3.52	A
	2000	2000	2000	5000	138%	11000	1450	1450	1450	3650	8000	1900	8000	9300	580	2300	2870	2.7	10.5	13.1	3.48	A
	2000	2000	2500	2500	113%	9000	1700	1700	2130	2130	7660	1900	7660	9180	580	2190	2730	2.7	10.0	12.5	3.50	A
	2000	2000	2500	3500	125%	10000	1550	1550	1930	2700	7730	1900	7730	9280	580	2200	2780	2.7	10.1	12.7	3.51	A
	2000	2000	2500	5000	144%	11500	1390	1390	1740	3480	8000	1900	8000	9300	580	2300	2870	2.7	10.5	13.1	3.48	A
	2000	2000	3500	3500	138%	11000	1450	1450	2550	2550	8000	1900	8000	9300	580	2280	2870	2.7	10.4	13.1	3.51	A
	2000	2500	2500	2500	119%	9500	1620	2030	2030	2030	7710	1900	7710	9250	580	2190	2730	2.7	10.0	12.5	3.52	A
	2000	2500	2500	3500	131%	10500	1530	1900	1900	2670	8000	1900	8000	9300	580	2260	2820	2.7	10.3	12.9	3.54	A
	2000	2500	2500	5000	150%	12000	1330	1670	1670	3330	8000	1900	8000	9300	580	2300	2910	2.7	10.5	13.3	3.48	A
	2000	2500	3500	3500	144%	11500	1400	1740	2430	2430	8000	1900	8000	9300	580	2300	2870	2.7	10.5	13.1	3.48	A
	2500	2500	2500	2500	125%	10000	1940	1940	1940	1940	7760	1900	7760	9300	580	2220	2780	2.7	10.2	12.7	3.50	A
	2500	2500	2500	3500	138%	11000	1820	1820	1820	2540	8000	1900	8000	9300	580	2300	2870	2.7	10.5	13.1	3.48	A
	2500	2500	3500	3500	150%	12000	1670	1670	2330	2330	8000	1900	8000	9300	580	2300	2910	2.7	10.5	13.3	3.48	A

* All figures comply with EN14511

1. Cooling capacity is based on 27°CDB / 19°CWB (indoor temperature), 35°CDB (outdoor temperature).
2. The above is the value for connecting with the following indoor units.
   - 2000, 2500, 3500, 5000, 6800W class: Wall Mounted Madives P Series, Maldives DELUXE [only for AQV**PSBN, AQV***PMEN, AQV***PMBN]
3. Capacities are based on the following conditions:
   - Corresponding refrigerant piping length : 7.5m / - Level difference : 0m
4. The total ability of connected a indoor unit is up to 12.0 kW (@ Cooling)
5. It is impossible to connect the indoor unit for one room only.
6. Power consumption include indoor unit power.

HEATING

	Indoor unit combination						Heating Capacity (W)					Capacity W			Power Consumption W			Current A			COP	EG
	A	B	C	D	%	Total	A	B	C	D	Total	MIN	NOM	MAX	MIN	NOM	MAX	MIN	NOM	MAX		
1 Unit	2200				24%	2200	2200				2200	1790	2200	3220	580	950	1330	2.7	4.3	6.1	2.32	G
	3300				35%	3300	3300				3300	1820	3300	3680	590	1150	1500	2.7	5.3	6.9	2.87	D
	4000				43%	4000	4000				4000	1930	4000	4600	600	1300	1810	2.7	5.9	8.3	3.08	D
	6000				65%	6000	6000				6000	2080	6000	6440	610	1750	2370	2.8	8.0	10.8	3.43	B
	7800				84%	7800	7800				7800	2200	7800	8450	620	2250	2550	2.8	10.3	11.7	3.47	B
2 Unit	2200	2200			47%	4400	2200	2200			4400	1980	4400	5060	600	1220	1530	2.7	5.6	7.0	3.61	A
	2200	3300			59%	5500	2040	3060			5100	2040	5100	5870	610	1410	1700	2.8	6.5	7.8	3.62	A
	2200	4000			67%	6200	2130	3870			6000	2110	6000	6900	610	1760	2110	2.8	8.1	9.7	3.41	B
	2200	6000			88%	8200	2090	5710			7800	2200	7800	9130	620	2160	2580	2.8	9.9	11.8	3.61	A
	2200	7800			108%	10000	1790	6330			8120	2200	8120	9300	620	2250	2600	2.8	10.3	11.9	3.61	A
	3300	3300			71%	6600	2900	2900			5800	2100	5800	6670	610	1600	1930	2.8	7.3	8.8	3.63	A
	3300	4000			78%	7300	3030	3670			6700	2170	6700	7710	610	1940	2330	2.8	8.9	10.7	3.45	B
	3300	6000			100%	9300	2770	5030			7800	2200	7800	9360	620	2160	2600	2.8	9.9	11.9	3.61	A
	3300	7800			119%	11100	2480	5870			8350	2200	8350	9600	620	2340	2700	2.8	10.7	12.4	3.57	B
	4000	4000			86%	8000	3800	3800			7600	2200	7600	8740	620	2180	2510	2.8	10.0	11.5	3.49	B
	4000	6000			108%	10000	3250	4870			8120	2200	8120	9500	620	2250	2650	2.8	10.3	12.1	3.61	A
	4000	7800			127%	11800	2860	5590			8450	2200	8450	9700	620	2380	2700	2.8	10.9	12.4	3.55	B
	6000	6000			129%	12000	4250	4250			8500	2200	8500	9950	620	2340	2750	2.8	10.7	12.6	3.63	A
	6000	7800			148%	13800	3760	4890			8650	2200	8650	9900	620	2420	2800	2.8	11.1	12.8	3.57	B
3 Unit	2200	2200	2200		71%	6600	2200	2200	2200		6600	2170	6600	7590	610	1830	2220	2.8	8.4	10.2	3.61	A
	2200	2200	3300		83%	7700	2090	2090	3120		7300	2200	7300	8400	620	1950	2340	2.8	8.9	10.7	3.74	A
	2200	2200	4000		90%	8400	2150	2150	3900		8200	2200	8200	9590	620	2150	2570	2.8	9.8	11.8	3.81	A
	2200	2200	6000		112%	10400	1830	1830	4960		8620	2200	8620	10090	620	2140	2610	2.8	9.8	11.9	4.03	A
	2200	2200	7800		131%	12200	1580	1580	5590		8750	2200	8750	10500	620	2150	2750	2.8	9.8	12.6	4.07	A
	2200	3300	3300		95%	8800	2000	3000	3000		8000	2200	8000	9360	620	2080	2500	2.8	9.5	11.4	3.85	A
	2200	3300	4000		102%	9500	1980	2960	3590		8530	2200	8530	9980	620	2100	2690	2.8	9.6	12.3	4.06	A
	2200	3300	6000		124%	11500	1660	2490	4530		8680	2200	8680	10150	620	2140	2740	2.8	9.8	12.5	4.06	A
	2200	3300	7800		143%	13300	1540	2310	5450		9300	2200	9300	10900	620	2250	2820	2.8	10.3	12.9	4.13	A
	2200	4000	4000		110%	10200	1860	3370	3370		8600	2200	8600	10070	620	2140	2740	2.8	9.8	12.5	4.02	A
	2200	4000	6000		131%	12200	1580	2870	4300		8750	2200	8750	10500	620	2150	2750	2.8	9.8	12.6	4.07	A
	2200	6000	6000		153%	14200	1440	3930	3930		9300	2200	9300	10900	620	2250	2820	2.8	10.3	12.9	4.13	A
	3300	3300	3300		106%	9900	2840	2840	2840		8520	2200	8520	9960	620	2090	2680	2.8	9.6	12.3	4.08	A
	3300	3300	4000		114%	10600	2680	2680	3230		8590	2200	8590	10050	620	2100	2690	2.8	9.6	12.3	4.09	A
	3300	3300	6000		135%	12600	2290	2290	4170		8750	2200	8750	10500	620	2140	2740	2.8	9.8	12.5	4.09	A
	3300	3300	7800		155%	14400	2130	2130	5040		9300	2200	9300	10900	620	2250	2820	2.8	10.3	12.9	4.13	A
	3300	4000	4000		122%	11300	2540	3060	3060		8660	2200	8660	10130	620	2140	2740	2.8	9.8	12.5	4.05	A
	3300	4000	6000		143%	13300	2310	2800	4190		9300	2200	9300	10500	620	2150	2750	2.8	9.8	12.6	4.33	A
	4000	4000	4000		129%	12000	2910	2910	2910		8730	2200	8730	10220	620	2150	2750	2.8	9.8	12.6	4.06	A
	4000	4000	6000		151%	14000	2660	2660	3980		9300	2200	9300	10900	620	2180	2790	2.8	10.0	12.8	4.27	A
4 Unit	2200	2200	2200	2200	95%	8800	2130	2130	2130	2130	8520	2200	8520	9970	620	2100	2690	2.8	9.6	12.3	4.06	A
	2200	2200	2200	3300	106%	9900	1910	1910	1910	2850	8580	2200	8580	10040	620	2100	2690	2.8	9.6	12.3	4.09	A
	2200	2200	2200	4000	114%	10600	1800	1800	1800	3250	8650	2200	8650	10120	620	2140	2740	2.8	9.8	12.5	4.04	A
	2200	2200	2200	6000	135%	12600	1630	1630	1630	4410	9300	2200	9300	10900	620	2200	2820	2.8	10.1	12.9	4.23	A
	2200	2200	3300	3300	118%	11000	1730	1730	2590	2590	8640	2200	8640	10100	620	2140	2740	2.8	9.8	12.5	4.04	A
	2200	2200	3300	4000	126%	11700	1640	1640	2460	2970	8710	2200	8710	10190	620	2140	2740	2.8	9.8	12.5	4.07	A
	2200	2200	3300	6000	147%	13700	1490	1490	2240	4080	9300	2200	9300	10900	620	2200	2820	2.8	10.1	12.9	4.23	A
	2200	2200	4000	4000	133%	12400	1560	1560	2830	2830	8780	2200	8780	10270	620	2180	2790	2.8	10.0	12.8	4.03	A
	2200	3300	3300	3300	130%	12100	1580	2370	2370	2370	8690	2200	8690	10170	620	2140	2740	2.8	9.8	12.5	4.06	A
	2200	3300	3300	4000	138%	12800	1500	2260	2260	2740	8760	2200	8760	10250	620	2180	2790	2.8	10.0	12.8	4.02	A
	2200	3300	3300	5000	148%	13800	1490	2220	2220	3370	9300	2200	9300	10900	620	2250	2820	2.8	10.3	12.9	4.13	A
	2200	3300	4000	4000	145%	13500	1530	2270	2750	2750	9300	2200	9300	10900	620	2200	2820	2.8	10.1	12.9	4.23	A
	3300	3300	3300	3300	142%	13200	2185	2190	2185	2190	8750	2200	8750	10240	620	2140	2740	2.8	9.8	12.5	4.09	A
	3300	3300	3300	4000	149%	13900	2210	2210	2210	2670	9300	2200	9300	10900	620	2180	2790	2.8	10.0	12.8	4.27	A
	3300	3300	4000	4000	157%	14600	2100	2100	2550	2550	9300	2200	9300	10900	620	2200	2820	2.8	10.1	12.9	4.23	A

* All figures comply with EN14511

1. Heating capacity is based on 20°CDB (indoor temperature), 7°CDB/6°CWB (outdoor temperature).
2. The above is the value for connecting with the following indoor units.
   - 2200, 3300, 4000, 6000, 7800W class: Wall Mounted Madives P Series, Maldives DELUXE [only for AQV**PSBN, AQV***PMEN, AQV***PMBN]
3. Capacities are based on the following conditions:
   - Corresponding refrigerant piping length : 7.5m / - Level difference : 0m
4. The total ability of connected a indoor unit is up to 14.6 kW (@ Heating)
5. It is impossible to connect the indoor unit for one room only.
6. Power consumption include indoor unit power.

2 Combination table

2-7. AJ100FCJ5EH/EU

COOLING

	Indoor Unit Combination							Cooling Capacity (W)						Capacity W			Power Consumption W			Current A			EER	EG
	A	B	C	D	E	%	Total	A	B	C	D	E	Total	MIN	NOM	MAX	MIN	NOM	MAX	MIN	NOM	MAX		
1 Unit	2000					20%	2000	2000					2000	1600	2000	3000	580	700	1010	2.7	3.2	4.6	2.86	C
	2500					25%	2500	2500					2500	1600	2500	3630	580	800	1210	2.7	3.7	5.5	3.13	B
	3500					35%	3500	3500					3500	1620	3500	4740	590	1070	1580	2.7	4.9	7.2	3.27	A
	5000					50%	5000	5000					5000	1650	5000	6480	600	1500	2160	2.7	6.9	9.9	3.33	A
	6800					68%	6800	6800					6800	1710	6800	8690	620	2180	2900	2.8	10.0	13.3	3.12	B
2 Unit	2000	2000				40%	4000	2000	2000				4000	1680	4000	4900	610	1260	1650	2.8	5.8	7.6	3.17	B
	2000	2500				45%	4500	2000	2500				4500	1680	4500	5530	610	1400	1860	2.8	6.4	8.5	3.21	A
	2000	3500				55%	5500	2000	3500				5500	1710	5500	6950	620	1750	2330	2.8	8.0	10.7	3.14	B
	2000	5000				70%	7000	2000	5000				7000	2210	7000	8690	630	2190	2910	2.9	10.0	13.3	3.20	B
	2000	6800				88%	8800	1830	6240				8070	2280	8070	10110	650	2550	3390	3	11.7	15.5	3.16	B
	2500	2500				50%	5000	2500	2500				5000	1680	5000	6320	610	1600	2120	2.8	7.3	9.7	3.13	B
	2500	3500				60%	6000	2500	3500				6000	1710	6000	7270	620	1840	2430	2.8	8.4	11.1	3.26	A
	2500	5000				75%	7500	2500	5000				7500	2210	7500	9320	630	2340	3120	2.9	10.7	14.3	3.21	A
	2500	6800				93%	9300	2190	5960				8150	2280	8150	10110	650	2550	3390	3	11.7	15.5	3.20	B
	3500	3500				70%	7000	3500	3500				7000	2170	7000	8530	620	2130	2850	2.8	9.7	13.0	3.29	A
	3500	5000				85%	8500	3300	4720				8020	2240	8020	9950	640	2490	3330	2.9	11.4	15.2	3.22	A
	3500	6800				103%	10300	2920	5670				8590	2480	8590	10740	660	2700	3600	3	12.4	16.5	3.18	B
	5000	5000				100%	10000	4280	4280				8560	2440	8560	10430	650	2650	3500	3	12.1	16.0	3.23	A
	5000	6800				118%	11800	3740	5080				8820	2510	8820	10900	670	2760	3670	3.1	12.6	16.8	3.20	B
	6800	6800				136%	13600	4550	4550				9100	3110	9100	11000	690	2830	3740	3.2	13.0	17.1	3.22	A
3 Unit	2000	2000	2000			60%	6000	2000	2000	2000			6000	1760	6000	7270	640	1870	2460	2.9	8.6	11.3	3.21	A
	2000	2000	2500			65%	6500	2000	2000	2500			6500	1760	6500	7900	640	2010	2660	2.9	9.2	12.2	3.23	A
	2000	2000	3500			75%	7500	2000	2000	3500			7500	2280	7500	8850	650	2260	2980	3	10.3	13.6	3.32	A
	2000	2000	5000			90%	9000	1930	1930	4830			8690	2310	8690	10270	660	2610	3450	3	11.9	15.8	3.33	A
	2000	2000	6800			108%	10800	1660	1660	5650			8970	2550	8970	10430	680	2680	3530	3.1	12.3	16.2	3.35	A
	2000	2500	2500			70%	7000	2000	2500	2500			7000	2240	7000	8370	640	2110	2820	2.9	9.7	12.9	3.32	A
	2000	2500	3500			80%	8000	2000	2500	3500			8000	2280	8000	9320	650	2350	3130	3	10.8	14.3	3.40	A
	2000	2500	5000			95%	9500	1850	2310	4620			8780	2310	8780	10270	660	2610	3450	3	11.9	15.8	3.36	A
	2000	2500	6800			113%	11300	1550	1940	5270			8760	2550	8760	10430	680	2680	3530	3.1	12.3	16.2	3.27	A
	2000	3500	3500			90%	9000	1930	3380	3380			8690	2280	8690	10270	650	2600	3440	3	11.9	15.7	3.34	A
	2000	3500	5000			105%	10500	1700	2980	4250			8930	2510	8930	10430	670	2660	3510	3.1	12.2	16.1	3.36	A
	2000	3500	6800			123%	12300	1460	2550	4950			8960	2760	8960	10740	690	2730	3630	3.2	12.5	16.6	3.28	A
	2000	5000	5000			120%	12000	1480	3710	3710			8900	2720	8900	10740	680	2720	3630	3.1	12.4	16.6	3.27	A
	2000	5000	6800			138%	13800	1340	3360	4560			9260	3150	9260	11000	700	2840	3750	3.2	13.0	17.2	3.26	A
	2000	6800	6800			156%	15600	1260	4270	4270			9800	3240	9800	11000	720	2860	3770	3.3	13.1	17.3	3.43	A
	2500	2500	2500			75%	7500	2500	2500	2500			7500	2240	7500	8850	640	2250	2970	2.9	10.3	13.6	3.33	A
	2500	2500	3500			85%	8500	2500	2500	3500			8500	2280	8500	9950	650	2500	3340	3	11.4	15.3	3.40	A
	2500	2500	5000			100%	10000	2210	2210	4430			8850	2480	8850	10270	660	2610	3450	3	11.9	15.8	3.39	A
	2500	2500	6800			118%	11800	1880	1880	5110			8870	2550	8870	10740	680	2720	3630	3.1	12.4	16.6	3.26	A
	2500	3500	3500			95%	9500	2310	3230	3230			8770	2280	8770	10270	650	2600	3440	3	11.9	15.7	3.37	A
	2500	3500	5000			110%	11000	1980	2770	3950			8700	2510	8700	10430	670	2660	3510	3.1	12.2	16.1	3.27	A
	2500	3500	6800			128%	12800	1770	2480	4810			9060	2760	9060	10900	690	2780	3690	3.2	12.7	16.9	3.26	A
	2500	5000	5000			125%	12500	1800	3600	3600			9000	2720	9000	10900	680	2770	3680	3.1	12.7	16.8	3.25	A
	2500	5000	6800			143%	14300	1640	3270	4450			9360	3150	9360	11000	700	2740	3750	3.2	12.5	17.2	3.42	A
	2500	6800	6800			161%	16100	1520	4140	4140			9800	3240	9800	11000	720	2860	3770	3.3	13.1	17.3	3.43	A
	3500	3500	3500			105%	10500	2980	2980	2980			8940	2480	8940	10430	660	2650	3500	3	12.1	16.0	3.37	A
	3500	3500	5000			120%	12000	2600	2600	3710			8910	2680	8910	10740	670	2710	3620	3.1	12.4	16.6	3.29	A
	3500	3500	6800			138%	13800	2350	2350	4560			9260	3110	9260	11000	690	2830	3740	3.2	13.0	17.1	3.27	A
	3500	5000	5000			135%	13500	2390	3410	3410			9210	3110	9210	11000	690	2820	3740	3.2	12.9	17.1	3.27	A
	3500	5000	6800			153%	15300	2240	3200	4360			9800	3200	9800	11000	710	2800	3760	3.2	12.8	17.2	3.50	A
	3500	6800	6800			171%	17100	2000	3900	3900			9800	3290	9800	11000	730	2910	3780	3.3	13.3	17.3	3.37	A
	5000	5000	5000			150%	15000	3260	3270	3270			9800	3150	9800	11000	700	2790	3750	3.2	12.8	17.2	3.51	A
	5000	5000	6800			168%	16800	2920	2920	3960			9800	3240	9800	11000	720	2910	3770	3.3	13.3	17.3	3.37	A
4 Unit	2000	2000	2000	2000		80%	8000	2000	2000	2000	2000		8000	2350	8000	9320	670	2380	3160	3.1	10.9	14.5	3.36	A
	2000	2000	2000	2500		85%	8500	2000	2000	2000	2500		8500	2350	8500	9950	670	2520	3360	3.1	11.5	15.4	3.37	A
	2000	2000	2000	3500		95%	9500	1850	1850	1850	3230		8780	2380	8780	10270	680	2620	3470	3.1	12.0	15.9	3.35	A
	2000	2000	2000	5000		110%	11000	1580	1580	1580	3950		8690	2590	8690	10430	690	2690	3540	3.2	12.3	16.2	3.23	A
	2000	2000	2000	6800		128%	12800	1420	1420	1420	4820		9080	2840	9080	10900	710	2800	3710	3.2	12.8	17.0	3.24	A
	2000	2000	2500	2500		90%	9000	1930	1930	2420	2420		8700	2350	8700	10270	670	2620	3460	3.1	12.0	15.8	3.32	A
	2000	2000	2500	3500		100%	10000	1770	1770	2210	3100		8850	2550	8850	10270	680	2620	3470	3.1	12.0	15.9	3.38	A
	2000	2000	2500	5000		115%	11500	1530	1530	1910	3830		8800	2590	8800	10740	690	2730	3640	3.2	12.5	16.7	3.22	A
	2000	2000	2500	6800		133%	13300	1380	1380	1720	4680		9160	3200	9160	10900	710	2800	3710	3.2	12.8	17.0	3.27	A
	2000	2000	3500	3500		110%	11000	1580	1580	2770	2770		8700	2550	8700	10430	680	2680	3530	3.1	12.3	16.2	3.25	A
	2000	2000	3500	5000		125%	12500	1440	1440	2520	3600		9000	2800	9000	10900	700	2790	3700	3.2	12.8	16.9	3.23	A
	2000	2000	3500	6800		143%	14300	1310	1310	2290	4450		9360	3240	9360	11000	720	2760	3770	3.3	12.6	17.3	3.39	A
	2000	2000	5000	5000		140%	14000	1330	1330	3320	3320		9300	3200	9300	11000	710	2850	3760	3.2	13.0	17.2	3.26	A
	2000	2000	5000	6800		158%	15800	1240	1240	3100	4220		9800	3290	9800	11000	730	2870	3780	3.3	13.1	17.3	3.41	A
	2000	2500	2500	2500		95%	9500	1850	2310	2310	2310		8780	2350	8780	10270	670	2620	3460	3.1	12.0	15.8	3.35	A
	2000	2500	2500	3500		105%	10500	1700	2130	2130	2980		8940	2550	8940	10430	680	2670	3520	3.1	12.2	16.1	3.35	A
	2000	2500	2500	5000		120%	12000	1480	1850	1850	3700		8880	2760	8880	10740	690	2730	3640	3.2	12.5	16.7	3.25	A
	2000	2500	2500	6800		138%	13800	1340	1680	1680	4560		9260	3200	9260	11000	710	2850	3760	3.2	13.0	17.2	3.25	A
	2000	2500	3500	3500		115%	11500	1530	1910	2680	2680		8800	2550	8800	10740	680	2720	3630	3.1	12.4	16.6	3.24	A
	2000	2500	3500	5000		130%	13000	1400	1750	2450	3500		9100	3150	9100	10900	700	2790	3700	3.2	12.8	16.9	3.26	A

COOLING

	Indoor Unit Combination							Cooling Capacity (W)						Capacity W			Power Consumption W			Current A			EER	EG
	A	B	C	D	E	%	Total	A	B	C	D	E	Total	MIN	NOM	MAX	MIN	NOM	MAX	MIN	NOM	MAX		
4 Unit	2000	2500	3500	6800		148%	14800	1280	1600	2240	4350		9470	3240	9470	11000	720	2810	3770	3.3	12.9	17.3	3.37	A
	2000	2500	5000	5000		145%	14500	1300	1620	3240	3240		9400	3200	9400	11000	710	2800	3760	3.2	12.8	17.2	3.36	A
	2000	2500	5000	6800		163%	16300	1200	1500	3010	4090		9800	3290	9800	11000	730	2870	3780	3.3	13.1	17.3	3.41	A
	2000	3500	3500	3500		125%	12500	1440	2520	2520	2520		9000	2760	9000	10900	690	2780	3690	3.2	12.7	16.9	3.24	A
	2000	3500	3500	5000		140%	14000	1330	2330	2330	3330		9320	3150	9320	11000	700	2840	3750	3.2	13.0	17.2	3.28	A
	2000	3500	3500	6800		158%	15800	1240	2170	2170	4220		9800	3240	9800	11000	720	2860	3770	3.3	13.1	17.3	3.43	A
	2000	3500	5000	5000		155%	15500	1270	2210	3160	3160		9800	3240	9800	11000	720	2850	3770	3.3	13.0	17.3	3.44	A
	2000	3500	5000	6800		173%	17300	1140	1980	2830	3850		9800	3330	9800	11000	740	2920	3790	3.4	13.4	17.3	3.36	A
	2000	5000	5000	5000		170%	17000	1160	2880	2880	2880		9800	3290	9800	11000	730	2920	3780	3.3	13.4	17.3	3.36	A
	2500	2500	2500	2500		100%	10000	2210	2210	2210	2210		8840	2510	8840	10270	670	2620	3460	3.1	12.0	15.8	3.37	A
	2500	2500	2500	3500		110%	11000	1980	1980	1980	2770		8710	2550	8710	10430	680	2670	3520	3.1	12.2	16.1	3.26	A
	2500	2500	2500	5000		125%	12500	1800	1800	1800	3600		9000	2760	9000	10900	690	2780	3690	3.2	12.7	16.9	3.24	A
	2500	2500	2500	6800		143%	14300	1640	1640	1640	4460		9380	3200	9380	11000	710	2750	3760	3.2	12.6	17.2	3.41	A
	2500	2500	3500	3500		120%	12000	1850	1850	2600	2600		8900	2720	8900	10740	680	2720	3630	3.1	12.4	16.6	3.27	A
	2500	2500	3500	5000		135%	13500	1700	1700	2390	3410		9200	3150	9200	11000	700	2830	3750	3.2	13.0	17.2	3.25	A
	2500	2500	3500	6800		153%	15300	1600	1600	2240	4360		9800	3240	9800	11000	720	2810	3770	3.3	12.9	17.3	3.49	A
	2500	2500	5000	5000		150%	15000	1630	1630	3270	3270		9800	3200	9800	11000	710	2800	3760	3.2	12.8	17.2	3.50	A
	2500	2500	5000	6800		168%	16800	1460	1460	2920	3960		9800	3290	9800	11000	730	2920	3780	3.3	13.4	17.3	3.36	A
	2500	3500	3500	3500		130%	13000	1750	2450	2450	2450		9100	3110	9100	10900	690	2780	3690	3.2	12.7	16.9	3.27	A
	2500	3500	3500	5000		145%	14500	1620	2270	2270	3240		9400	3150	9400	11000	700	2790	3750	3.2	12.8	17.2	3.37	A
	2500	3500	3500	6800		163%	16300	1510	2100	2100	4090		9800	3240	9800	11000	720	2860	3770	3.3	13.1	17.3	3.43	A
	2500	3500	5000	5000		160%	16000	1540	2140	3060	3060		9800	3240	9800	11000	720	2850	3770	3.3	13.0	17.3	3.44	A
	3500	3500	3500	3500		140%	14000	2330	2330	2330	2330		9320	3110	9320	11000	690	2830	3740	3.2	13.0	17.1	3.29	A
	3500	3500	3500	5000		155%	15500	2210	2210	2210	3170		9800	3200	9800	11000	710	2840	3760	3.2	13.0	17.2	3.45	A
	3500	3500	3500	6800		173%	17300	1980	1980	1980	3860		9800	3290	9800	11000	730	2910	3780	3.3	13.3	17.3	3.37	A
	3500	3500	5000	5000		170%	17000	2020	2020	2880	2880		9800	3240	9800	11000	720	2910	3770	3.3	13.3	17.3	3.37	A
5 Unit	2000	2000	2000	2000	2000	100%	10000	1900	1900	1900	1900	1900	9500	2630	9500	10270	700	2650	3490	3.2	12.1	16.0	3.58	A
	2000	2000	2000	2000	2500	105%	10500	1820	1820	1820	1820	2270	9550	2630	9550	10430	700	2700	3550	3.2	12.4	16.2	3.54	A
	2000	2000	2000	2000	3500	115%	11500	1680	1680	1680	1680	2940	9660	2660	9660	10740	710	2750	3650	3.2	12.6	16.7	3.51	A
	2000	2000	2000	2000	5000	130%	13000	1540	1540	1540	1540	3840	10000	3240	10000	10900	720	2810	3720	3.3	12.9	17.0	3.56	A
	2000	2000	2000	2000	6800	148%	14800	1350	1350	1350	1350	4600	10000	3330	10000	11000	740	2830	3790	3.4	13.0	17.3	3.53	A
	2000	2000	2000	2500	2500	110%	11000	1750	1750	1750	2180	2180	9610	2630	9610	10430	700	2700	3550	3.2	12.4	16.2	3.56	A
	2000	2000	2000	2500	3500	120%	12000	1620	1620	1620	2020	2830	9710	2840	9710	10740	710	2750	3650	3.2	12.6	16.7	3.53	A
	2000	2000	2000	2500	5000	135%	13500	1480	1480	1480	1860	3700	10000	3240	10000	11000	720	2860	3770	3.3	13.1	17.3	3.50	A
	2000	2000	2000	2500	6800	153%	15300	1310	1310	1310	1630	4440	10000	3330	10000	11000	740	2830	3790	3.4	13.0	17.3	3.53	A
	2000	2000	2000	3500	3500	130%	13000	1540	1540	1540	2690	2690	10000	3200	10000	10900	710	2800	3710	3.2	12.8	17.0	3.57	A
	2000	2000	2000	3500	5000	145%	14500	1380	1380	1380	2410	3450	10000	3290	10000	11000	730	2820	3780	3.3	12.9	17.3	3.55	A
	2000	2000	2000	3500	6800	163%	16300	1230	1230	1230	2150	4160	10000	3380	10000	11000	750	2880	3800	3.4	13.2	17.4	3.47	A
	2000	2000	2000	5000	5000	160%	16000	1240	1240	1240	3140	3140	10000	3330	10000	11000	740	2880	3790	3.4	13.2	17.3	3.47	A
	2000	2000	2500	2500	2500	115%	11500	1680	1680	2100	2100	2100	9660	2630	9660	10740	700	2740	3650	3.2	12.5	16.7	3.53	A
	2000	2000	2500	2500	3500	125%	12500	1600	1600	2000	2000	2800	10000	2840	10000	10900	710	2800	3710	3.2	12.8	17.0	3.57	A
	2000	2000	2500	2500	5000	140%	14000	1430	1430	1790	1790	3560	10000	3240	10000	11000	720	2860	3770	3.3	13.1	17.3	3.50	A
	2000	2000	2500	2500	6800	158%	15800	1270	1270	1580	1580	4300	10000	3330	10000	11000	740	2880	3790	3.4	13.2	17.3	3.47	A
	2000	2000	2500	3500	3500	135%	13500	1480	1480	1860	2590	2590	10000	3200	10000	11000	710	2850	3760	3.2	13.0	17.2	3.51	A
	2000	2000	2500	3500	5000	150%	15000	1330	1330	1680	2330	3330	10000	3290	10000	11000	730	2820	3780	3.3	12.9	17.3	3.55	A
	2000	2000	2500	3500	6800	168%	16800	1190	1190	1490	2080	4050	10000	3380	10000	11000	750	2930	3800	3.4	13.4	17.4	3.41	A
	2000	2000	2500	5000	5000	165%	16500	1210	1210	1520	3030	3030	10000	3330	10000	11000	740	2930	3790	3.4	13.4	17.3	3.41	A
	2000	2000	3500	3500	3500	145%	14500	1370	1370	2420	2420	2420	10000	3240	10000	11000	720	2810	3770	3.3	12.9	17.3	3.56	A
	2000	2000	3500	3500	5000	160%	16000	1250	1250	2190	2190	3120	10000	3290	10000	11000	730	2870	3780	3.3	13.1	17.3	3.48	A
	2000	2500	2500	2500	2500	120%	12000	1620	2020	2020	2020	2020	9700	2800	9700	10740	700	2740	3650	3.2	12.5	16.7	3.54	A
	2000	2500	2500	2500	3500	130%	13000	1550	1920	1920	1920	2690	10000	3200	10000	10900	710	2800	3710	3.2	12.8	17.0	3.57	A
	2000	2500	2500	2500	5000	145%	14500	1390	1720	1720	1720	3450	10000	3240	10000	11000	720	2810	3770	3.3	12.9	17.3	3.56	A
	2000	2500	2500	2500	6800	163%	16300	1240	1530	1530	1530	4170	10000	3330	10000	11000	740	2880	3790	3.4	13.2	17.3	3.47	A
	2000	2500	2500	3500	3500	140%	14000	1440	1790	1790	2490	2490	10000	3200	10000	11000	710	2850	3760	3.2	13.0	17.2	3.51	A
	2000	2500	2500	3500	5000	155%	15500	1290	1610	1610	2260	3230	10000	3290	10000	11000	730	2860	3780	3.3	13.1	17.3	3.50	A
	2000	2500	2500	3500	6800	173%	17300	1160	1450	1450	2020	3920	10000	3380	10000	11000	750	2930	3800	3.4	13.4	17.4	3.41	A
	2000	2500	2500	5000	5000	170%	17000	1180	1470	1470	2940	2940	10000	3330	10000	11000	740	2930	3790	3.4	13.4	17.3	3.41	A
	2000	2500	3500	3500	3500	150%	15000	1340	1670	2330	2330	2330	10000	3240	10000	11000	720	2810	3770	3.3	12.9	17.3	3.56	A
	2000	2500	3500	3500	5000	165%	16500	1210	1520	2120	2120	3030	10000	3290	10000	11000	730	2920	3780	3.3	13.4	17.3	3.42	A
	2000	3500	3500	3500	3500	160%	16000	1240	2190	2190	2190	2190	10000	3240	10000	11000	720	2860	3770	3.3	13.1	17.3	3.50	A
	2500	2500	2500	2500	2500	125%	12500	2000	2000	2000	2000	2000	10000	3000	10000	11000	700	2900	3700	3.2	13.3	16.9	3.45	A
	2500	2500	2500	2500	3500	135%	13500	1850	1850	1850	1850	2600	10000	3200	10000	11000	710	2840	3760	3.2	13.0	17.2	3.52	A
	2500	2500	2500	2500	5000	150%	15000	1670	1670	1670	1670	3320	10000	3240	10000	11000	720	2810	3770	3.3	12.9	17.3	3.56	A
	2500	2500	2500	2500	6800	168%	16800	1490	1490	1490	1490	4040	10000	3330	10000	11000	740	2930	3790	3.4	13.4	17.3	3.41	A
	2500	2500	2500	3500	3500	145%	14500	1720	1720	1720	2420	2420	10000	3200	10000	11000	710	2800	3760	3.2	12.8	17.2	3.57	A
	2500	2500	2500	3500	5000	160%	16000	1560	1560	1560	2190	3130	10000	3290	10000	11000	730	2860	3780	3.3	13.1	17.3	3.50	A
	2500	2500	3500	3500	3500	155%	15500	1610	1610	2260	2260	2260	10000	3240	10000	11000	720	2850	3770	3.3	13.0	17.3	3.51	A
	2500	2500	3500	3500	5000	170%	17000	1470	1470	2060	2060	2940	10000	3290	10000	11000	730	2920	3780	3.3	13.4	17.3	3.42	A
	2500	3500	3500	3500	3500	165%	16500	1520	2120	2120	2120	2120	10000	3240	10000	11000	720	2910	3770	3.3	13.3	17.3	3.44	A

* All figures comply with EN14511

1. Cooling capacity is based on 27°CDB / 19°CWB (indoor temperature), 35°CDB (outdoor temperature).
2. The above is the value for connecting with the following indoor units.
   - 2000, 2500, 3500, 5000, 6800W class: Wall Mounted Madives P Series, Maldives DELUXE [only for AQV**PSBN, AQV***PMEN, AQV***PMBN]
3. Capacities are based on the following conditions:
   - Corresponding refrigerant piping length : 5m / - Level difference : 0m
4. The total ability of connected a indoor unit is up to 17.0 kW (@ Cooling)
5. It is impossible to connect the indoor unit for one room only.
6. Power consumption include indoor unit power.

2 Combination table

2-7. AJ100FCJ5EH/EU

HEATING		Indoor Unit Combination							Heating Capacity (W)						Capacity W			Power Consumption W			Current A			COP	EG
		A	B	C	D	E	%	Total	A	B	C	D	E	Total	MIN	NOM	MAX	MIN	NOM	MAX	MIN	NOM	MAX		
	1 Unit	2200					18%	2200	2200					2200	1160	2200	3160	430	900	1080	2	4.1	4.9	2.44	F
		3300					28%	3300	3200					3200	1160	3200	4270	430	1070	1284	2	4.9	5.9	2.99	D
		4000					33%	4000	4000					4000	1190	4000	5210	440	1280	1536	2	5.9	7.0	3.13	D
		6000					50%	6000	6000					6000	1220	6000	7430	450	1800	2160	2.1	8.2	9.9	3.33	C
		7800					65%	7800	7800					7800	1270	7800	9640	470	2350	2820	2.2	10.8	12.9	3.32	C
	2 Unit	2200	2200				37%	4400	2200	2200				4400	1240	4400	5530	460	1250	1520	2.1	5.7	7.0	3.52	B
		2200	3300				46%	5500	2200	3300				5500	1240	5500	6790	460	1520	1850	2.1	7.0	8.5	3.62	A
		2200	4000				52%	6200	2200	4000				6200	1270	6200	7580	470	1700	2060	2.2	7.8	9.4	3.65	A
		2200	6000				68%	8200	2200	6000				8200	1300	8200	10110	480	2240	2750	2.2	10.3	12.6	3.66	A
		2200	7800				83%	10000	2200	7800				10000	1500	10000	12480	500	2790	3390	2.3	12.8	15.5	3.58	B
		3300	3300				55%	6600	3300	3300				6600	1240	6600	8220	460	1820	2230	2.1	8.3	10.2	3.63	A
		3300	4000				61%	7300	3300	4000				7300	1270	7300	9010	470	2010	2440	2.2	9.2	11.2	3.63	A
		3300	6000				78%	9300	3300	6000				9300	1300	9300	11690	480	2590	3160	2.2	11.9	14.5	3.59	B
		3300	7800				93%	11100	3150	7450				10600	1500	10600	13110	500	2920	3560	2.3	13.4	16.3	3.63	A
		4000	4000				67%	8000	4000	4000				8000	1270	8000	9800	470	2190	2650	2.2	10.0	12.1	3.65	A
		4000	6000				83%	10000	4000	6000				10000	1470	10000	12320	490	2730	3330	2.2	12.5	15.2	3.66	A
		4000	7800				98%	11800	3590	7010				10600	1530	10600	13110	510	2930	3560	2.3	13.4	16.3	3.62	A
		6000	6000				100%	12000	5300	5300				10600	1650	10600	13110	500	2920	3560	2.3	13.4	16.3	3.63	A
		6000	7800				115%	13800	4610	5990				10600	1820	10600	13110	520	2940	3580	2.4	13.5	16.4	3.61	A
		7800	7800				130%	15600	5300	5300				10600	2160	10600	12960	540	2920	3560	2.5	13.4	16.3	3.63	A
	3 Unit	2200	2200	2200			55%	6600	2200	2200	2200			6600	1320	6600	7580	490	1720	2090	2.2	7.9	9.6	3.84	A
		2200	2200	3300			64%	7700	2200	2200	3300			7700	1320	7700	9010	490	2030	2460	2.2	9.3	11.3	3.79	A
		2200	2200	4000			70%	8400	2200	2200	4000			8400	1350	8400	9800	500	2210	2680	2.3	10.1	12.3	3.80	A
		2200	2200	6000			87%	10400	2050	2050	5590			9690	1530	9690	12170	510	2710	3320	2.3	12.4	15.2	3.58	B
		2200	2200	7800			102%	12200	1780	1780	6300			9860	1750	9860	12170	530	2730	3340	2.4	12.5	15.3	3.61	A
		2200	3300	3300			73%	8800	2200	3300	3300			8800	1320	8800	10740	490	2380	2920	2.2	10.9	13.4	3.70	A
		2200	3300	4000			79%	9500	2200	3300	4000			9500	1350	9500	11380	500	2520	3090	2.3	11.5	14.1	3.77	A
		2200	3300	6000			96%	11500	1870	2810	5110			9790	1530	9790	11850	510	2670	3230	2.3	12.2	14.8	3.67	A
		2200	3300	7800			111%	13300	1650	2470	5850			9970	1860	9970	12170	530	2730	3340	2.4	12.5	15.3	3.65	A
		2200	4000	4000			85%	10200	2090	3790	3790			9670	1500	9670	12170	500	2700	3310	2.3	12.4	15.1	3.58	B
		2200	4000	6000			102%	12200	1780	3230	4850			9860	1720	9860	12170	520	2720	3320	2.4	12.4	15.2	3.63	A
		2200	4000	7800			117%	14000	1580	2870	5590			10040	1890	10040	12320	540	2780	3380	2.5	12.7	15.5	3.61	A
		2200	6000	6000			118%	14200	1560	4250	4250			10060	1860	10060	12320	530	2780	3380	2.4	12.7	15.5	3.62	A
		2200	6000	7800			133%	16000	1490	4050	5270			10810	2200	10810	12800	550	2880	3520	2.5	13.2	16.1	3.75	A
		2200	7800	7800			148%	17800	1360	4820	4820			11000	2280	11000	12960	570	2950	3590	2.6	13.5	16.4	3.73	A
		3300	3300	3300			83%	9900	3210	3210	3210			9630	1470	9630	11850	490	2650	3210	2.2	12.1	14.7	3.63	A
		3300	3300	4000			88%	10600	3020	3020	3660			9700	1500	9700	11530	500	2560	3140	2.3	11.7	14.4	3.79	A
		3300	3300	6000			105%	12600	2590	2590	4710			9890	1680	9890	12320	510	2760	3360	2.3	12.6	15.4	3.58	B
		3300	3300	7800			120%	14400	2440	2440	5770			10650	1860	10650	12480	530	2820	3420	2.4	12.9	15.7	3.78	A
		3300	4000	4000			94%	11300	2850	3460	3460			9770	1500	9770	11850	500	2660	3220	2.3	12.2	14.7	3.67	A
		3300	4000	6000			111%	13300	2470	3000	4500			9970	1820	9970	12170	520	2720	3320	2.4	12.4	15.2	3.67	A
		3300	4000	7800			126%	15100	2340	2840	5540			10720	1890	10720	12480	540	2830	3430	2.5	13.0	15.7	3.79	A
		3300	6000	6000			128%	15300	2320	4210	4210			10740	1860	10740	12480	530	2820	3420	2.4	12.9	15.7	3.81	A
		3300	6000	7800			143%	17100	2120	3860	5020			11000	2200	11000	12960	550	2930	3570	2.5	13.4	16.3	3.75	A
		3300	7800	7800			158%	18900	1920	4540	4540			11000	2280	11000	13110	570	2990	3630	2.6	13.7	16.6	3.68	A
		4000	4000	4000			100%	12000	3280	3280	3280			9840	1680	9840	12170	510	2710	3310	2.3	12.4	15.1	3.63	A
		4000	4000	6000			117%	14000	2870	2870	4300			10040	1820	10040	12320	520	2770	3370	2.4	12.7	15.4	3.62	A
		4000	4000	7800			132%	15800	2730	2730	5330			10790	2160	10790	12800	540	2870	3510	2.5	13.1	16.1	3.76	A
		4000	6000	6000			133%	16000	2700	4050	4050			10800	2160	10800	12800	540	2870	3510	2.5	13.1	16.1	3.76	A
		4000	6000	7800			148%	17800	2470	3710	4820			11000	2240	11000	12960	560	2930	3570	2.6	13.4	16.3	3.75	A
		4000	7800	7800			163%	19600	2240	4380	4380			11000	2320	11000	13430	580	3040	3720	2.7	13.9	17.0	3.62	A
		6000	6000	6000			150%	18000	3660	3670	3670			11000	2200	11000	12960	550	2930	3570	2.5	13.4	16.3	3.75	A
		6000	6000	7800			165%	19800	3330	3330	4340			11000	2280	11000	13430	570	3040	3710	2.6	13.9	17.0	3.62	A
	4 Unit	2200	2200	2200	2200		73%	8800	2200	2200	2200	2200		8800	1400	8800	9800	520	2240	2700	2.4	10.3	12.4	3.93	A
		2200	2200	2200	3300		83%	9900	2140	2140	2140	3210		9630	1560	9630	11380	520	2550	3120	2.4	11.7	14.3	3.78	A
		2200	2200	2200	4000		88%	10600	2010	2010	2010	3660		9690	1590	9690	12170	530	2730	3330	2.4	12.5	15.2	3.55	B
		2200	2200	2200	6000		105%	12600	1730	1730	1730	4710		9900	1780	9900	12170	540	2740	3350	2.5	12.5	15.3	3.61	A
		2200	2200	2200	7800		120%	14400	1630	1630	1630	5770		10660	1960	10660	12320	560	2810	3410	2.6	12.9	15.6	3.79	A
		2200	2200	3300	3300		92%	11000	1950	1950	2920	2920		9740	1560	9740	11530	520	2590	3160	2.4	11.9	14.5	3.76	A
		2200	2200	3300	4000		98%	11700	1840	1840	2760	3350		9790	1590	9790	11850	530	2680	3250	2.4	12.3	14.9	3.65	A
		2200	2200	3300	6000		114%	13700	1610	1610	2410	4380		10010	1890	10010	12170	540	2740	3350	2.5	12.5	15.3	3.65	A
		2200	2200	3300	7800		129%	15500	1530	1530	2290	5410		10760	1960	10760	12480	560	2850	3450	2.6	13.0	15.8	3.78	A
		2200	2200	4000	4000		103%	12400	1750	1750	3190	3190		9880	1750	9880	12170	530	2730	3340	2.4	12.5	15.3	3.62	A
		2200	2200	4000	6000		120%	14400	1630	1630	2960	4440		10660	1930	10660	12320	550	2790	3390	2.5	12.8	15.5	3.82	A
		2200	2200	4000	7800		135%	16200	1470	1470	2670	5210		10820	2280	10820	12800	570	2900	3540	2.6	13.3	16.2	3.73	A
		2200	2200	6000	6000		137%	16400	1460	1460	3970	3970		10860	2240	10860	12800	560	2890	3530	2.6	13.2	16.2	3.76	A
		2200	2200	6000	7800		152%	18200	1330	1330	3630	4710		11000	2320	11000	12960	580	2960	3600	2.7	13.5	16.5	3.72	A
		2200	3300	3300	3300		101%	12100	1790	2690	2690	2690		9860	1720	9860	12170	520	2720	3330	2.4	12.4	15.2	3.63	A
		2200	3300	3300	4000		107%	12800	1710	2560	2560	3100		9930	1750	9930	12320	530	2770	3370	2.4	12.7	15.4	3.58	B
		2200	3300	3300	6000		123%	14800	1590	2380	2380	4330		10680	1890	10680	12480	540	2830	3430	2.5	13.0	15.7	3.77	A
		2200	3300	3300	7800		138%	16600	1440	2160	2160	5100		10860	2240	10860	12960	560	2940	3580	2.6	13.5	16.4	3.69	A
		2200	3300	4000	4000		113%	13500	1630	2440	2960	2960		9990	1860	9990	12170	530	2730	3340	2.4	12.5	15.3	3.66	A
		2200	3300	4000	6000		129%	15500	1530	2290	2780	4170		10770	1930	10770	12480	550	2840	3440	2.5	13.0	15.7	3.79	A

HEATING		Indoor Unit Combination							Heating Capacity (W)						Capacity			Power Consumption			Current			COP	EG
		A	B	C	D	E	%	Total	A	B	C	D	E	Total	W			W			A				
															MIN	NOM	MAX	MIN	NOM	MAX	MIN	NOM	MAX		
	4 Unit	2200	3300	4000	7800		144%	17300	1400	2100	2540	4960		11000	2280	11000	12960	570	2940	3580	2.6	13.5	16.4	3.74	A
		2200	3300	6000	6000		146%	17500	1390	2070	3770	3770		11000	2240	11000	12960	560	2940	3580	2.6	13.5	16.4	3.74	A
		2200	3300	6000	7800		161%	19300	1250	1880	3420	4450		11000	2320	11000	13110	580	3000	3640	2.7	13.7	16.7	3.67	A
		2200	4000	4000	4000		118%	14200	1560	2830	2830	2830		10050	1890	10050	12320	540	2780	3380	2.5	12.7	15.5	3.62	A
		2200	4000	4000	6000		135%	16200	1470	2670	2670	4010		10820	2200	10820	12800	550	2880	3520	2.5	13.2	16.1	3.76	A
		2200	4000	4000	7800		150%	18000	1350	2440	2440	4770		11000	2280	11000	12960	570	2950	3590	2.6	13.5	16.4	3.73	A
		2200	4000	6000	6000		152%	18200	1330	2410	3630	3630		11000	2280	11000	12960	570	2940	3580	2.6	13.5	16.4	3.74	A
		2200	4000	6000	7800		167%	20000	1210	2200	3300	4290		11000	2360	11000	13430	590	3050	3730	2.7	14.0	17.1	3.61	A
		2200	6000	6000	6000		168%	20200	1190	3270	3270	3270		11000	2320	11000	13430	580	3050	3720	2.7	14.0	17.0	3.61	A
		3300	3300	3300	3300		110%	13200	2490	2490	2490	2490		9960	1820	9960	12480	520	2810	3410	2.4	12.9	15.6	3.54	B
		3300	3300	3300	4000		116%	13900	2380	2380	2380	2880		10020	1860	10020	12320	530	2770	3370	2.4	12.7	15.4	3.62	A
		3300	3300	3300	6000		133%	15900	2240	2240	2240	4080		10800	2160	10800	12800	540	2870	3510	2.5	13.1	16.1	3.76	A
		3300	3300	3300	7800		148%	17700	2050	2050	2050	4850		11000	2240	11000	12960	560	2940	3580	2.6	13.5	16.4	3.74	A
		3300	3300	4000	4000		122%	14600	2410	2410	2920	2920		10660	1860	10660	12480	530	2820	3420	2.4	12.9	15.7	3.78	A
		3300	3300	4000	6000		138%	16600	2160	2160	2620	3930		10870	2200	10870	12960	550	2920	3560	2.5	13.4	16.3	3.72	A
		3300	3300	4000	7800		153%	18400	1970	1970	2400	4660		11000	2280	11000	13110	570	2990	3620	2.6	13.7	16.6	3.68	A
		3300	3300	6000	6000		155%	18600	1950	1950	3550	3550		11000	2240	11000	13110	560	2980	3620	2.6	13.6	16.6	3.69	A
		3300	3300	6000	7800		170%	20400	1780	1780	3240	4200		11000	2320	11000	13590	580	3090	3760	2.7	14.1	17.2	3.56	B
		3300	4000	4000	4000		128%	15300	2320	2810	2810	2810		10750	1890	10750	12480	540	2830	3430	2.5	13.0	15.7	3.80	A
		3300	4000	4000	6000		144%	17300	2100	2540	2540	3820		11000	2200	11000	12960	550	2930	3570	2.5	13.4	16.3	3.75	A
		3300	4000	4000	7800		159%	19100	1910	2300	2300	4490		11000	2280	11000	13110	570	2990	3630	2.6	13.7	16.6	3.68	A
		3300	4000	6000	6000		161%	19300	1880	2280	3420	3420		11000	2280	11000	13110	570	2990	3620	2.6	13.7	16.6	3.68	A
		4000	4000	4000	4000		133%	16000	2700	2700	2700	2700		10800	2160	10800	12800	540	2870	3510	2.5	13.1	16.1	3.76	A
		4000	4000	4000	6000		150%	18000	2440	2440	2440	3680		11000	2240	11000	12960	560	2930	3570	2.6	13.4	16.3	3.75	A
		4000	4000	4000	7800		165%	19800	2220	2220	2220	4340		11000	2320	11000	13430	580	3040	3720	2.7	13.9	17.0	3.62	A
		4000	4000	6000	6000		167%	20000	2200	2200	3300	3300		11000	2280	11000	13430	570	3040	3710	2.6	13.9	17.0	3.62	A
	5 Unit	2200	2200	2200	2200	2200	92%	11000	2200	2200	2200	2200	2200	11000	1650	11000	13110	550	2970	3610	2.5	13.6	16.5	3.70	A
		2200	2200	2200	2200	3300	101%	12100	2080	2080	2080	2080	3120	11440	1820	11440	12960	550	2930	3570	2.5	13.4	16.3	3.90	A
		2200	2200	2200	2200	4000	107%	12800	1990	1990	1990	1990	3620	11580	1850	11580	13110	560	2980	3610	2.6	13.6	16.5	3.89	A
		2200	2200	2200	2200	6000	123%	14800	1710	1710	1710	1710	4660	11500	2000	11500	13430	570	3040	3710	2.6	13.9	17.0	3.78	A
		2200	2200	2200	2200	7800	138%	16600	1580	1580	1580	1580	5610	11930	2360	11930	13750	590	3140	3810	2.7	14.4	17.4	3.80	A
		2200	2200	2200	3300	3300	110%	13200	1950	1950	1950	2930	2930	11710	1930	11710	13430	550	3020	3690	2.5	13.8	16.9	3.88	A
		2200	2200	2200	3300	4000	116%	13900	1880	1880	1880	2820	3420	11880	1960	11880	13110	560	2980	3610	2.6	13.6	16.5	3.99	A
		2200	2200	2200	3300	6000	133%	15900	1630	1630	1630	2440	4450	11780	2280	11780	13590	570	3080	3750	2.6	14.1	17.2	3.82	A
		2200	2200	2200	3300	7800	148%	17700	1490	1490	1490	2240	5290	12000	2360	12000	13900	590	3190	3860	2.7	14.6	17.7	3.76	A
		2200	2200	2200	4000	4000	122%	14600	1730	1730	1730	3140	3140	11470	1960	11470	13430	560	3030	3700	2.6	13.9	16.9	3.79	A
		2200	2200	2200	4000	6000	138%	16600	1580	1580	1580	2880	4320	11940	2320	11940	13750	580	3130	3800	2.7	14.3	17.4	3.81	A
		2200	2200	2200	4000	7800	153%	18400	1430	1430	1430	2620	5090	12000	2400	12000	14000	600	3240	3940	2.7	14.8	18.0	3.70	A
		2200	2200	2200	6000	6000	155%	18600	1420	1420	1420	3870	3870	12000	2360	12000	14000	590	3230	3940	2.7	14.8	18.0	3.72	A
		2200	2200	3300	3300	3300	119%	14300	1840	1840	2760	2760	2760	11960	1930	11960	13430	550	3020	3690	2.5	13.8	16.9	3.96	A
		2200	2200	3300	3300	4000	125%	15000	1690	1690	2540	2540	3080	11540	1960	11540	13590	560	3070	3740	2.6	14.1	17.1	3.76	A
		2200	2200	3300	3300	6000	142%	17000	1550	1550	2330	2330	4240	12000	2280	12000	13900	570	3170	3840	2.6	14.5	17.6	3.79	A
		2200	2200	3300	3300	7800	157%	18800	1400	1400	2110	2110	4980	12000	2360	12000	14000	590	3280	3940	2.7	15.0	18.0	3.66	A
		2200	2200	3300	4000	4000	131%	15700	1640	1640	2470	2990	2990	11730	2240	11730	13590	560	3070	3740	2.6	14.1	17.1	3.82	A
		2200	2200	3300	4000	6000	148%	17700	1490	1490	2240	2710	4070	12000	2320	12000	13900	580	3170	3840	2.7	14.5	17.6	3.79	A
		2200	2200	3300	4000	7800	163%	19500	1350	1350	2040	2460	4800	12000	2400	12000	14000	600	3280	3940	2.7	15.0	18.0	3.66	A
		2200	2200	3300	6000	6000	164%	19700	1340	1340	2020	3650	3650	12000	2360	12000	14000	590	3280	3940	2.7	15.0	18.0	3.66	A
		2200	2200	4000	4000	4000	137%	16400	1600	1600	2900	2900	2900	11900	2280	11900	13750	570	3120	3790	2.6	14.3	17.3	3.81	A
		2200	2200	4000	4000	6000	153%	18400	1430	1430	2610	2610	3920	12000	2320	12000	14000	580	3220	3930	2.7	14.7	18.0	3.73	A
		2200	3300	3300	3300	3300	128%	15400	1670	2500	2500	2500	2500	11670	1930	11670	13590	550	3060	3730	2.5	14.0	17.1	3.81	A
		2200	3300	3300	3300	4000	134%	16100	1620	2420	2420	2420	2940	11820	2240	11820	13750	560	3110	3780	2.6	14.2	17.3	3.80	A
		2200	3300	3300	3300	6000	151%	18100	1460	2190	2190	2190	3970	12000	2280	12000	14000	570	3210	3920	2.6	14.7	17.9	3.74	A
		2200	3300	3300	3300	7800	166%	19900	1330	1990	1990	1990	4700	12000	2360	12000	14000	590	3320	3940	2.7	15.2	18.0	3.61	A
		2200	3300	3300	4000	4000	140%	16800	1570	2350	2360	2860	2860	12000	2240	12000	13900	560	3160	3830	2.6	14.5	17.5	3.80	A
		2200	3300	3300	4000	6000	157%	18800	1400	2110	2110	2550	3830	12000	2320	12000	14000	580	3260	3920	2.7	14.9	17.9	3.68	A
		2200	3300	3300	4000	7800	172%	20600	1290	1920	1920	2330	4540	12000	2400	12000	14000	600	3370	3940	2.7	15.4	18.0	3.56	B
		2200	3300	3300	6000	6000	173%	20800	1280	1900	1900	3460	3460	12000	2360	12000	14000	590	3370	3940	2.7	15.4	18.0	3.56	B
		2200	3300	4000	4000	4000	146%	17500	1520	2260	2740	2740	2740	12000	2280	12000	13900	570	3160	3830	2.6	14.5	17.5	3.80	A
		2200	3300	4000	4000	6000	163%	19500	1360	2030	2460	2460	3690	12000	2320	12000	14000	580	3270	3930	2.7	15.0	18.0	3.67	A
		2200	4000	4000	4000	4000	152%	18200	1440	2640	2640	2640	2640	12000	2280	12000	14000	570	3210	3920	2.6	14.7	17.9	3.74	A
		3300	3300	3300	3300	3300	138%	16500	2400	2400	2400	2400	2400	12000	3400	12000	14000	550	2930	3900	2.5	13.4	17.8	4.10	A
		3300	3300	3300	3300	4000	143%	17200	2300	2300	2300	2300	2800	12000	2240	12000	13900	560	3150	3820	2.6	14.4	17.5	3.81	A
		3300	3300	3300	3300	6000	160%	19200	2060	2060	2060	2060	3760	12000	2280	12000	14000	570	3260	3920	2.6	14.9	17.9	3.68	A
		3300	3300	3300	3300	7800	175%	21000	1890	1890	1890	1890	4440	12000	2360	12000	14000	590	3370	3940	2.7	15.4	18.0	3.56	B
		3300	3300	3300	4000	4000	149%	17900	2210	2210	2210	2680	2690	12000	2240	12000	14000	560	3200	3910	2.6	14.6	17.9	3.75	A
		3300	3300	3300	4000	6000	166%	19900	1990	1990	1990	2410	3620	12000	2320	12000	14000	580	3310	3920	2.7	15.1	17.9	3.63	A
		3300	3300	4000	4000	4000	155%	18600	2130	2130	2580	2580	2580	12000	2280	12000	14000	570	3250	3910	2.6	14.9	17.9	3.69	A
		3300	3300	4000	4000	6000	172%	20600	1920	1920	2330	2330	3500	12000	3400	12000	14000	580	3360	3930	2.7	15.4	18.0	3.57	B
		3300	4000	4000	4000	4000	161%	19300	2040	2490	2490	2490	2490	12000	2280	12000	14000	570	3260	3920	2.6	14.9	17.9	3.68	A

* All figures comply with EN14511

1. Heating capacity is based on 20°CDB (indoor temperature), 7°CDB/6°CWB (outdoor temperature).
2. The above is the value for connecting with the following indoor units.
   - 2200, 3300, 4000, 6000, 7800W class: Wall Mounted Madives P Series, Maldives DELUXE [only for AQV**PSBN, AQV***PMEN, AQV***PMBN]
3. Capacities are based on the following conditions:
   - Corresponding refrigerant piping length : 5m / - Level difference : 0m
4. The total ability of connected a indoor unit is up to 20.6 kW (@ Heating)
5. It is impossible to connect the indoor unit for one room only.
6. Power consumption include indoor unit power.

3 Dimensional drawing

3-1. Outdoor units

1) AJ040/050FCJ2EH/EU

(Unit : mm)

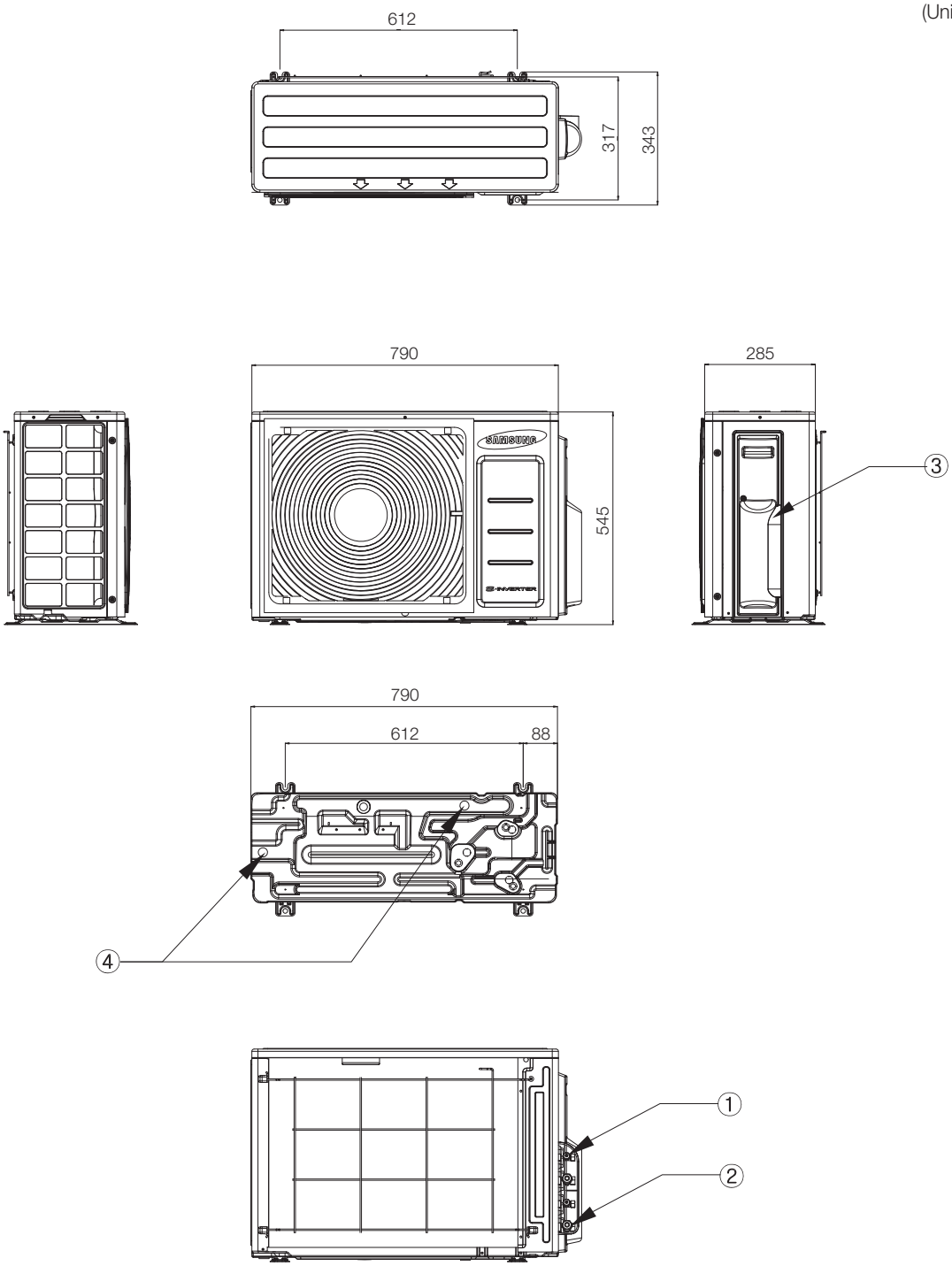

No.	Name	Description	
		4.0kW	5.0kW
①	Liquid pipe connection	Ø6.35(x 2) Flare	
②	Gas pipe connection	Ø9.52(x 2) Flare	Ø9.52, Ø12.7 Flare
③	Power & communication Wiring conduit	-	
④	Drain pipe	-	

2) AJ052FCJ3EH/EU

(Unit : mm)

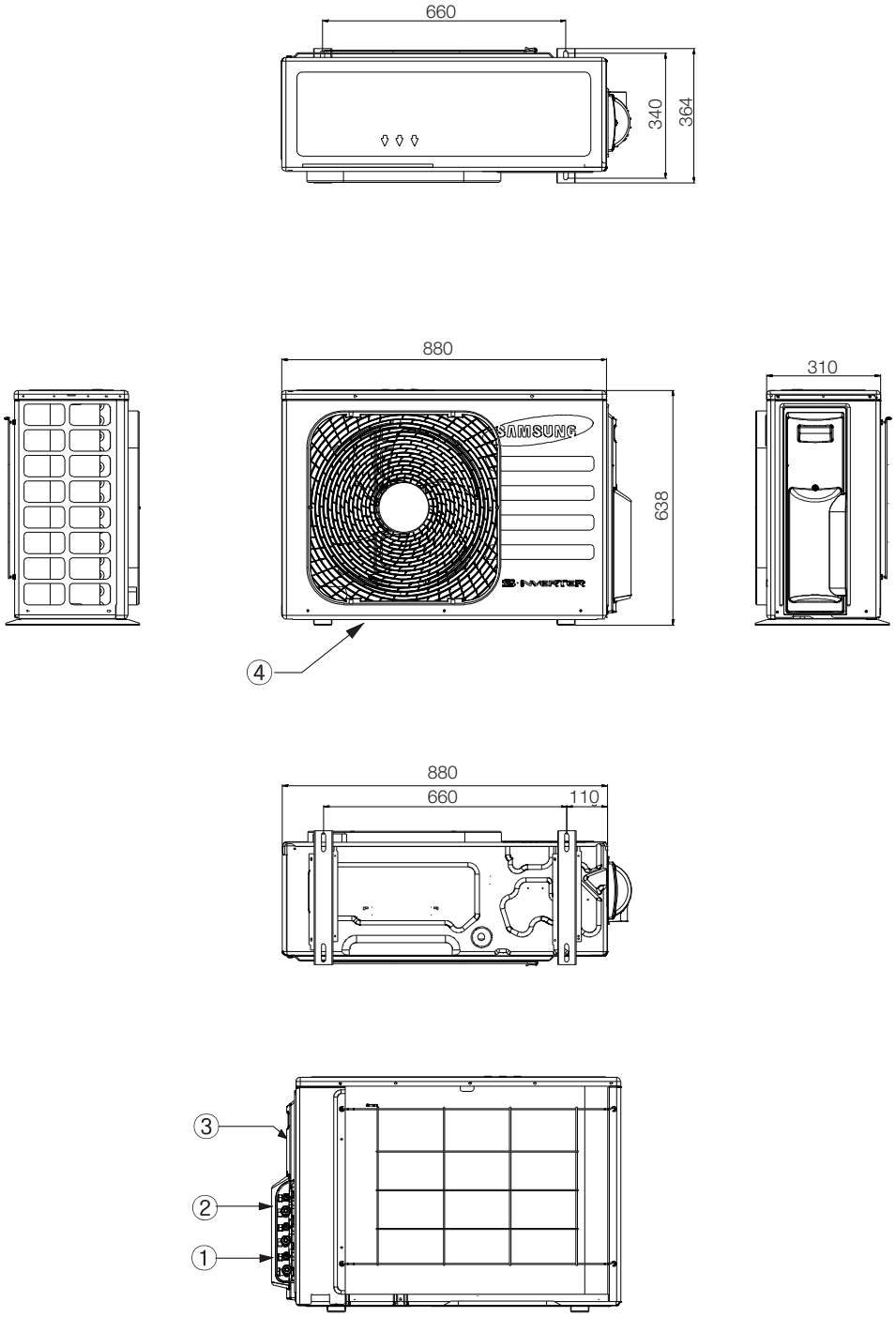

No.	Name	Description
		5.2kW
①	Liquid pipe connection	Ø6.35(x 3) Flare
②	Gas pipe connection	Ø9.52(x 2), Ø12.7 Flare
③	Power & communication Wiring conduit	-
④	Drain pipe	-

3 Dimensional drawing

3-1. Outdoor units

3) AJ068FCJ3EH/EU, AJ070/080FCJ4EH/EU

(Unit : mm)

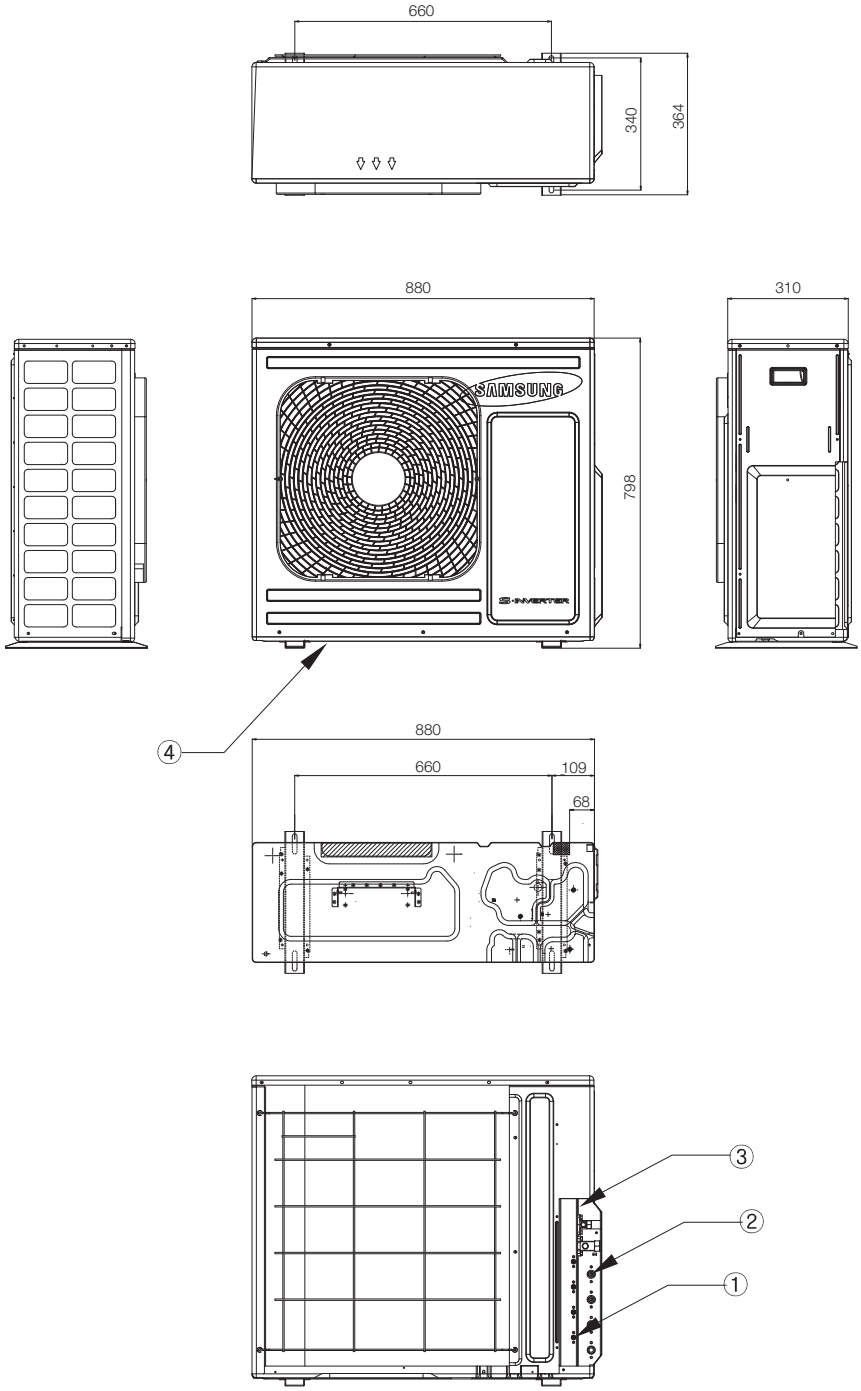

No.	Name	Description		
		6.0kW	7.0kW	8.0kW
①	Liquid pipe connection	Ø6.35(x 3) Flare	Ø6.35(x 4) Flare	
②	Gas pipe connection	Ø9.52(x 2), Ø12.7 Flare	Ø9.52(x2), Ø12.7(x 2) Flare	
③	Power & communication Wiring conduit	-		
④	Drain pipe	-		

4) AJ100FCJ5EH/EU

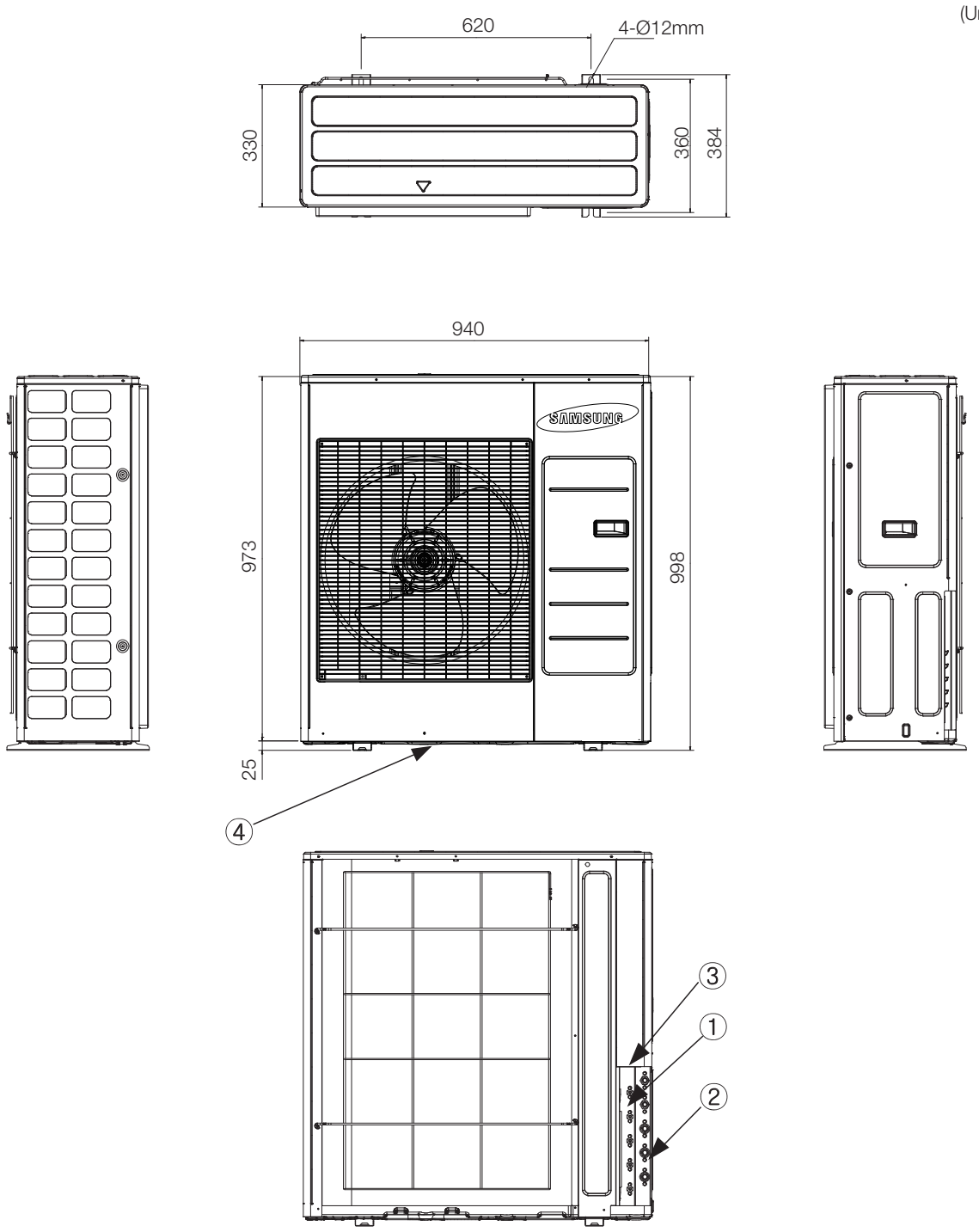

No.	Name	Description
		10.0kW
①	Liquid pipe connection	Ø6.35(x 5) Flare
②	Gas pipe connection	Ø9.52(x 2), Ø12.7(x 5) Flare
③	Power & communication Wiring conduit	-
④	Drain pipe	-

3 Dimensional drawing

3-2. Indoor units

1) P-Series (Maldives) - ① AR07/09/12FSFPDGMN

(Unit : mm)

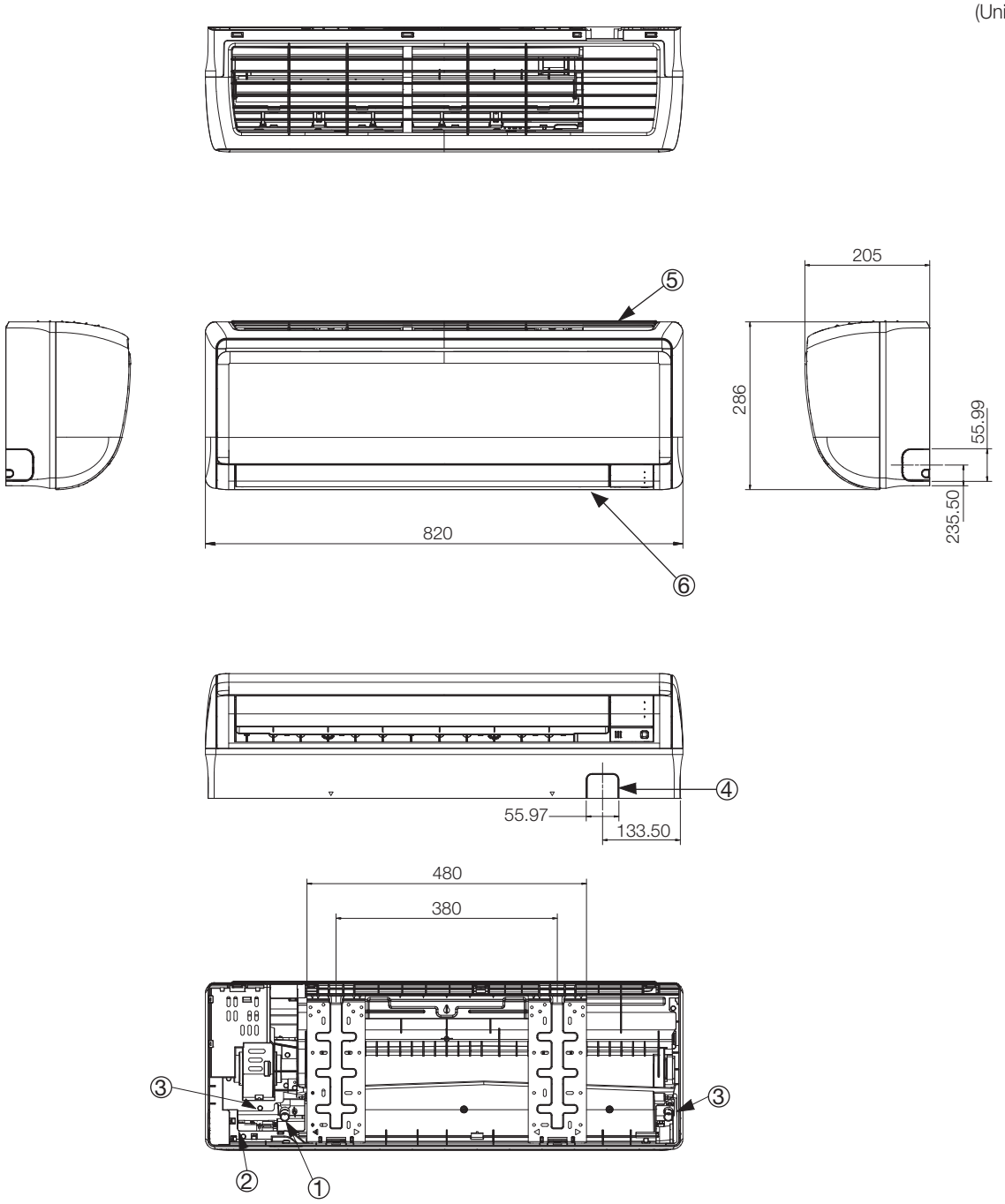

No.	Name	Description		
		2.0kW	2.5kW	3.5kW
①	Liquid pipe connection	Ø6.35 Flare		
②	Gas pipe connection	Ø9.52 Flare		
③	Drain pipe connection	ID 18Hose		
④	Conduit for power supply & communication wiring	-		
⑤	Air inlet grille	-		
⑥	Air outlet louver	-		

1) P-Series (Maldives) - ② AR18/24FSFPDGMN

(Unit : mm)

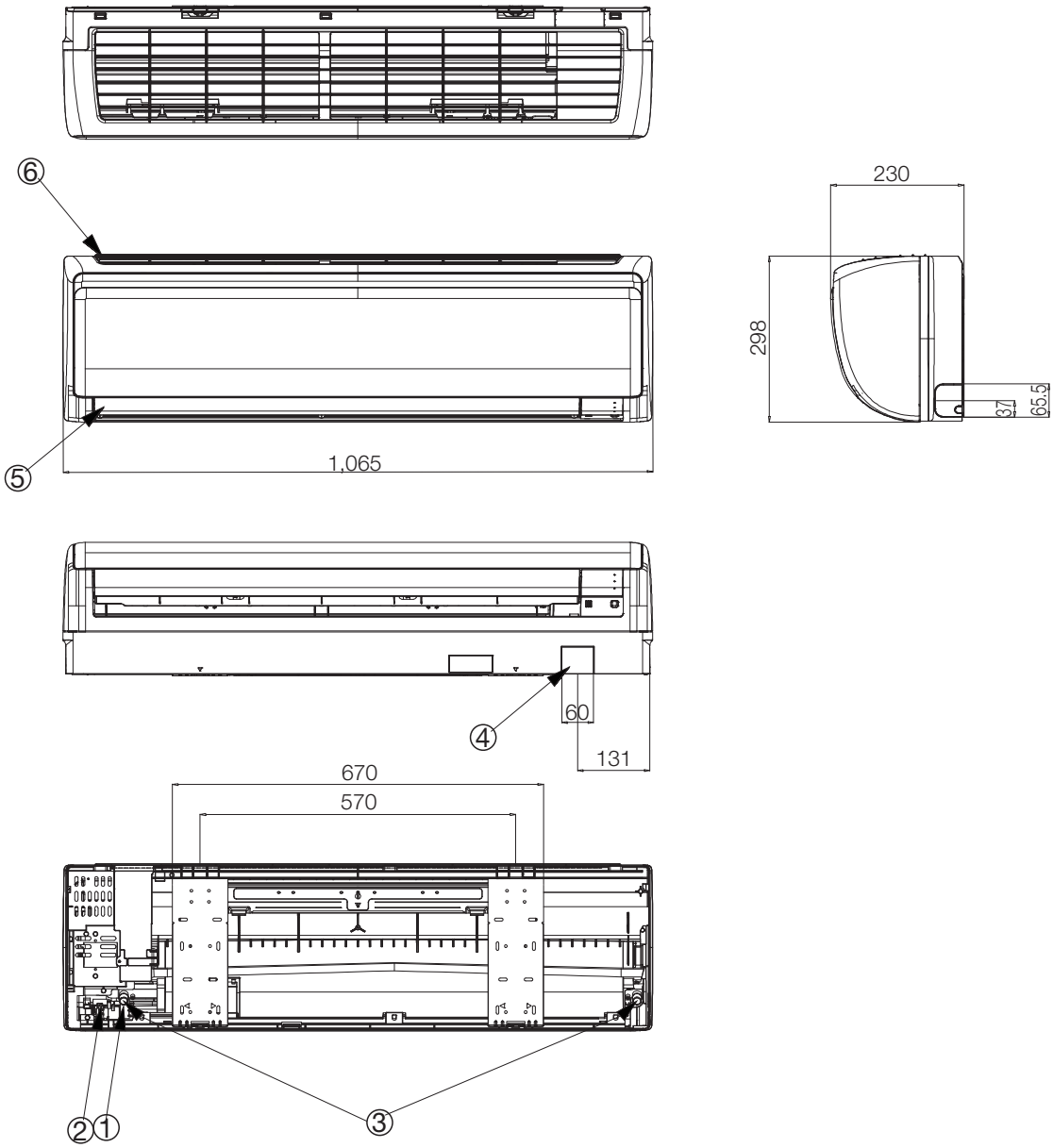

No.	Name	Description	
		5.0kW	6.8kW
①	Liquid pipe connection	Ø6.35 Flare	
②	Gas pipe connection	Ø12.70 Flare	Ø15.88 Flare
③	Drain pipe connection	ID 18Hose	
④	Conduit for power supply & communication wiring	-	-
⑤	Air inlet grille	-	-
⑥	Air outlet louver	-	-

3 Dimensional drawing

3-2. Indoor units

2) DELUXE (Maldives++) - ① AR07/09/12FSFPESNN

(Unit : mm)

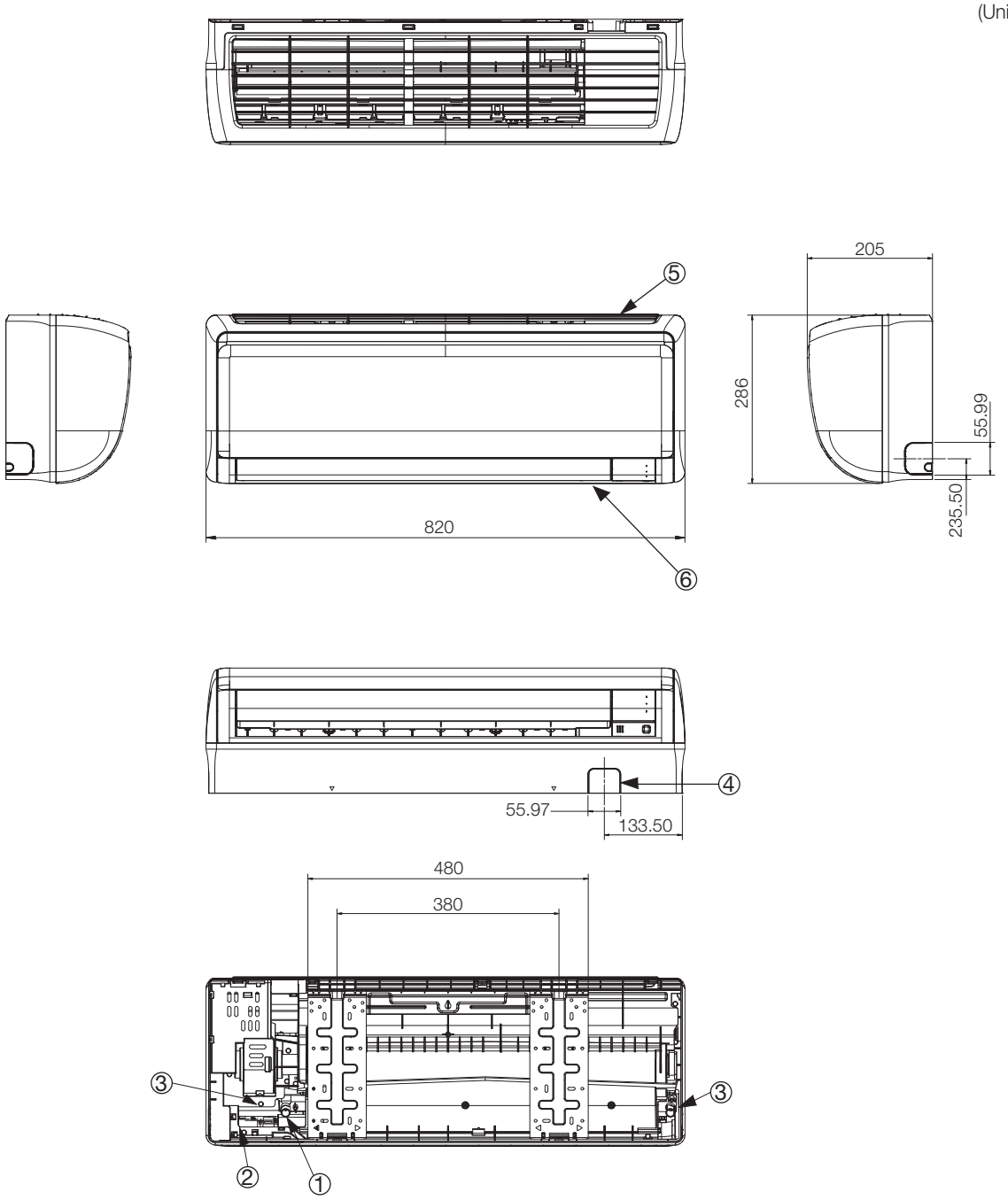

No.	Name	Description		
		2.0kW	2.5kW	3.5kW
①	Liquid pipe connection	Ø6.35 Flare		
②	Gas pipe connection	Ø9.52 Flare		
③	Drain pipe connection	ID 18Hose		
④	Conduit for power supply & communication wiring	-		
⑤	Air inlet grille	-		
⑥	Air outlet louver	-		

2) DELUXE (Maldives++) - ② AR18/24FSFPESNN

(Unit : mm)

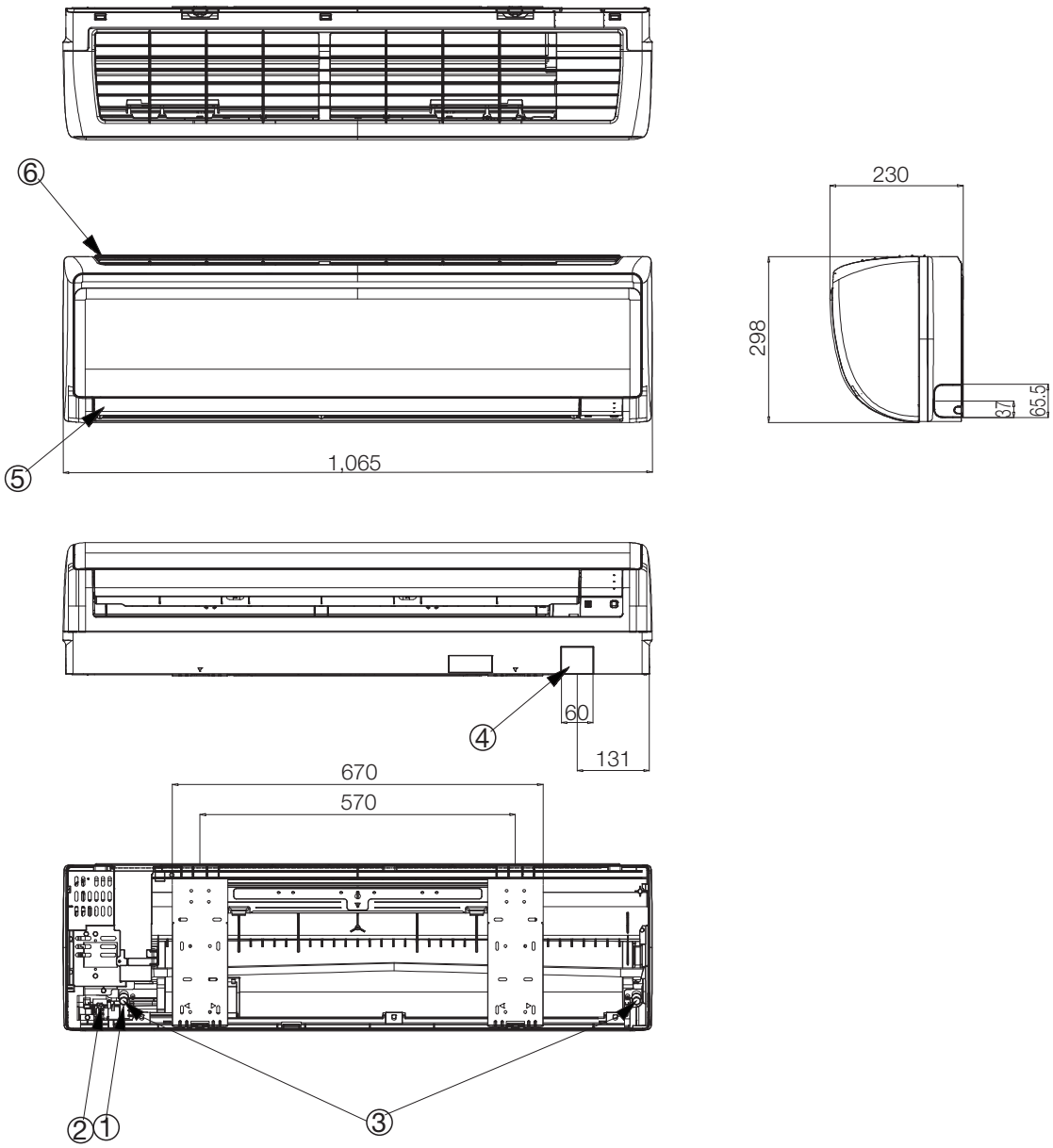

No.	Name	Description	
		5.0kW	6.8kW
①	Liquid pipe connection	Ø6.35 Flare	
②	Gas pipe connection	Ø12.70 Flare	Ø15.88 Flare
③	Drain pipe connection	ID 18Hose	
④	Conduit for power supply & communication wiring	-	-
⑤	Air inlet grille	-	-
⑥	Air outlet louver	-	-

3 Dimensional drawing

3-2. Indoor units

3) Neo-Forte - ① MH020/026/035FNEA

(Unit : mm)

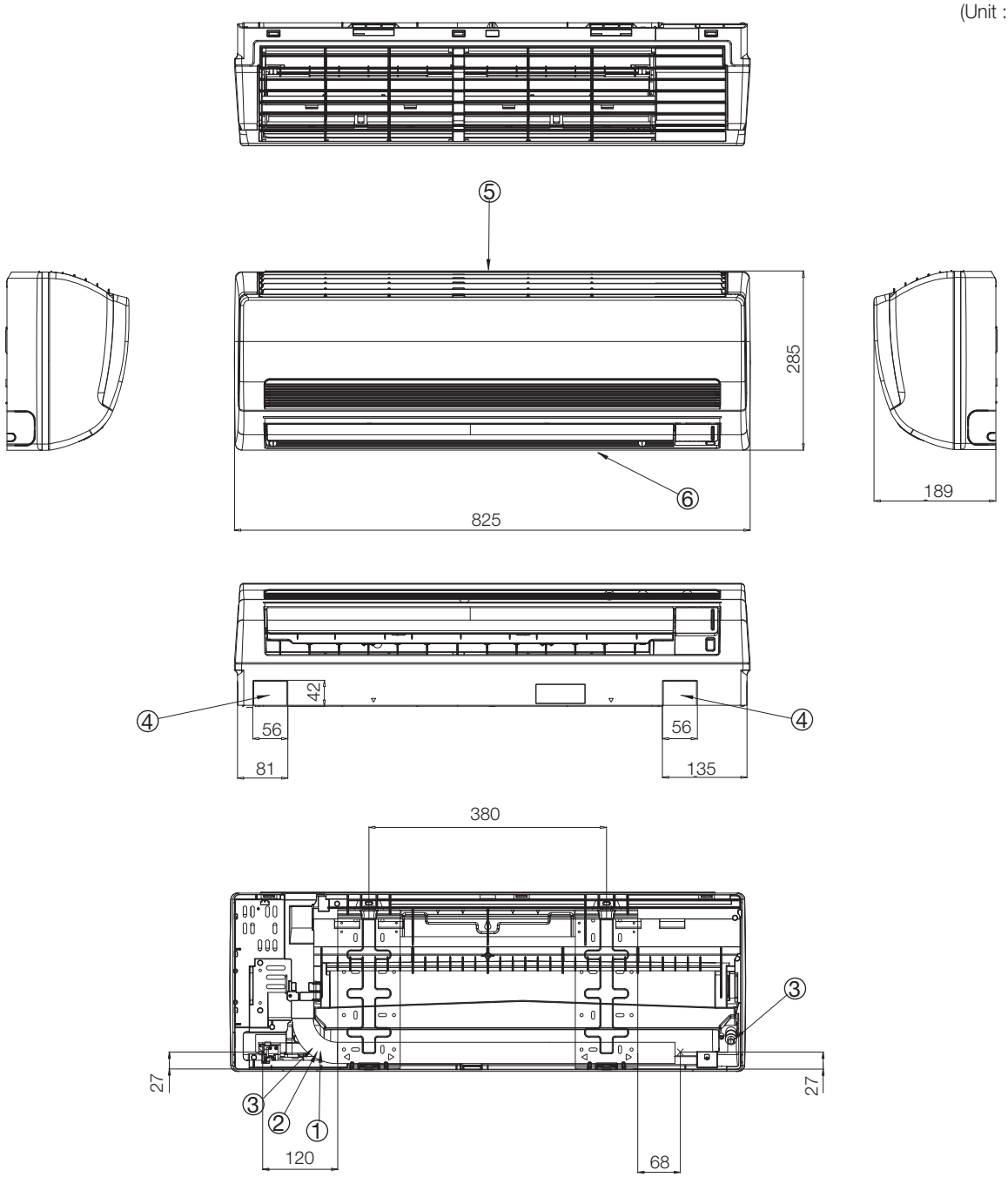

No.	Name	Description		
		2.0kW	2.6kW	3.5kW
①	Liquid pipe connection	Ø6.35 Flare		
②	Gas pipe connection	Ø9.52 Flare		
③	Drain pipe connection	ID 18Hose		
④	Conduit for power supply & communication wiring	-		
⑤	Air inlet grille	-		
⑥	Air outlet louver	-		

3) Neo-Forte - ② MH052FNEA

(Unit : mm)

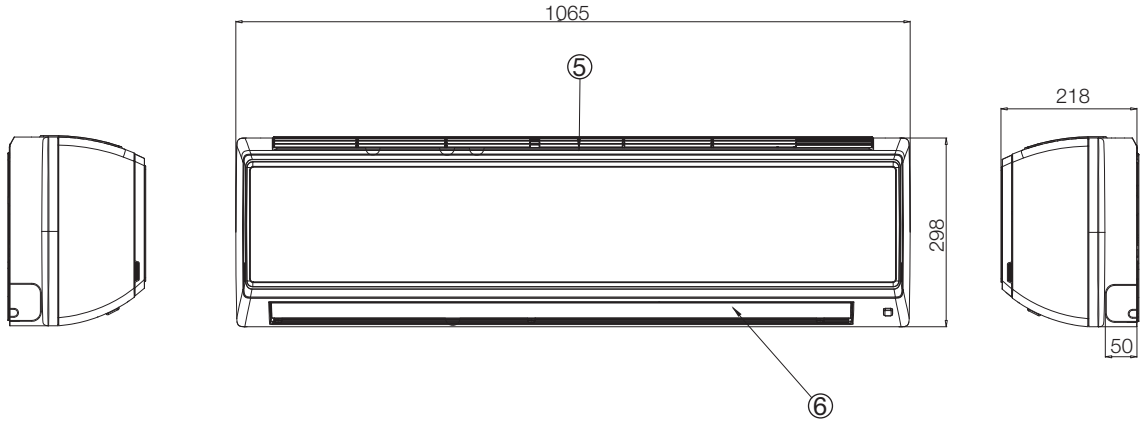

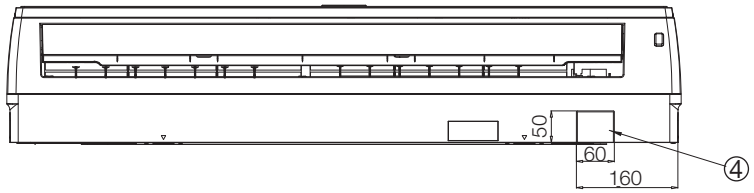

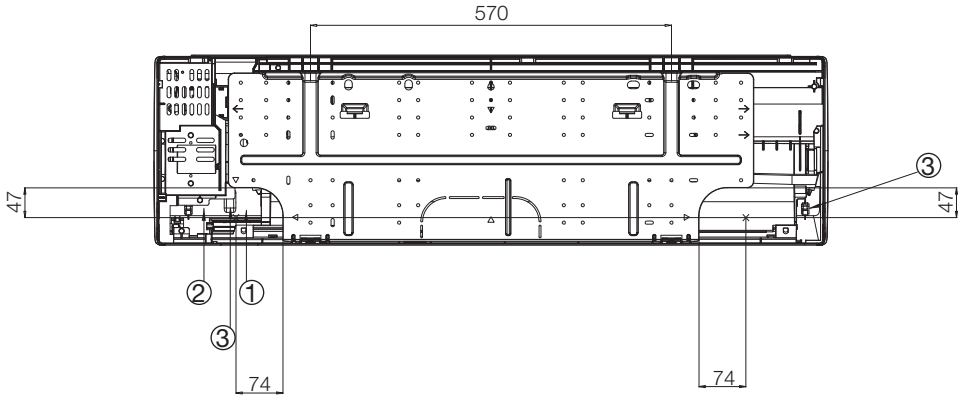

No.	Name	Description
		5.6kW
①	Liquid pipe connection	Ø6.35 Flare
②	Gas pipe connection	Ø12.70 Flare
③	Drain pipe connection	ID 18Hose
④	Conduit for power supply & communication wiring	-
⑤	Air inlet grille	-
⑥	Air outlet louver	-

3 Dimensional drawing

3-2. Indoor units

4) Crystal - ① MH020/026/035FAEA, New Crystal - ① AR09/12/18FSSEDWUN

(Unit : mm)

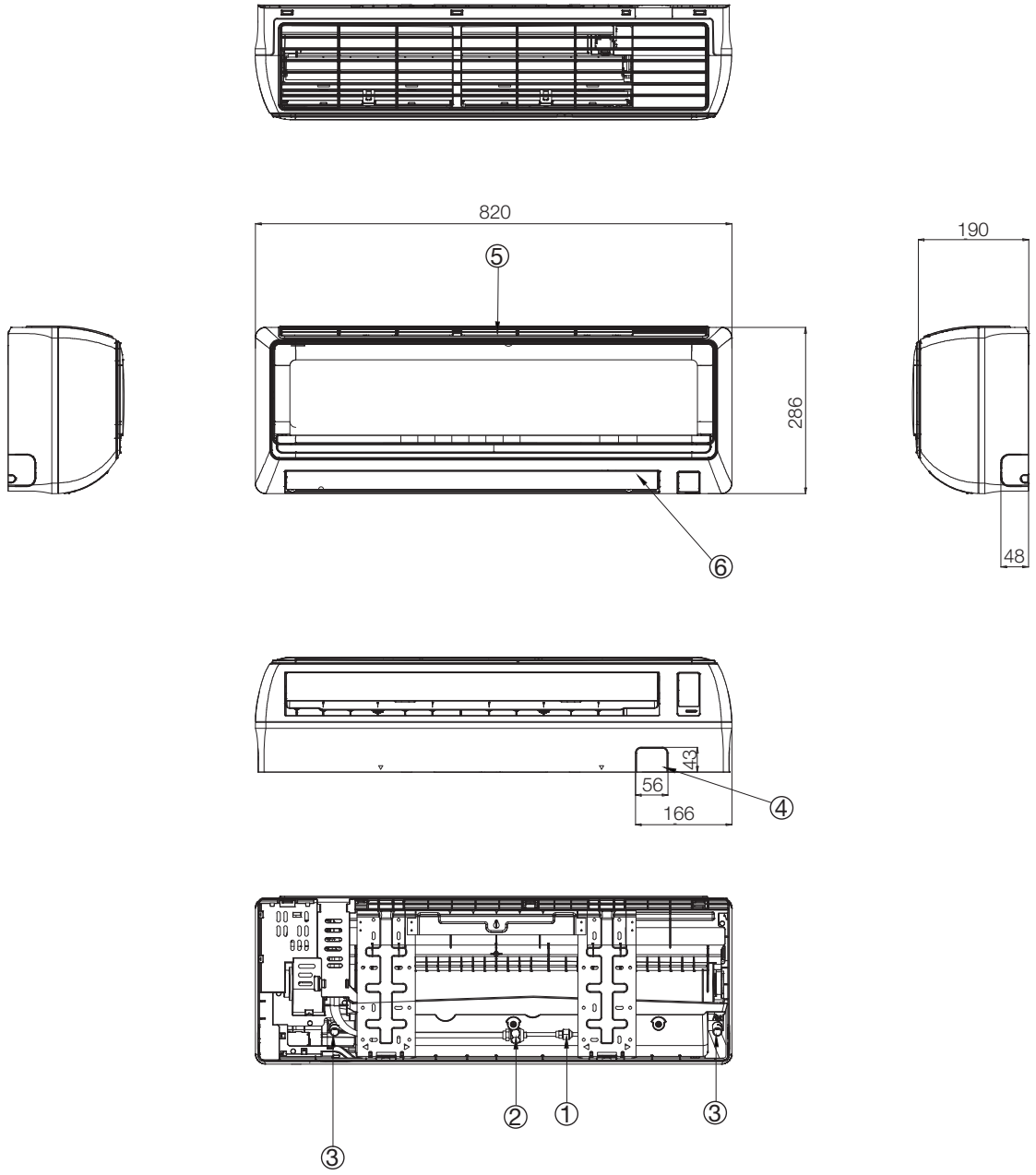

No.	Name	Description		
		2.0kW	2.6kW	3.5kW
①	Liquid pipe connection	Ø6.35 Flare		
②	Gas pipe connection	Ø9.52 Flare		
③	Drain pipe connection	ID 18Hose		
④	Conduit for power supply & communication wiring	-		
⑤	Air inlet grille	-		
⑥	Air outlet louver	-		

4) Crystal - ② MH052FAEA, New Crystal - ② AR24FSSEDWUN

(Unit : mm)

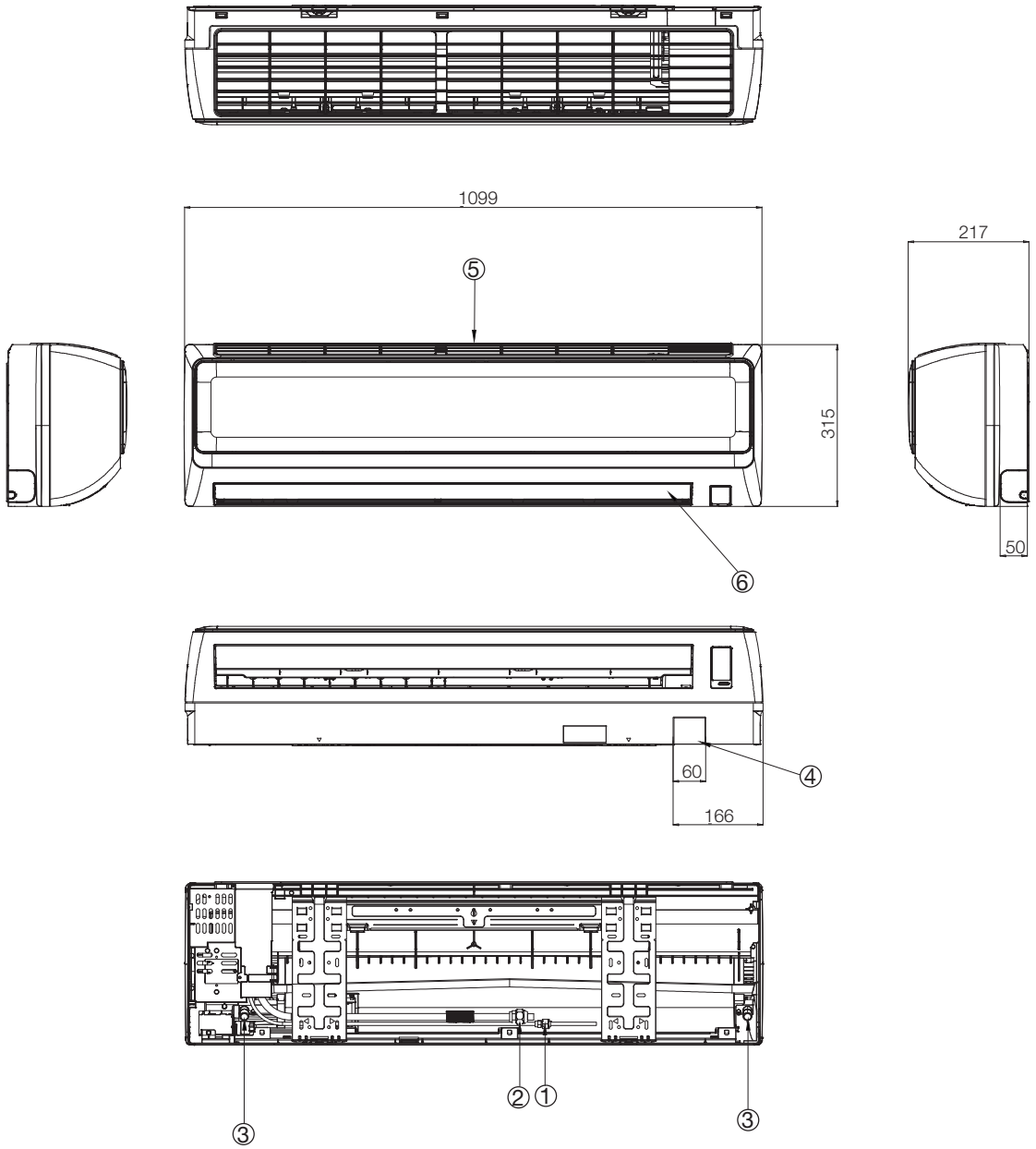

No.	Name	Description
		5.2kW
①	Liquid pipe connection	Ø6.35 Flare
②	Gas pipe connection	Ø12.70 Flare
③	Drain pipe connection	ID 18Hose
④	Conduit for power supply & communication wiring	-
⑤	Air inlet grille	-
⑥	Air outlet louver	-

3 Dimensional drawing

3-2. Indoor units

5) Y- Series (Jungfrau Premium) - ① AR09FSSYAWTN

(Unit : mm)

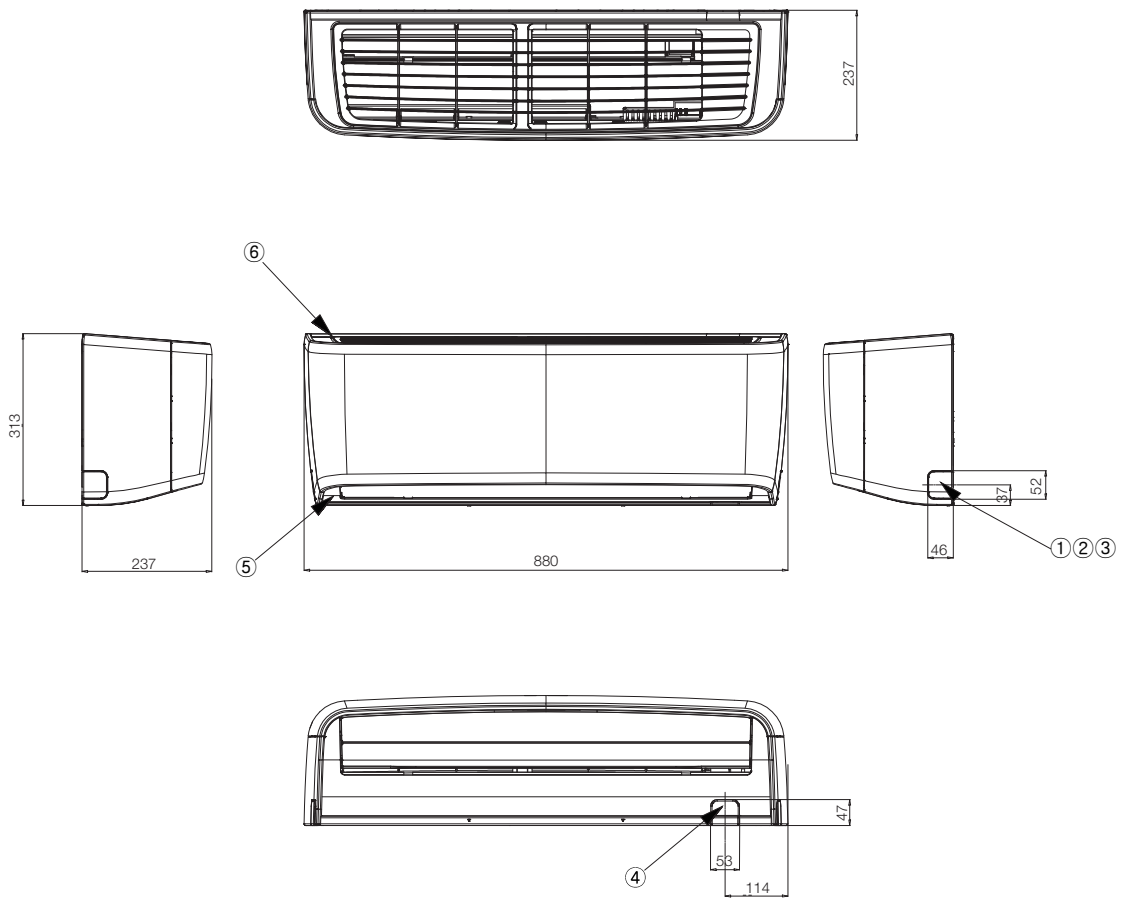

No.	Name	Description		
		2.5kW	3.5kW	5.0kW
①	Liquid pipe connection	Ø6.35 Flare		
②	Gas pipe connection	Ø9.52 Flare		Ø12.70 Flare
③	Drain pipe connection	ID 18Hose		
④	Conduit for power supply & communication wiring	-		
⑤	Air outlet louver	-		
⑥	Air inlet grille	-		

6) Slim 1way Cassette - ① MH026/035FSEA

(Unit : mm)

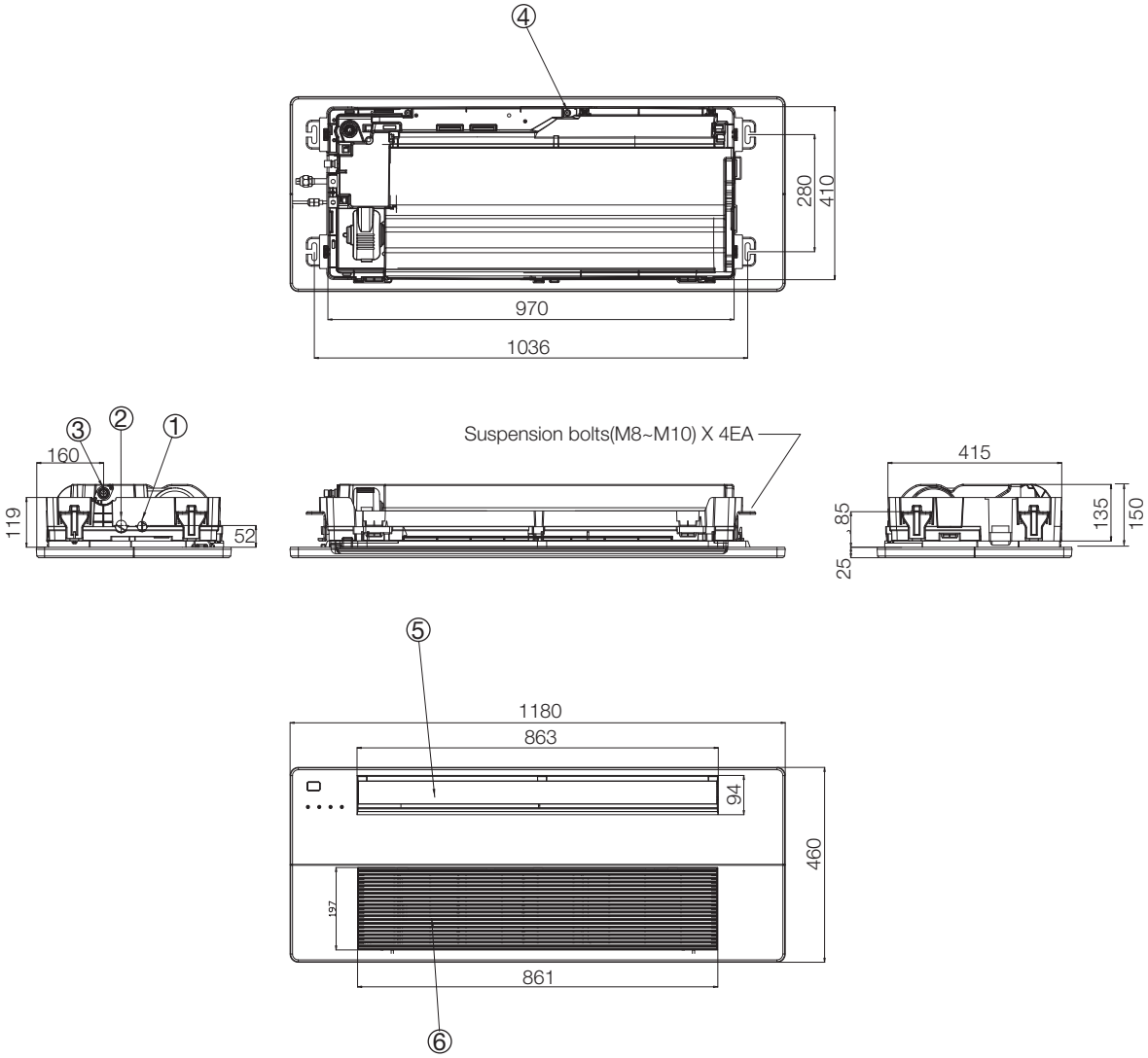

No.	Name	Description	
		2.6kW	3.5kW
①	Liquid pipe connection	Ø6.35 Flare	
②	Gas pipe connection	Ø9.52 Flare	
③	Drain pipe connection	VP20(OD 26, ID20)	
④	Conduit for power supply & communication wiring	-	
⑤	Air outlet louver	-	
⑥	Air inlet grille	-	
⑦	Panel model	PSSMA	

3 Dimensional drawing

3-2. Indoor units

7) Mini 4way Cassette - ① AJN016/020/026/035/052NDEHA/EU

(Unit : mm)

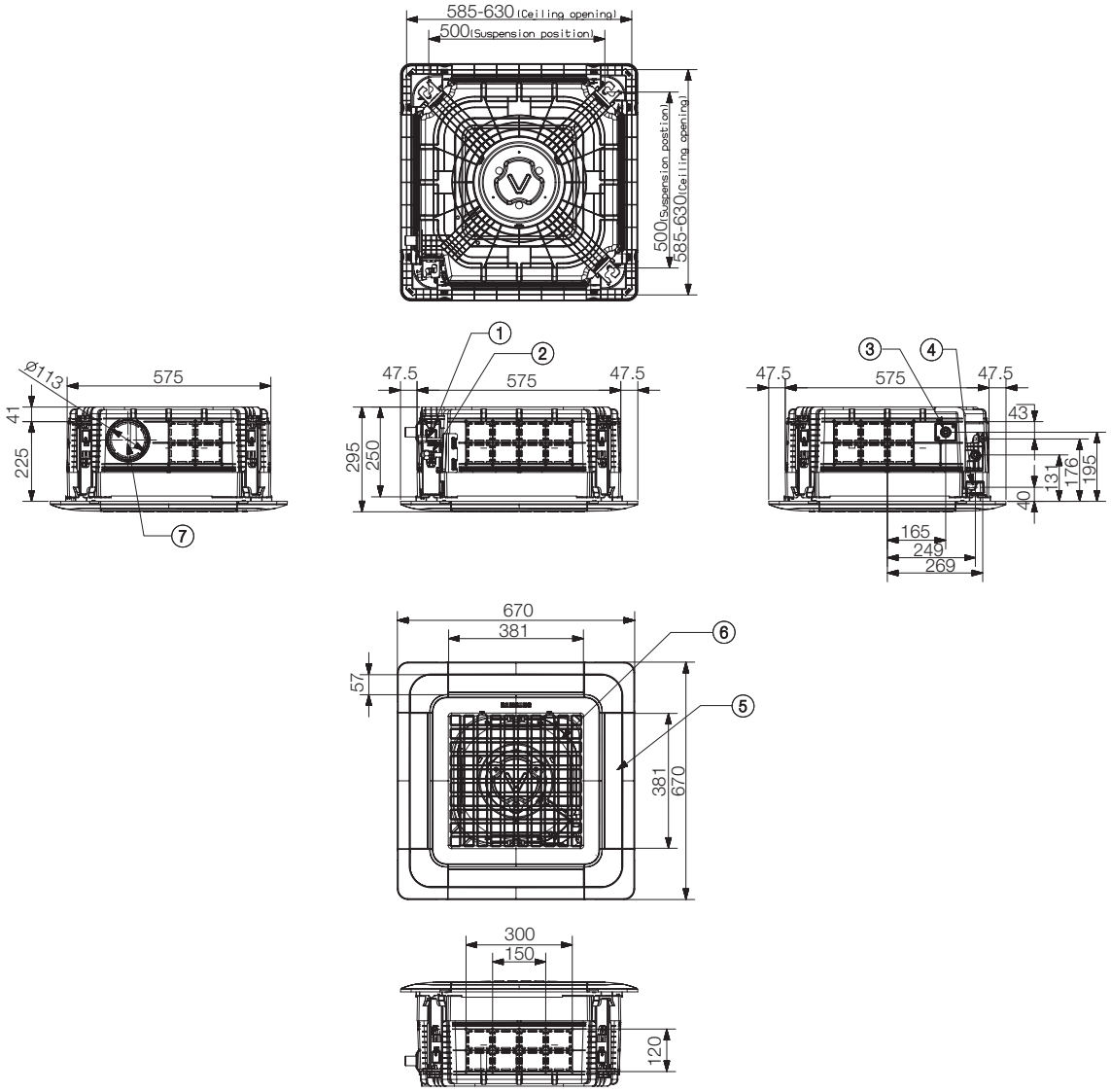

No.	Name	Description				
		1.6kW	2.0kW	2.6kW	3.5kW	5.2kW
①	Liquid pipe connection	Ø6.35 Flare				
②	Gas pipe connection	Ø9.52 Flare				Ø12.70 Flare
③	Drain pipe connection	VP25(OD 32, ID25)				
④	Conduit for power supply & communication wiring	-				
⑤	Air outlet louver	-				
⑥	Air inlet grille	-				
⑦	Fresh air intake	Ø100				

8) Slim Duct - ① NJ026/035LHXEA

(Unit : mm)

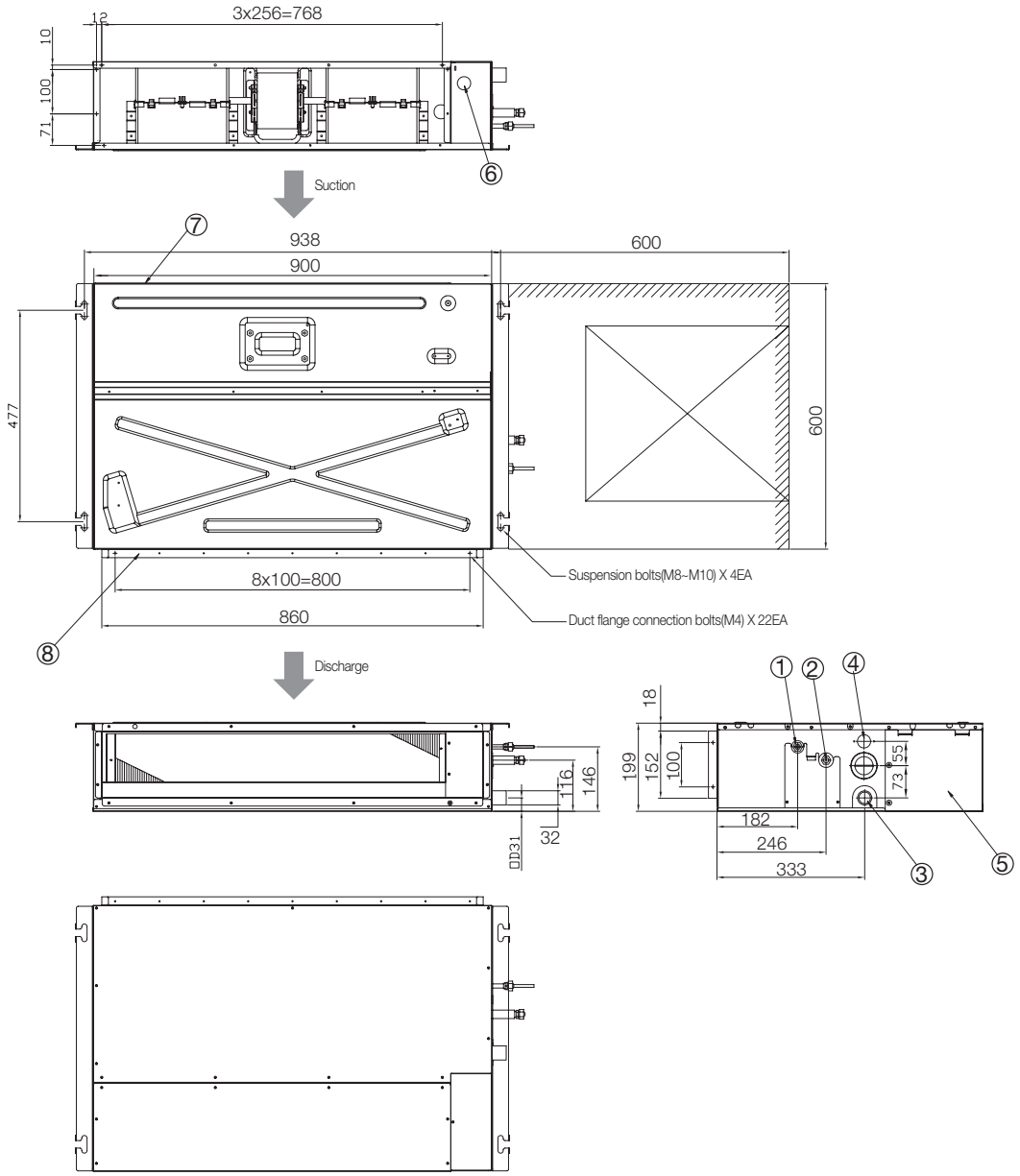

No.	Name	Description	
		2.6kW	3.5kW
①	Liquid pipe connection	Ø6.35 Flare	
②	Gas pipe connection	Ø9.52 Flare	
③	Drain pipe connection without optional drain pump kits	VP25(OD 32, ID25)	
④	Drain pipe connection with optional drain pump kits	-	
⑤	Control unit	-	
⑥	Conduit for power supply & communication wiring	-	
⑦	Return air side	-	
⑧	Air outlet duct flange	-	

3 Dimensional drawing

3-2. Indoor units

9) MSP Duct - ① MH052FUEA

(Unit : mm)

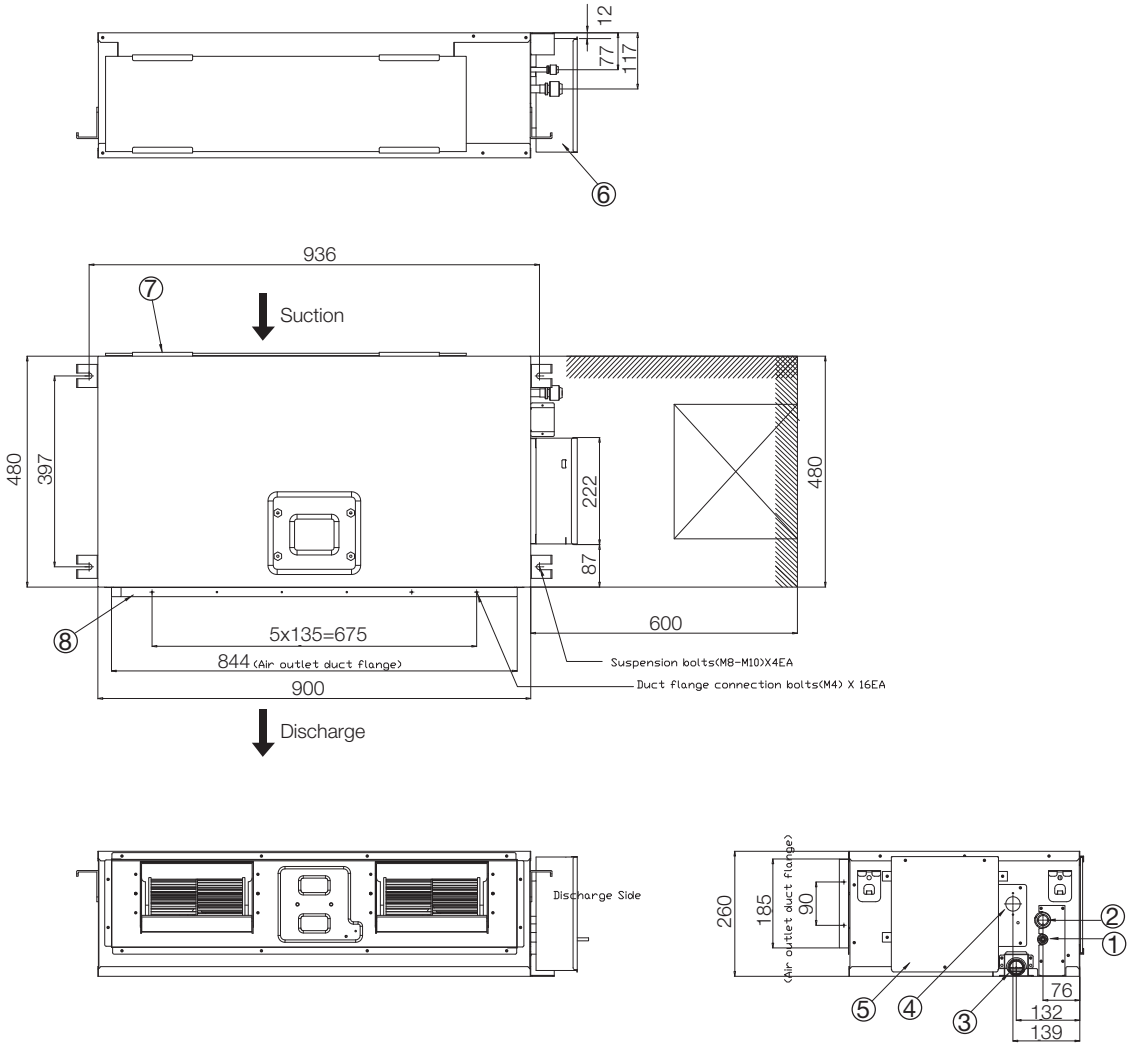

No.	Name	Description
		5.2kW
①	Liquid pipe connection	Ø6.35 Flare
②	Gas pipe connection	Ø12.70 Flare
③	Drain pipe connection without optional drain pump kits	VP25(OD 32, ID25)
④	Drain pipe connection with optional drain pump kits	-
⑤	Control unit	-
⑥	Conduit for power supply & communication wiring	-
⑦	Return air side	-
⑧	Air outlet duct flange	-

10) Console - ① MH026/035/052FJEA

(Unit : mm)

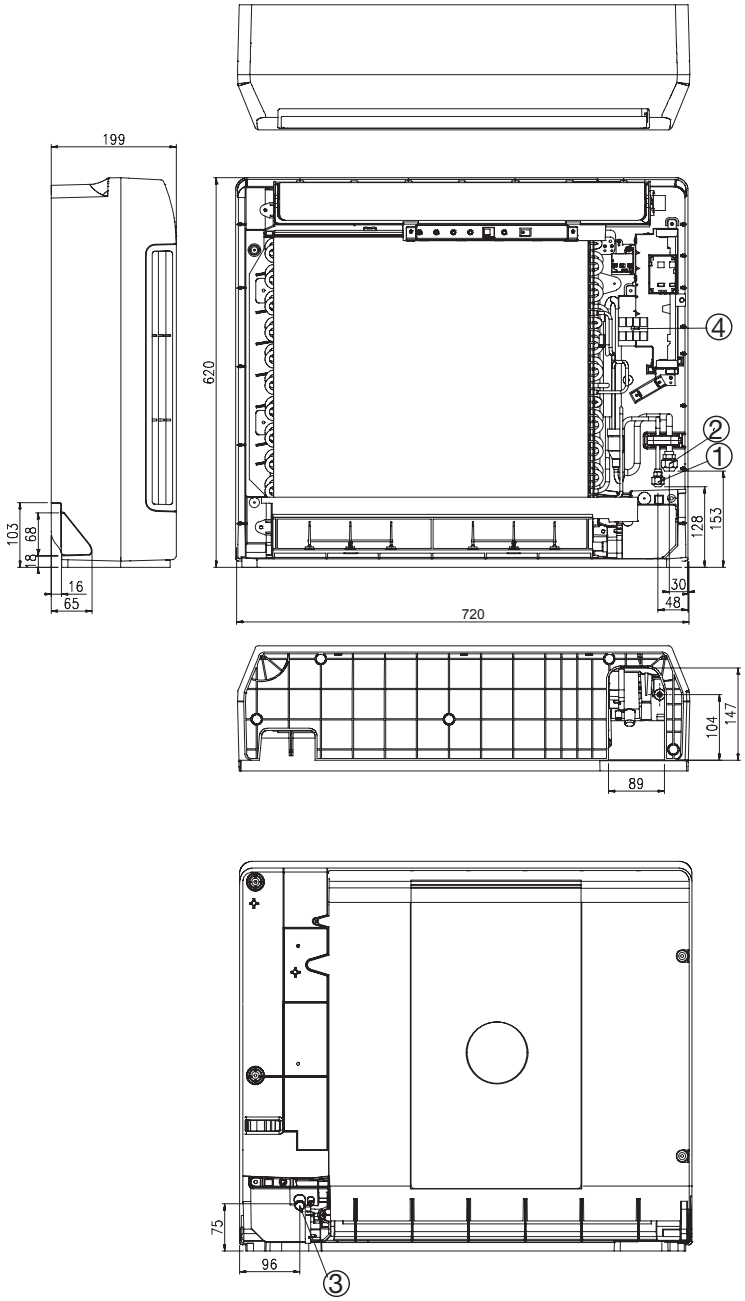

No.	Name	Description	
		2.6kW / 3.5kW	5.2kW
①	Liquid pipe connection	Ø6.35 Flare	
②	Gas pipe connection	Ø9.52 Flare	Ø12.70 Flare
③	Drain pipe connection	ID 18Hose	
④	Conduit for power supply & communication wiring	-	

4 Electrical wiring diagram

4-1. Outdoor units

1) AJ040/050FCJ2EH/EU

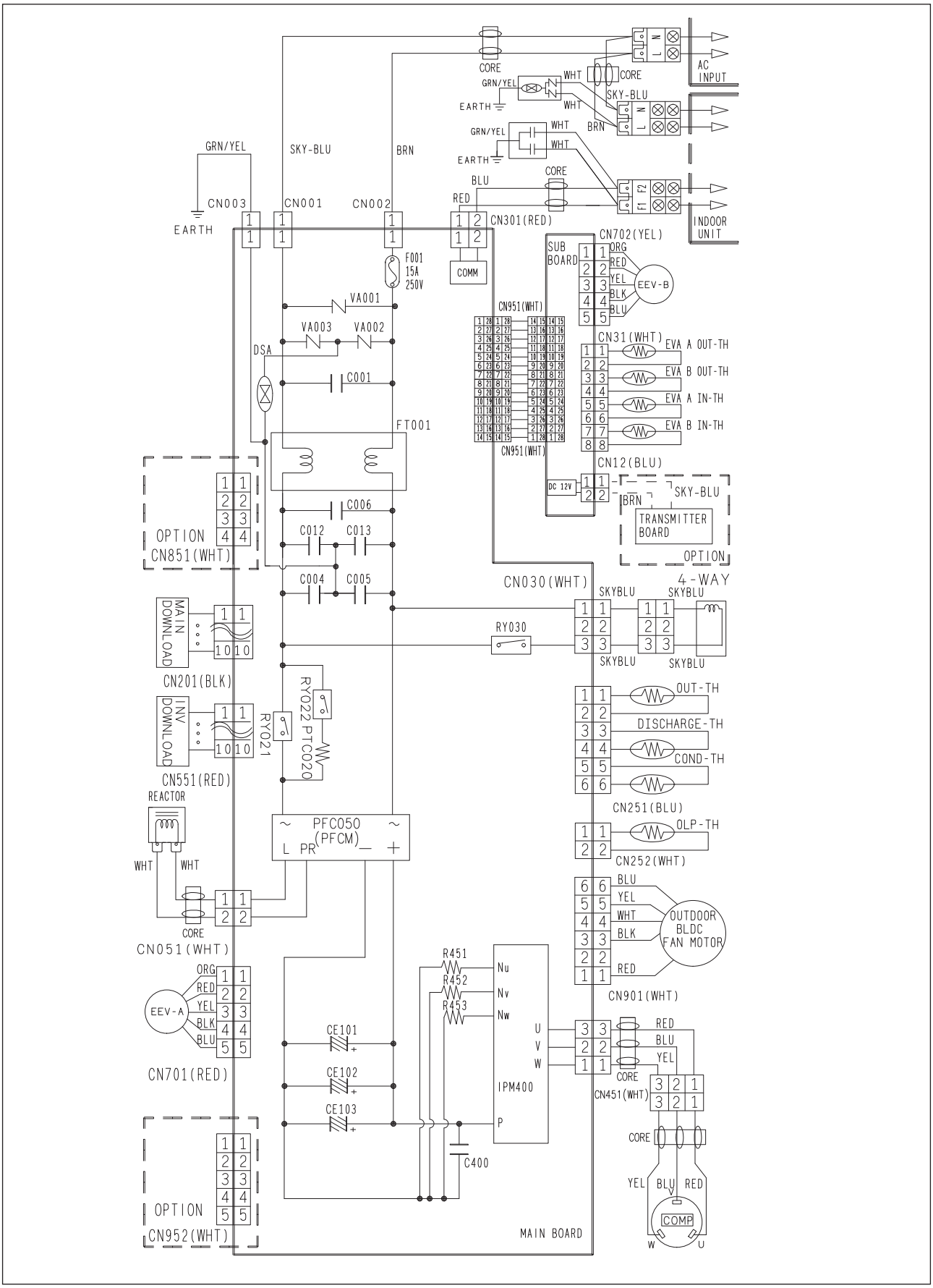

2) AJ052/068FCJ3EH/EU

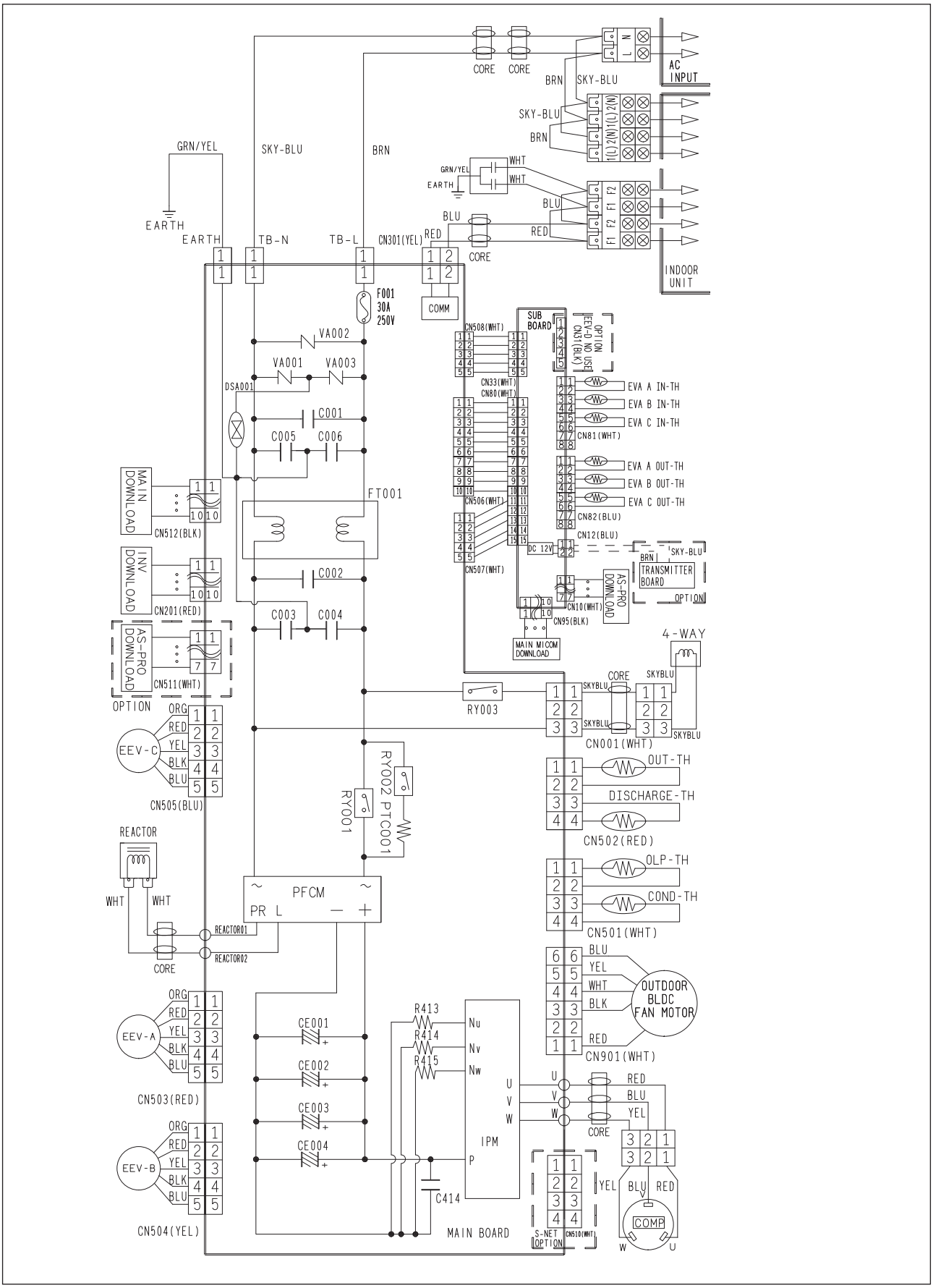

PERFORMANCE

4 Electrical wiring diagram

4-1. Outdoor units

3) AJ070/080FCJ4EH/EU

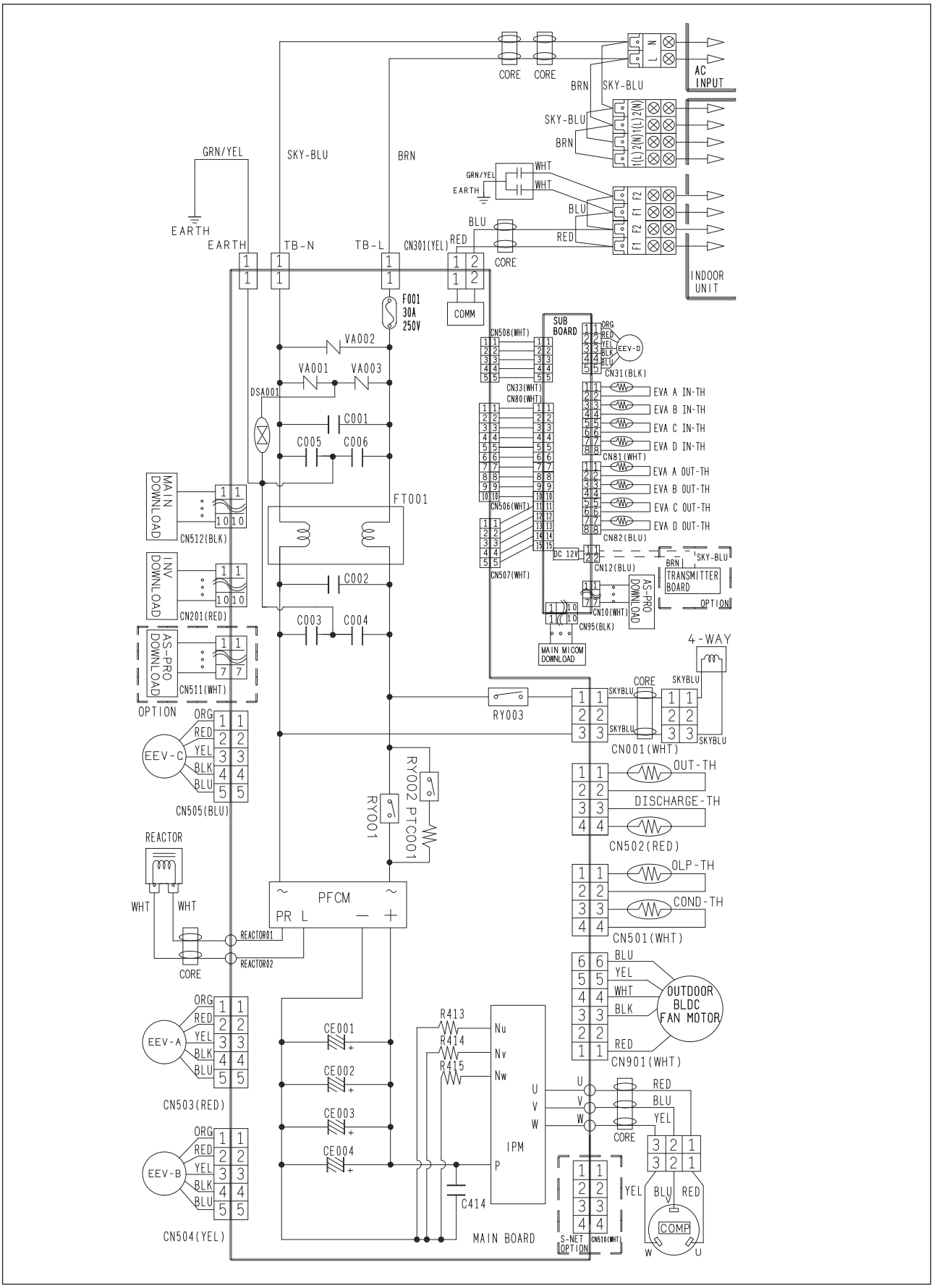

4) AJ100FCJ5EH/EU

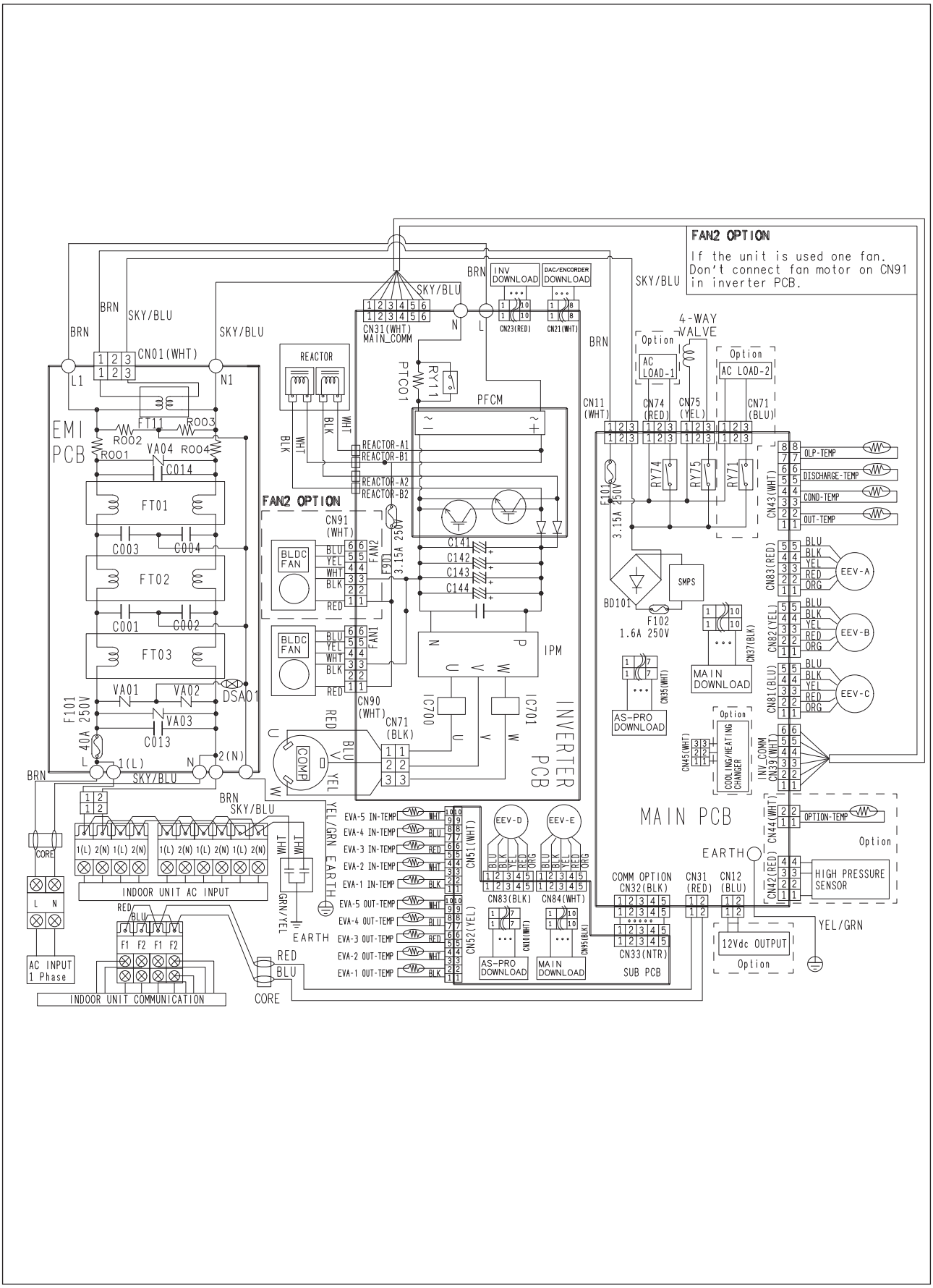

4 Electrical wiring diagram

4-2. Indoor units

1) P-Series (Maldives) - ① AR07/09/12FSFPDGMN

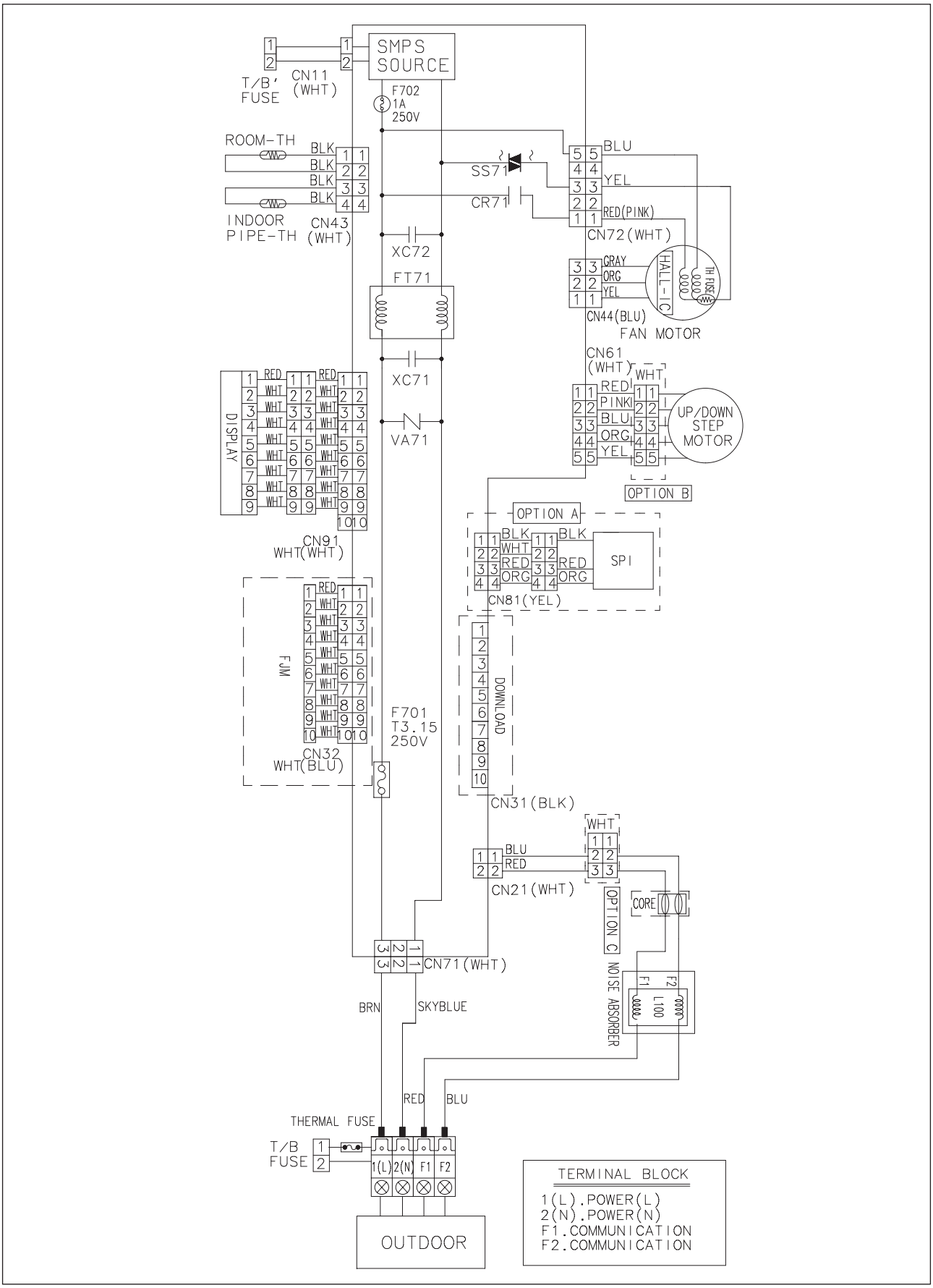

1) P-Series (Maldives) - ② AR18/24FSFPDGMN

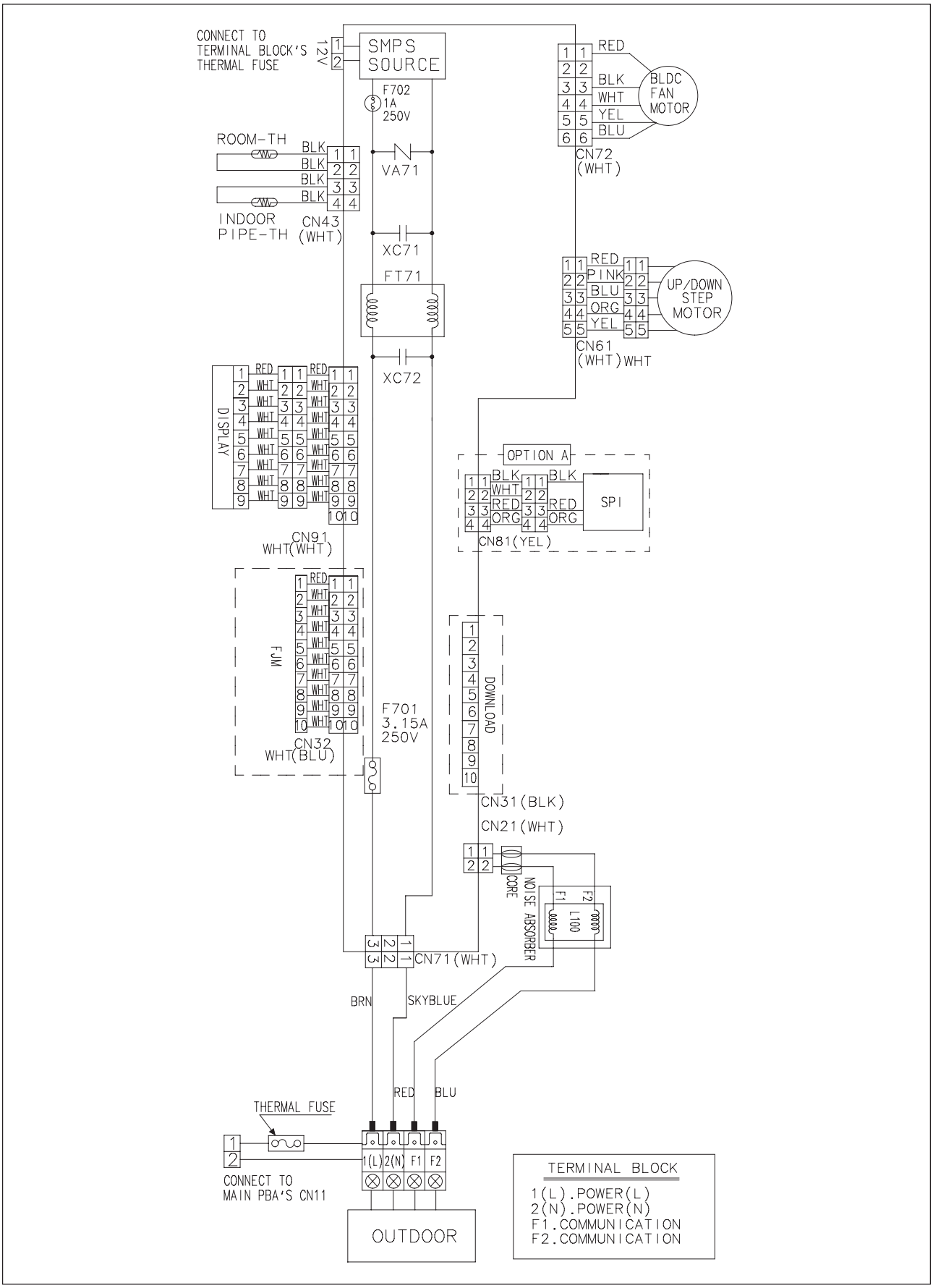

4 Electrical wiring diagram

4-2. Indoor units

2) DELUXE (Maldives++) - ① AR07/09/12FSFPESNN

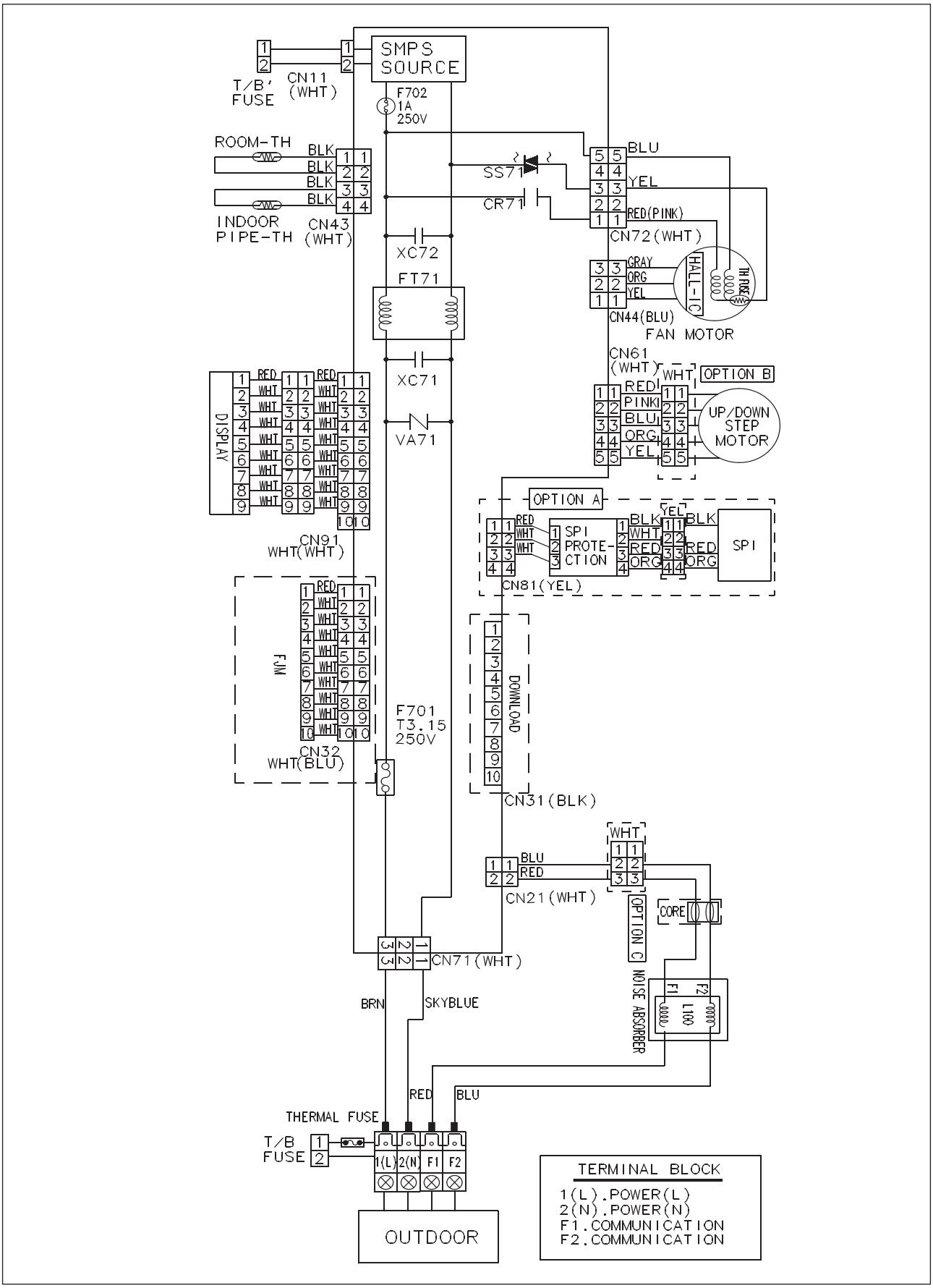

2) DELUXE (Maldives++) - ② AR18/24FSFPESNN

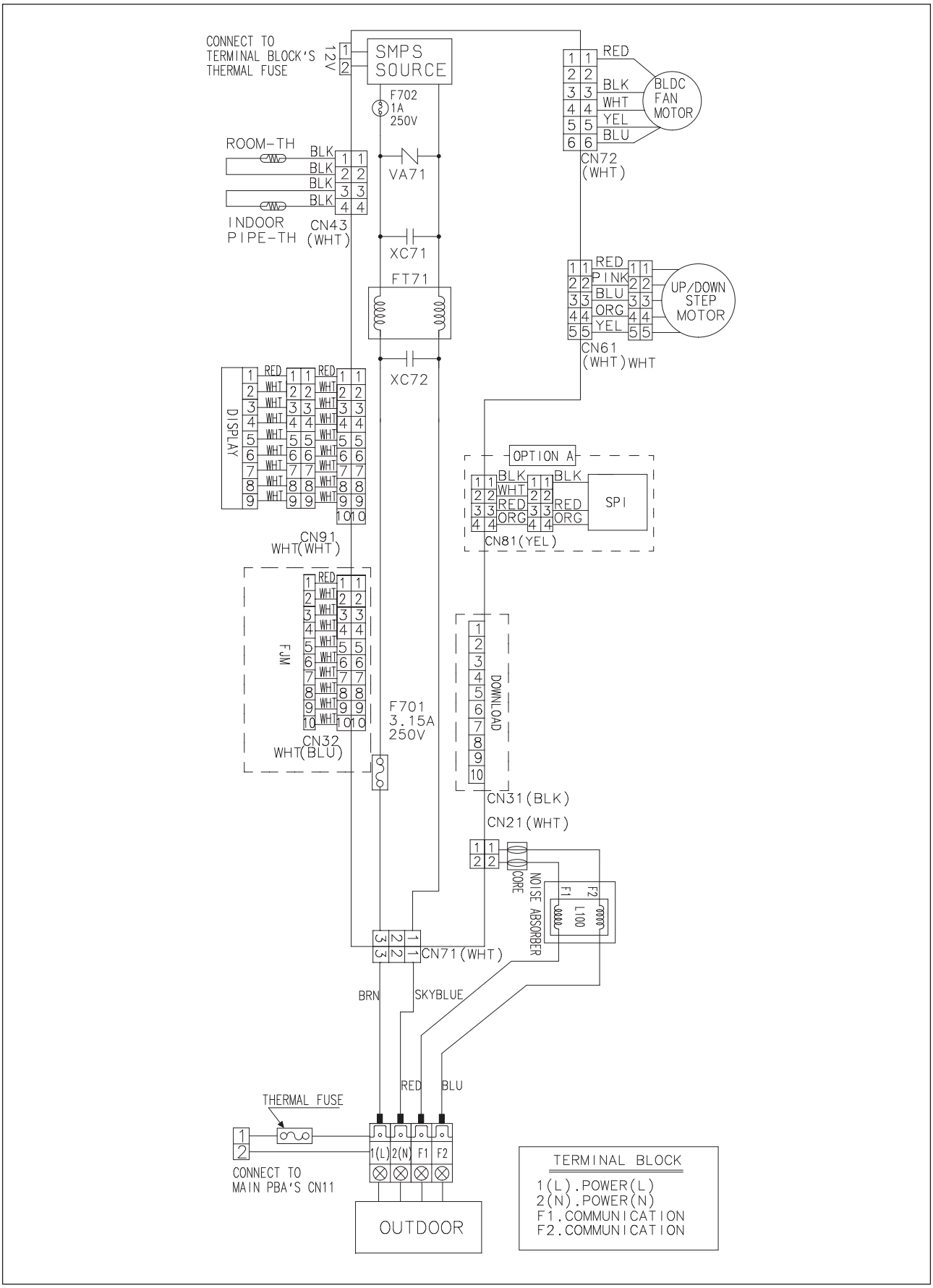

4 Electrical wiring diagram

4-2. Indoor units

3) Neo-Forte - MH020/026/035/052FNEA

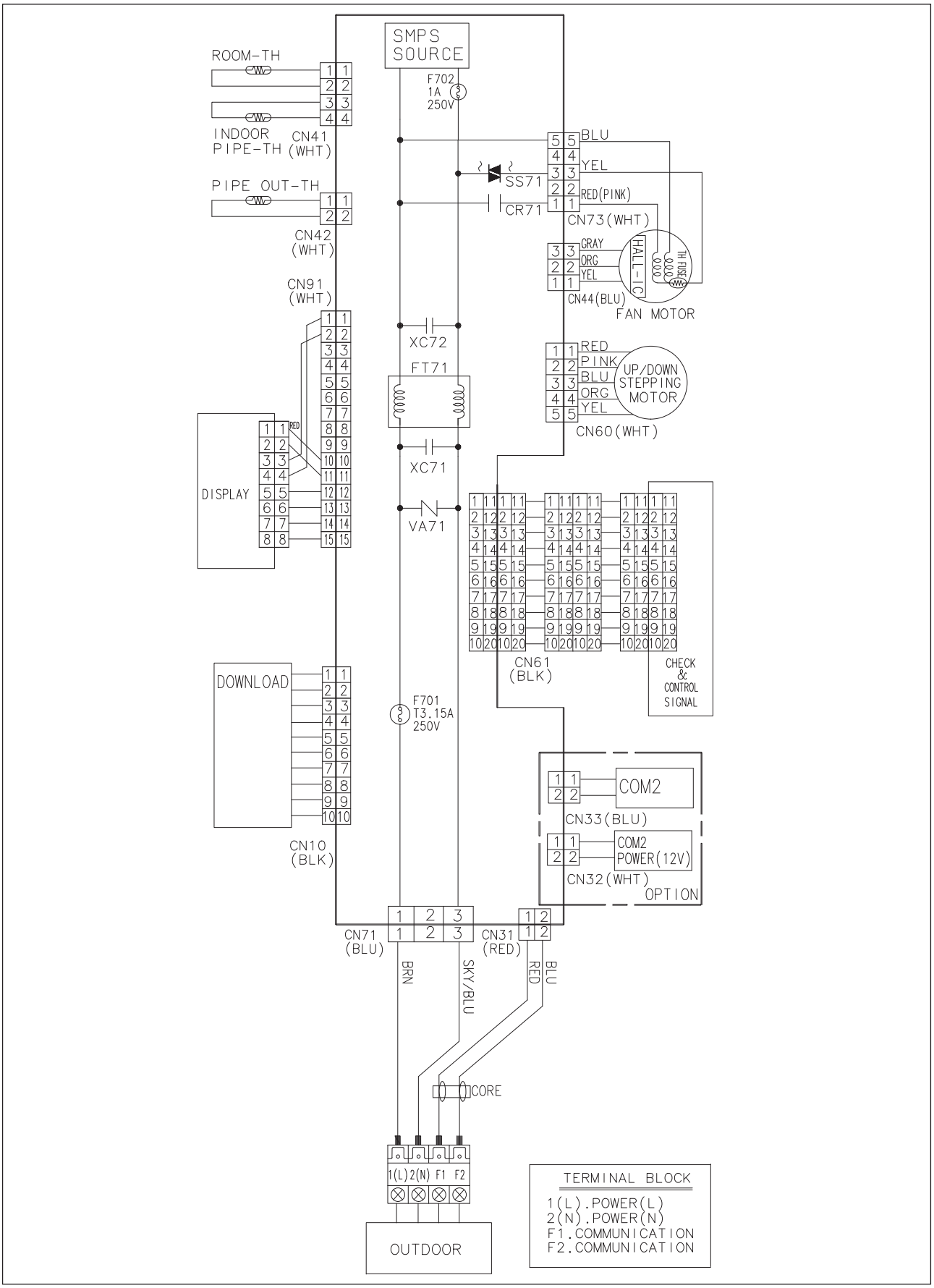

4) Crystal - MH020/026/035/052FAEA

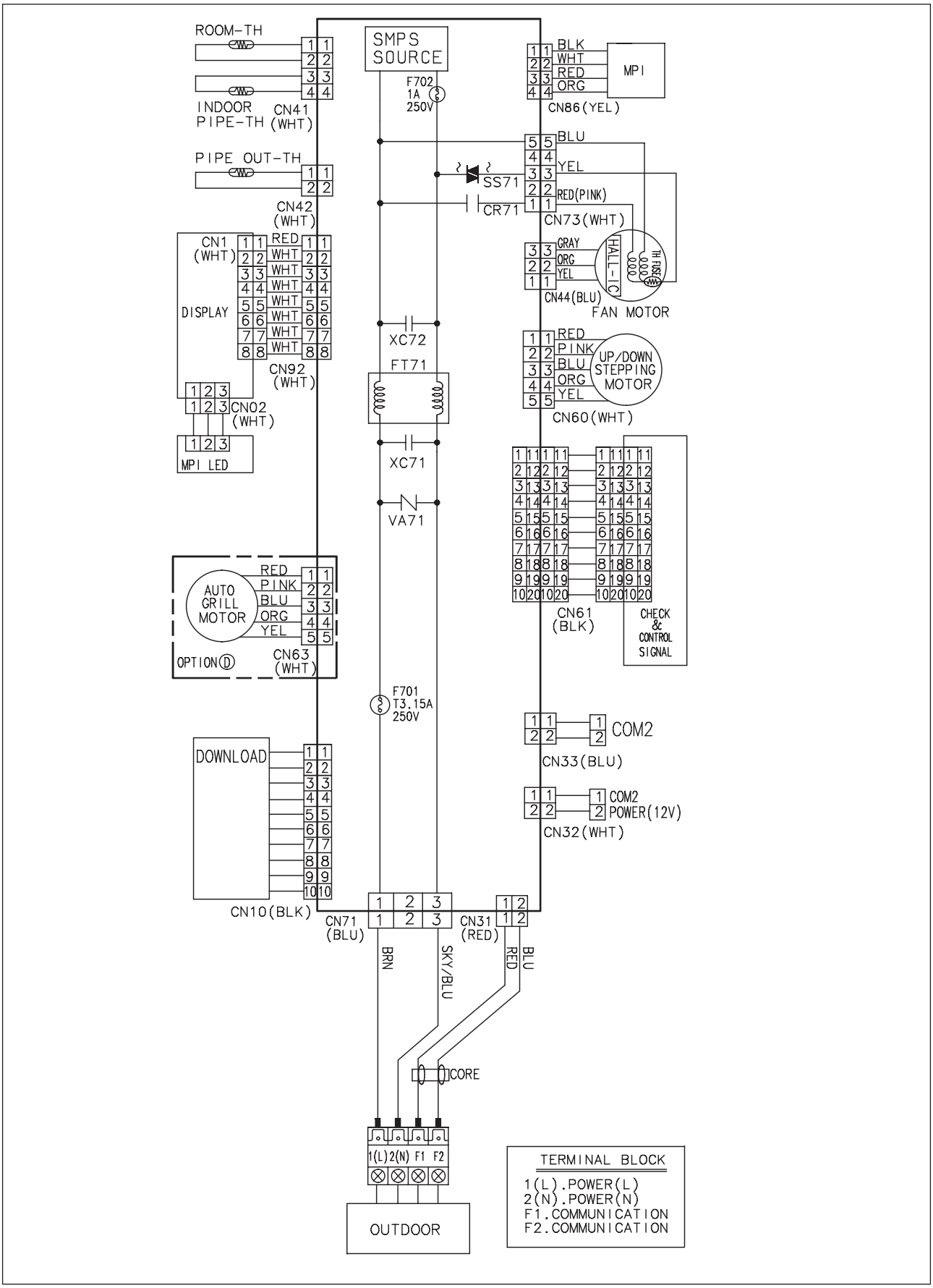

4 Electrical wiring diagram

4-2. Indoor units

5) New Crystal - ① AR09/12/18/24FSSEDWUN

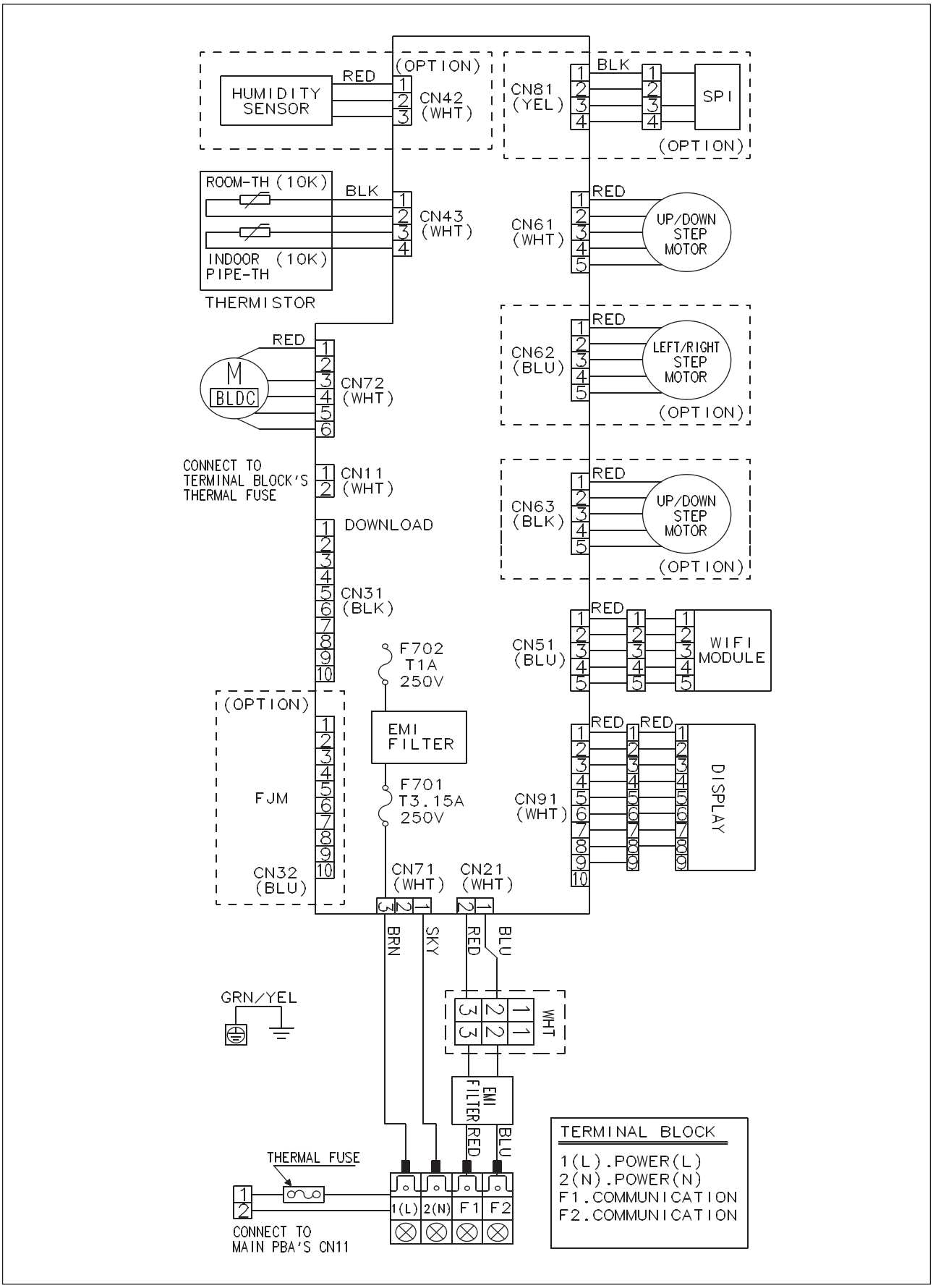

6) Y-Series (Jungfrau Premium) - AR09/12/18FSSYAWTN

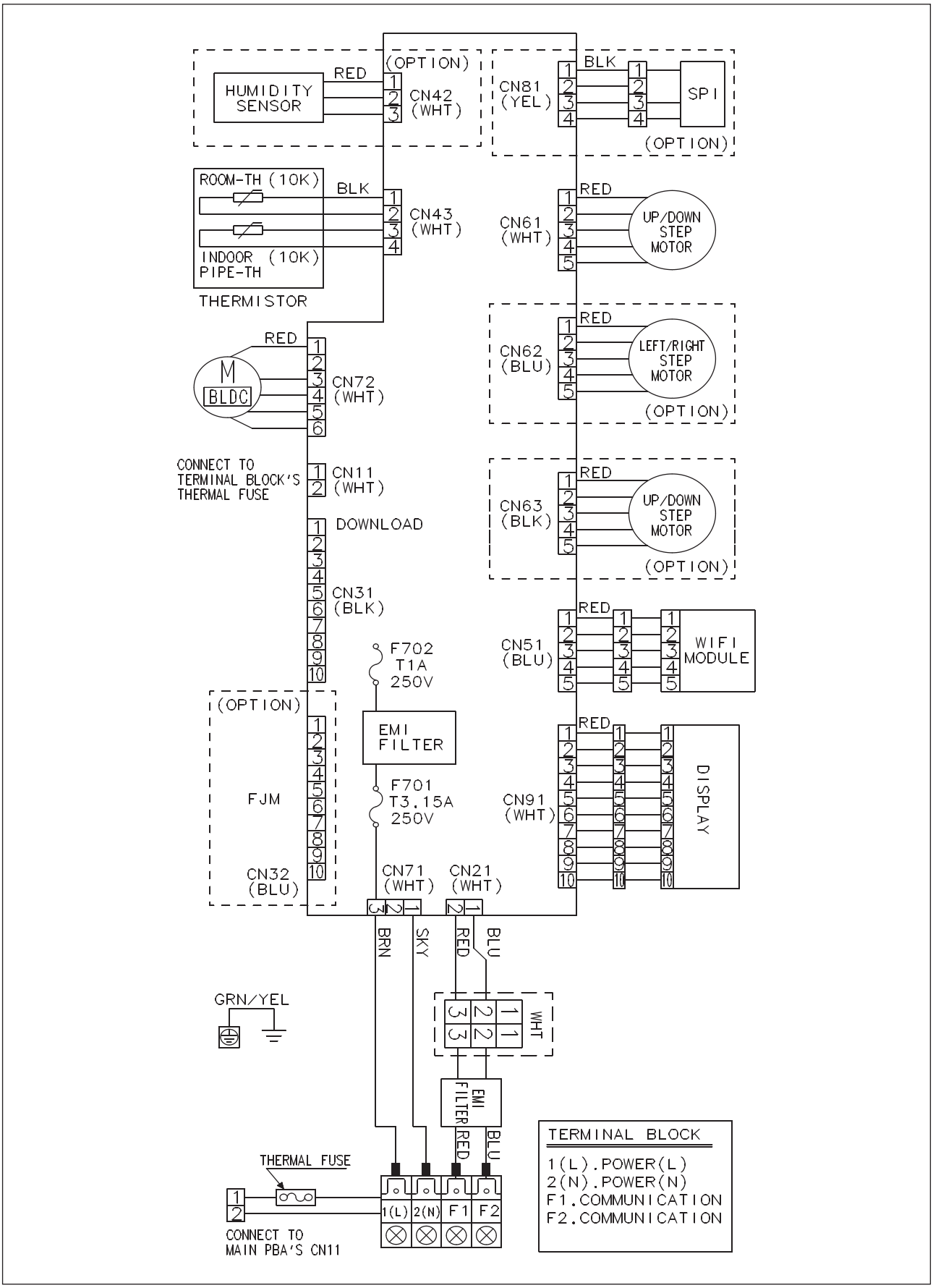

4 Electrical wiring diagram

4-2. Indoor units

7) Slim 1way Cassette - MH026/035FSEA

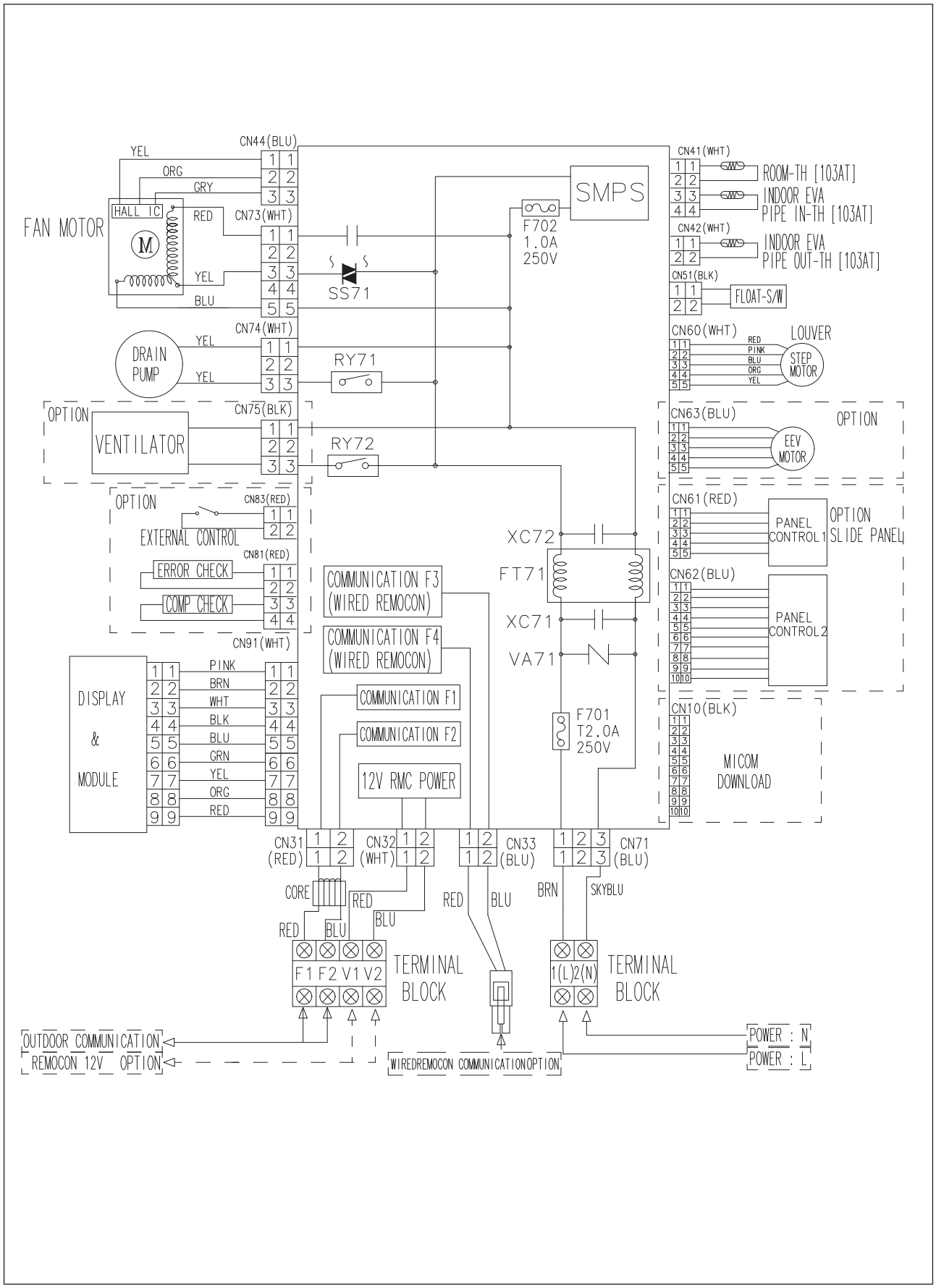

8) Mini 4way Cassette - AJN016/020/025/035/052NDEHA

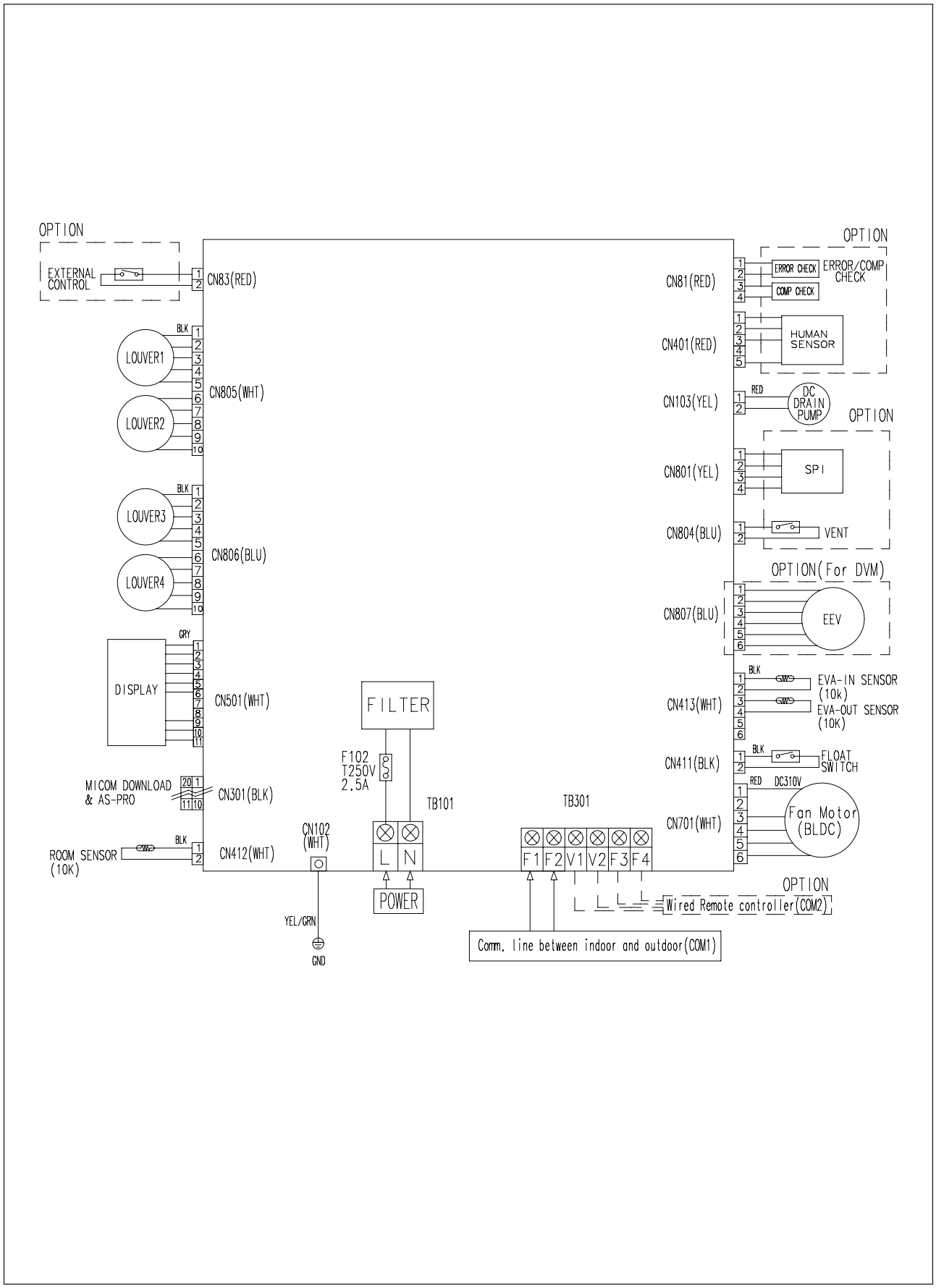

4 Electrical wiring diagram

4-2. Indoor units

9) Slim Duct - NJ026/035LHXEA

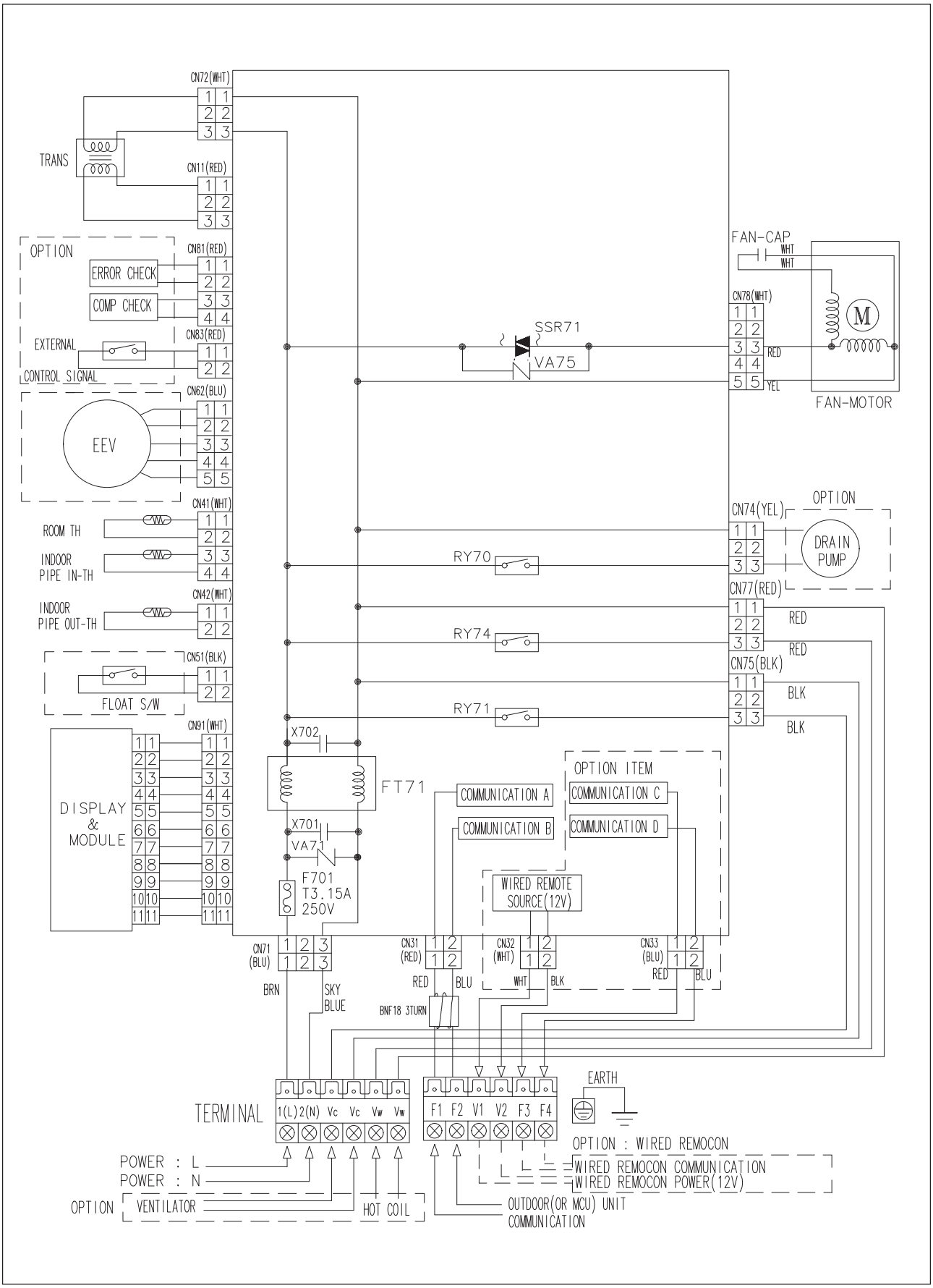

10) MSP Duct - MH052FUEA

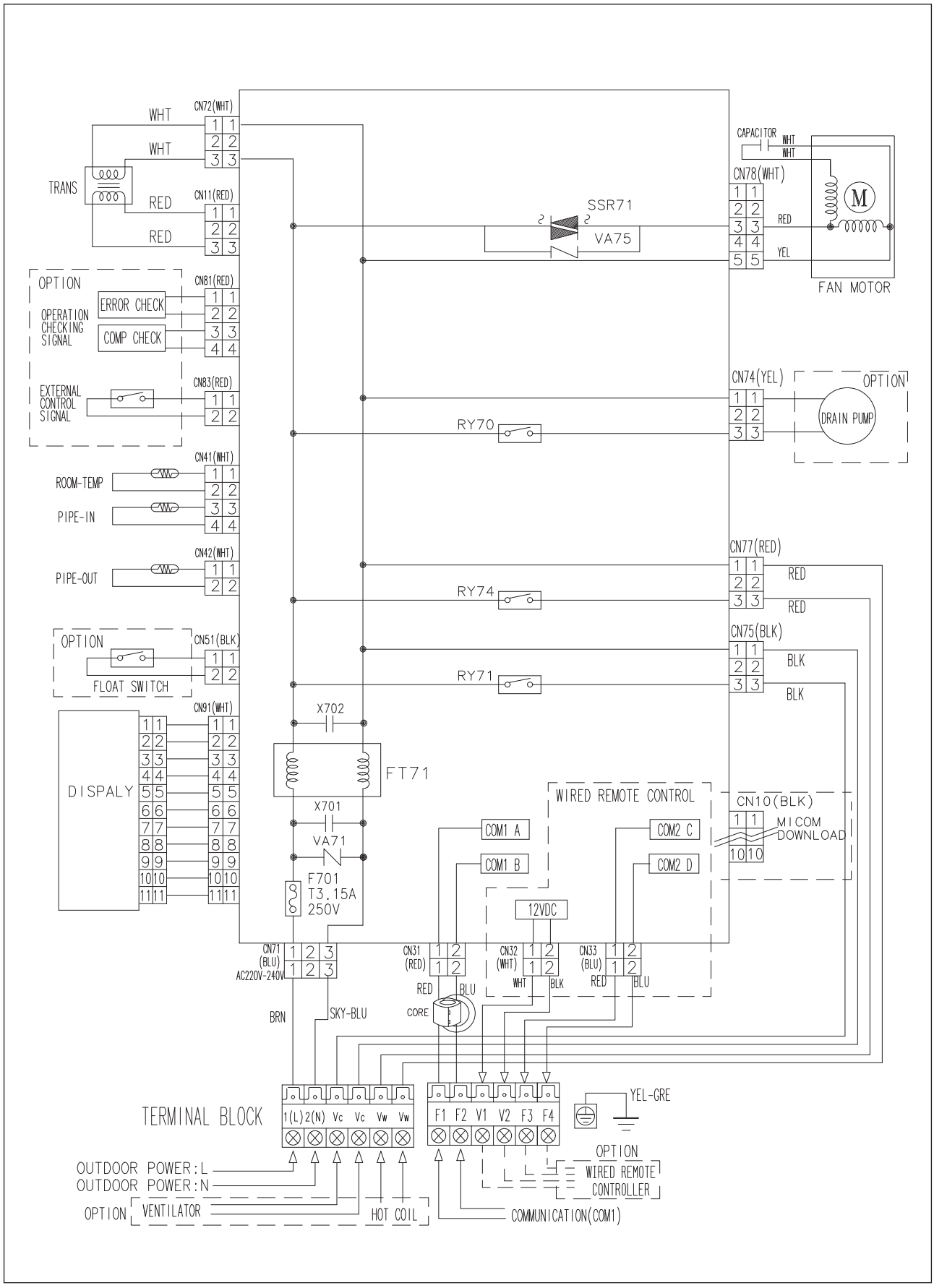

4 Electrical wiring diagram

4-2. Indoor units

11) Console - MH026/035/052FJEA

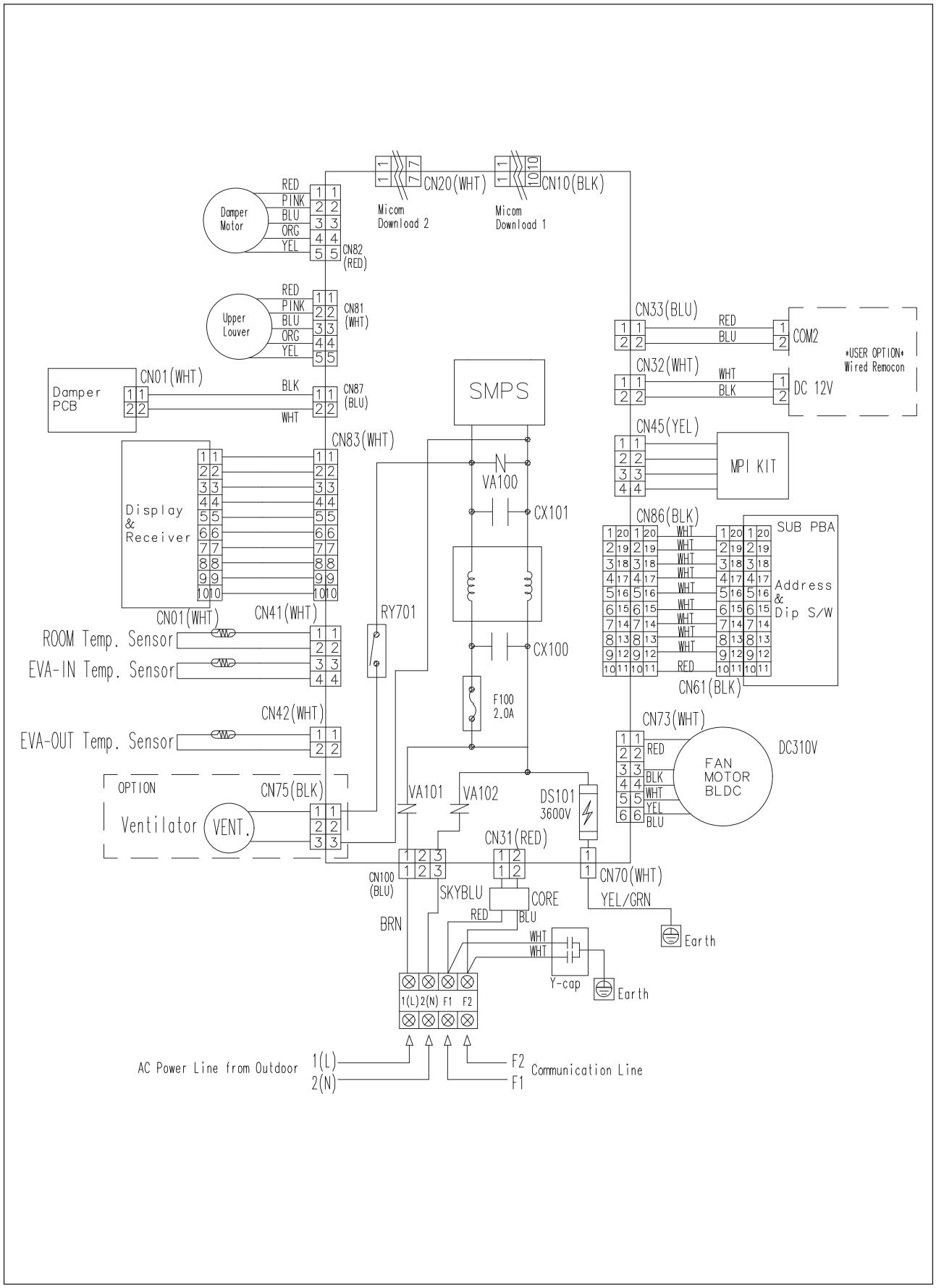

5 Cycle diagram

5-1. AJ040FCJ2EH/EU

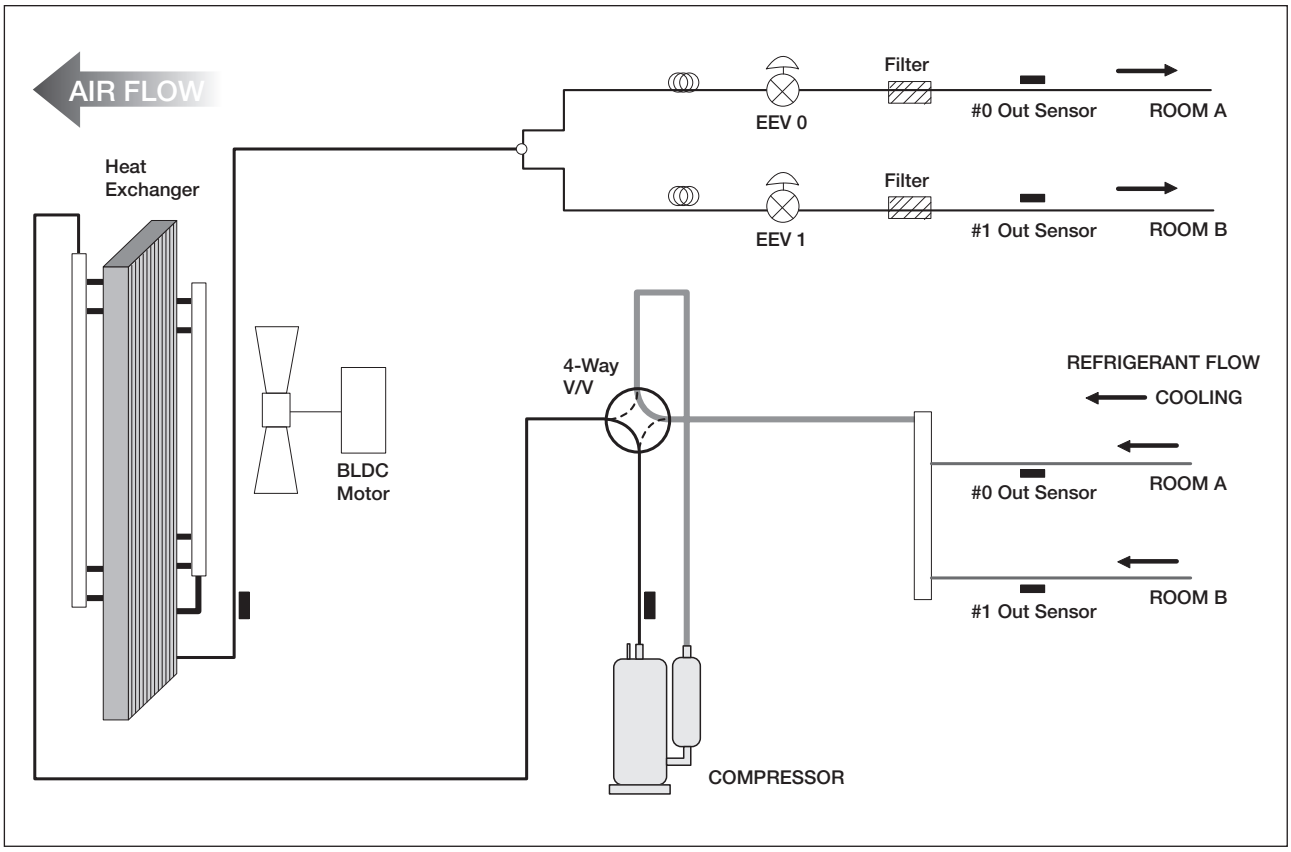

5-2. AJ050FCJ2EH/EU

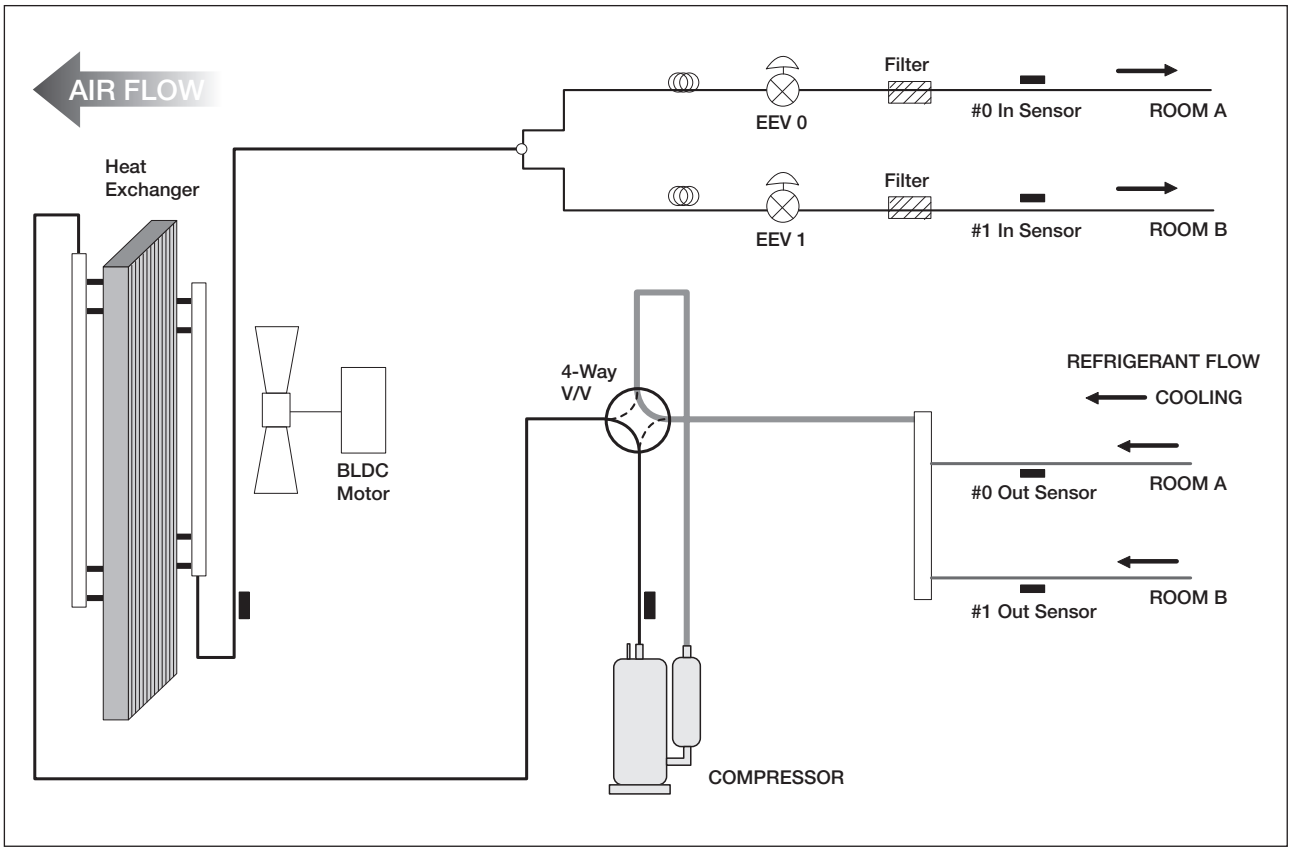

5 Cycle diagram

5-3. AJ052FCJ3EH/EU

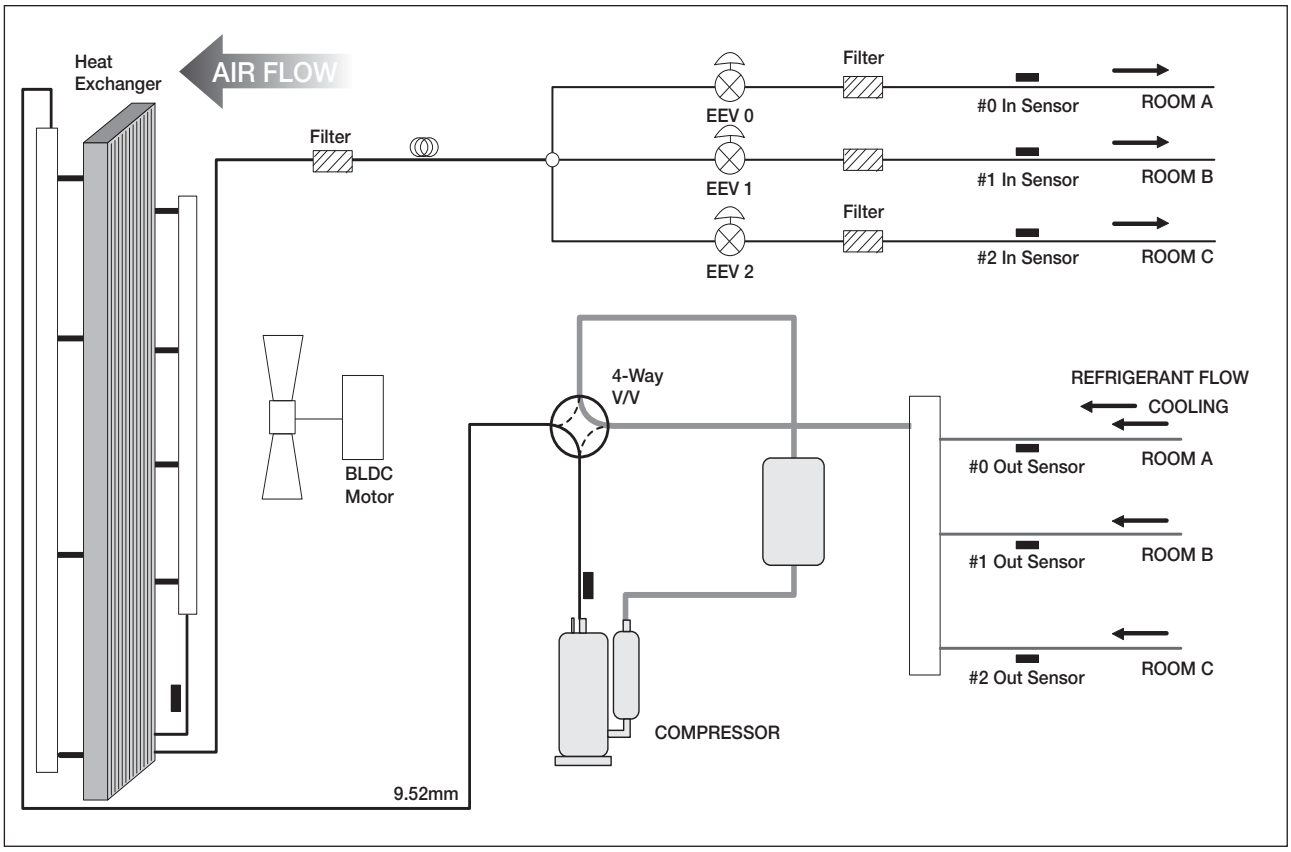

5-4. AJ068FCJ3EH/EU

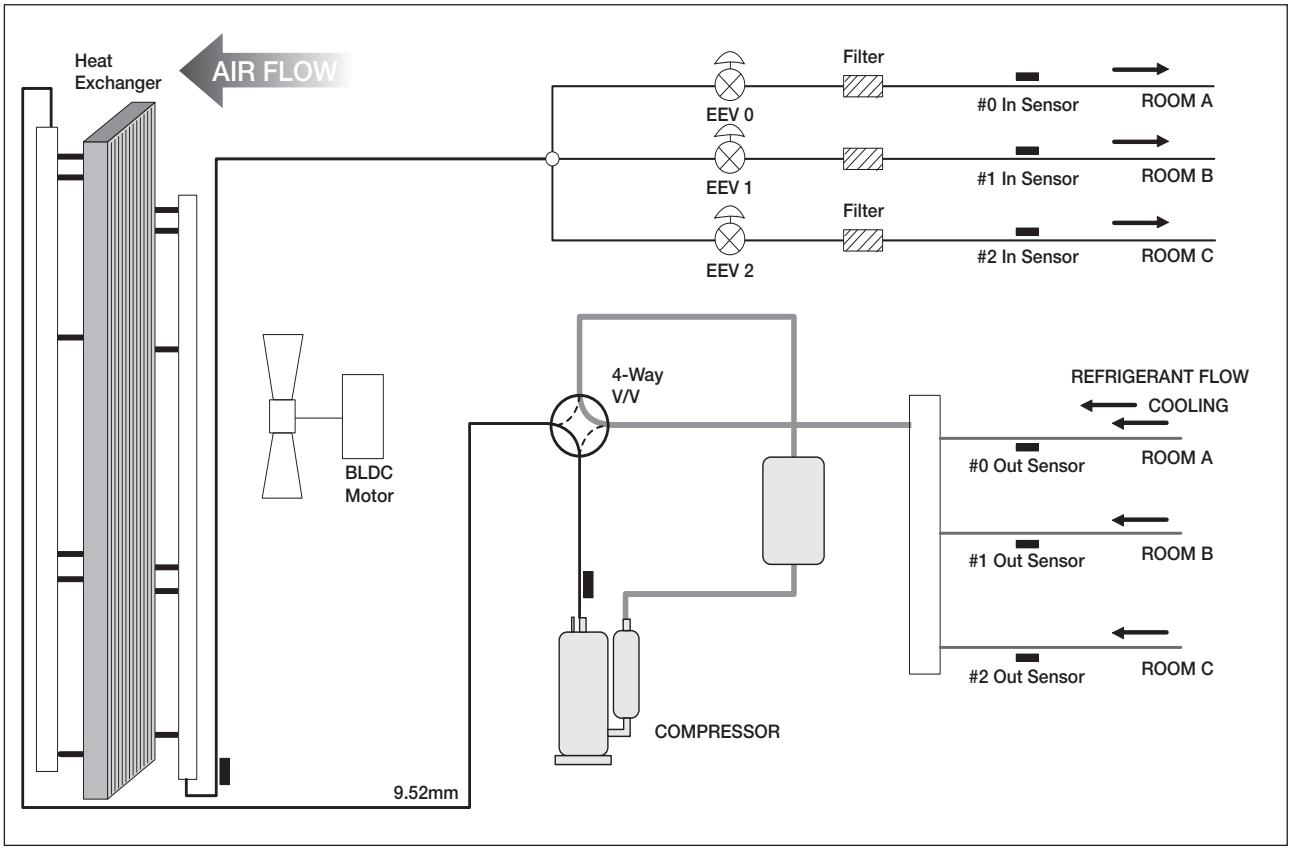

5-5.AJ070/080FCJ4EH/EU

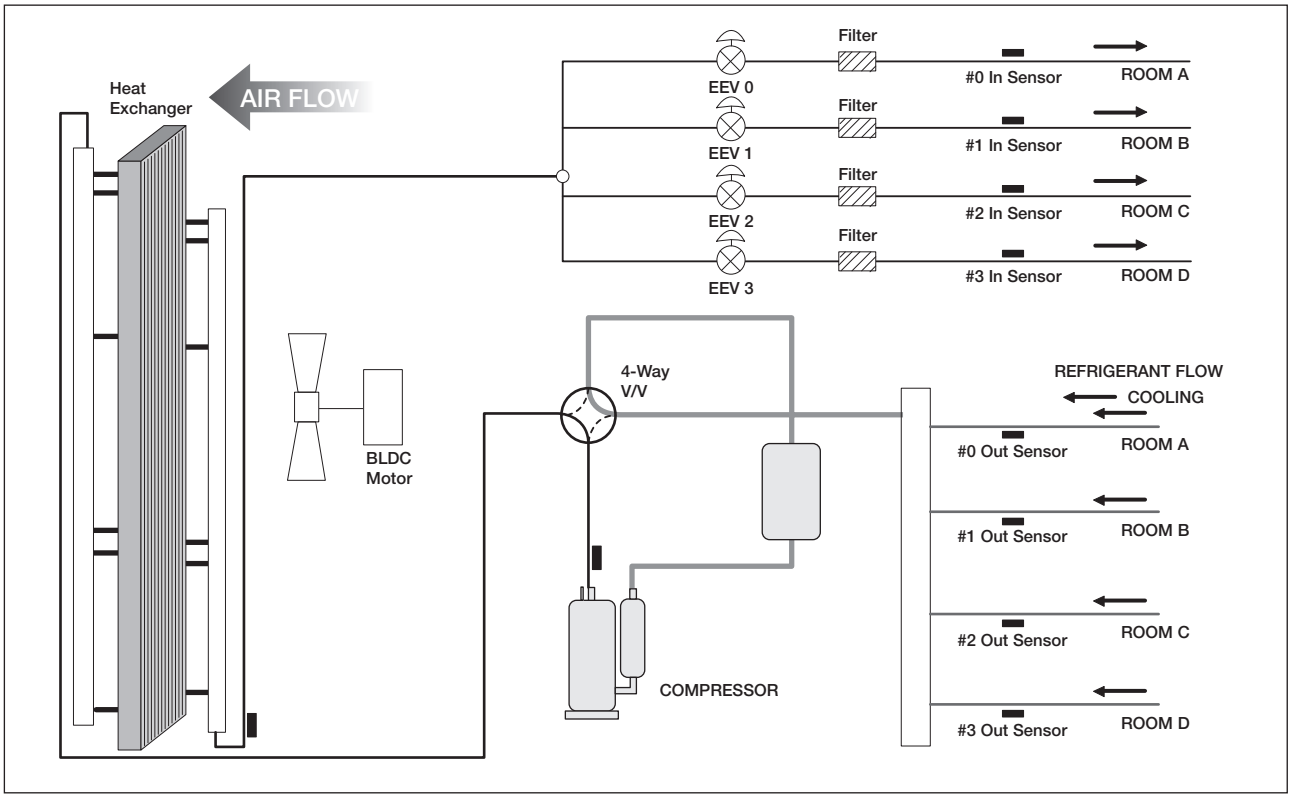

5-6. AJ100FCJ5EH/EU

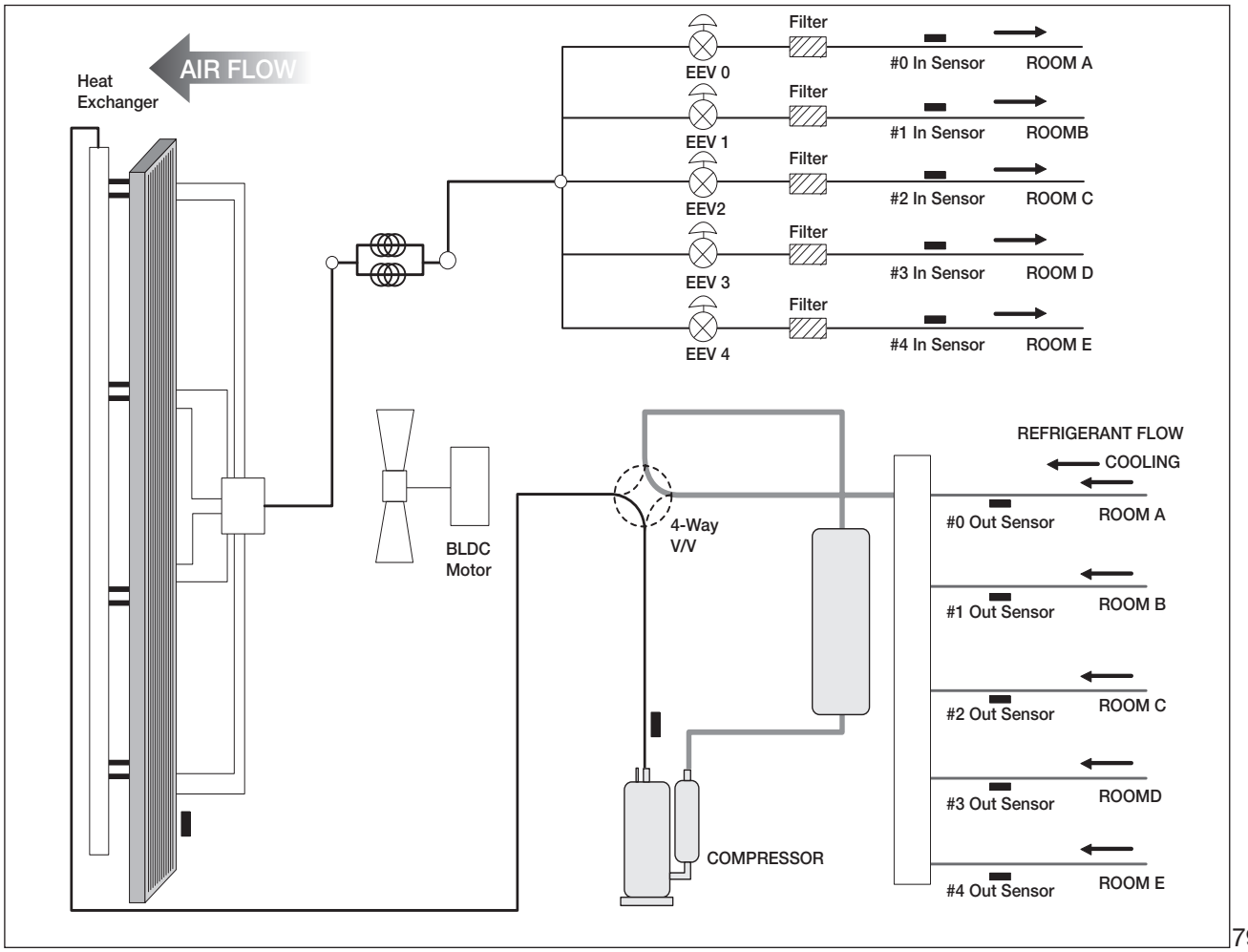

6 Sound pressure level

6-1. Outdoor units

1) Operation sound level

Type	Measuring Location	Model	Cooling
Outdoor Unit	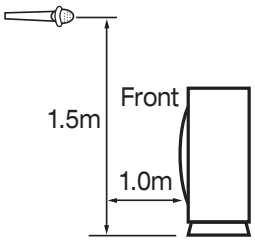	AJ040FCJ2EH/EU	45.0
		AJ050FCJ2EH/EU	46.0
		AJ052FCJ3EH/EU	46.0
		AJ068FCJ3EH/EU	48.0
		AJ070FCJ4EH/EU	48.0
		AJ080FCJ4EH/EU	49.0
		AJ100FCJ5EH/EU	54.0

☑ Note

- These operation values were obtaioned in an anechoic room. Sound pressure level will vary depending on a range of factors such as the construction of the particular room where the equipment is installed.
- Operation sound level may differ depending on operation and ambient conditions.

2) NC Curve

① AJ040FCJ2EH/EU

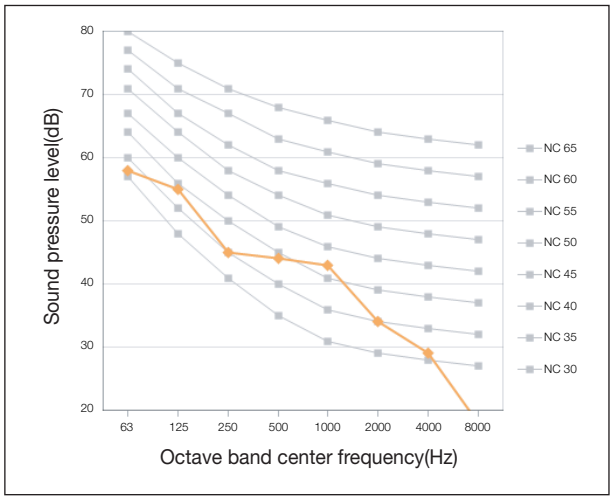

② AJ050FCJ2EH/EU

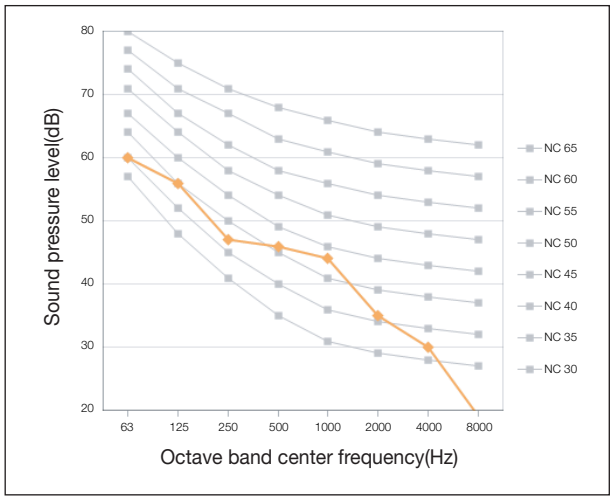

③ AJ052FCJ3EH/EU

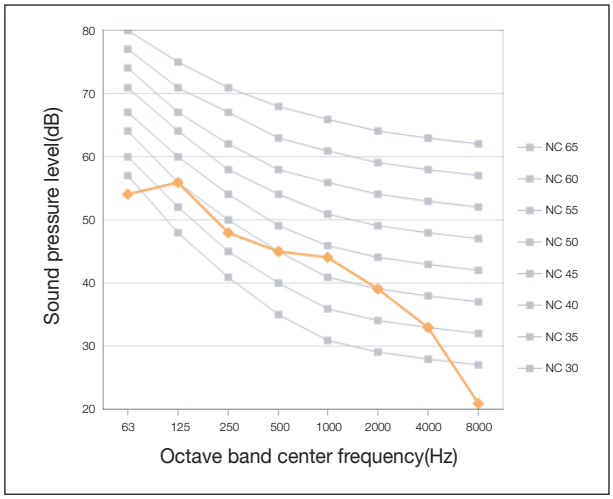

④ AJ068FCJ3EH/EU

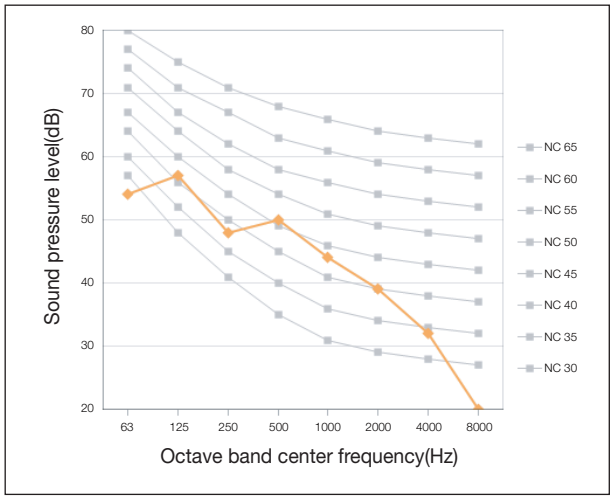

⑤ AJ070FCJ4EH/EU

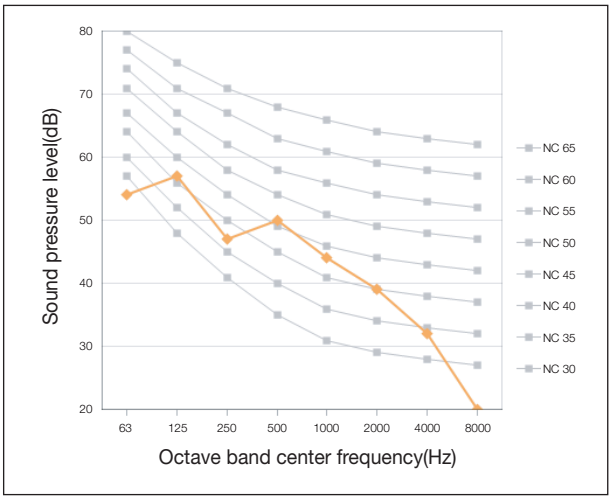

⑥ AJ080FCJ4EH/EU

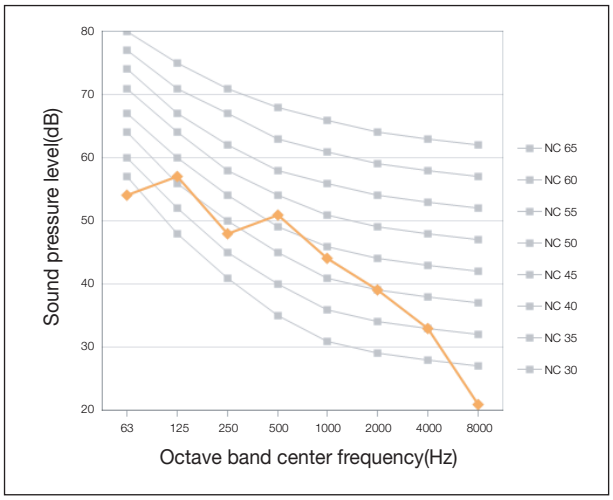

⑦ AJ100FCJ5EH/EU

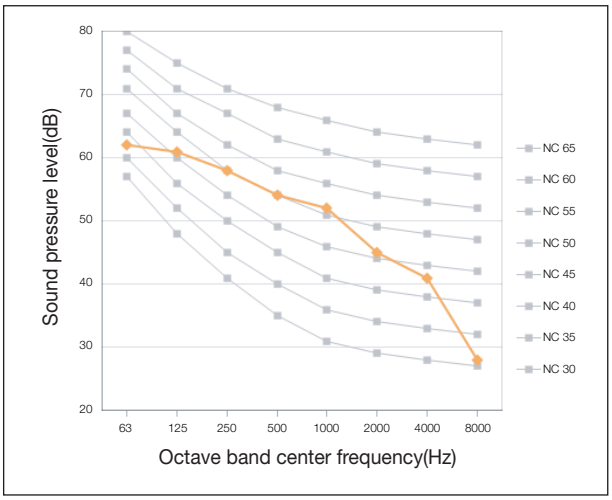

6 Sound pressure level

6-2. Indoor units

1) Operation sound level

Type	Measuring Location	Model	High	Mid	Low	Silence
P-Series (Maldives)	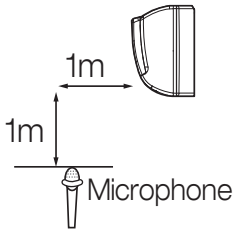	AR07FSFPDGMN	31	28	27	23
		AR09FSFPDGMN	36	34	30	22
		AR12FSFPDGMN	37	34	30	22
		AR18FSFPDGMN	40	37	34	27
		AR24FSFPDGMN	44	39	35	29
DELUXE (Maldives++)		AR07FSFPESNN	31	28	27	23
		AR09FSFPESNN	37	34	31	24
		AR12FSFPESNN	39	35	31	24
		AR18FSFPESNN	41	37	34	27
		AR24FSFPESNN	44	39	35	29
Crystal		MH020FAEA	31	26	21	-
		MH026FAEA	31	26	21	-
		MH035FAEA	35	28	21	-
		MH052FAEA	40	35	30	-
New Crystal		AR09FSSEDWUN	37	33	29	22
		AR12FSSEDWUN	40	35	30	23
		AR18FSSEDWUN	42	38	35	28
		AR24FSSEDWUN	44	39	35	29
Neo-Forte		MH020FNEA	32	28	23	-
		MH026FNEA	32	28	23	-
		MH035FNEA	36	30	23	-
		MH052FNEA	40	35	30	-
Y Series(Jungfrau)		AR09FSSYAWTN	39	33	27	20
		AR12FSSYAWTN	41	35	28	21
		AR18FSSYAWTN	43	38	33	27
1way Cassette	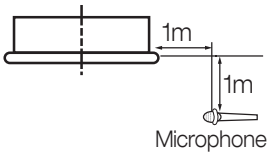	MH026FSEA	30	28	25	-
		MH035FSEA	32	30	27	-
Mini 4way Cassette	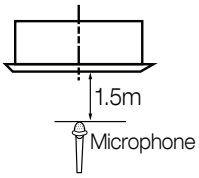	AJN016NDEHA	33	29	24	-
		AJN020NDEHA	33	29	24	-
		AJN026NDEHA	34	30	25	-
		AJN035NDEHA	36	33	29	-
		AJN052NDEHA	40	36	32	-
Slim Duct	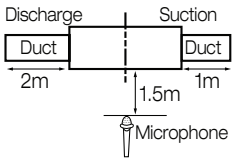	NJ026LHXEA	30	28	25	-
		NJ035LHXEA	32	30	27	-
MSP Duct		MH052FUEA	37	35	33	-
Console	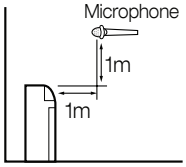	MH026FJEA	28	26	23	-
		MH035FJEA	39	32	24	-
		MH052FJEA	44	34	25	-

2) NC Curve

① AR07FSFPDGMN

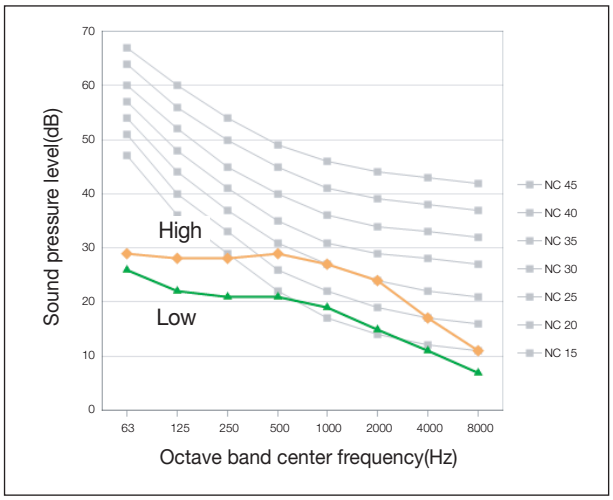

② AR09FSFPDGMN

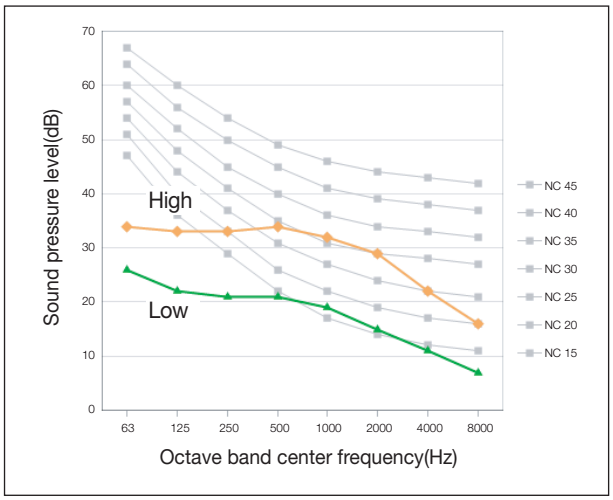

③ AR12FSFPDGMN

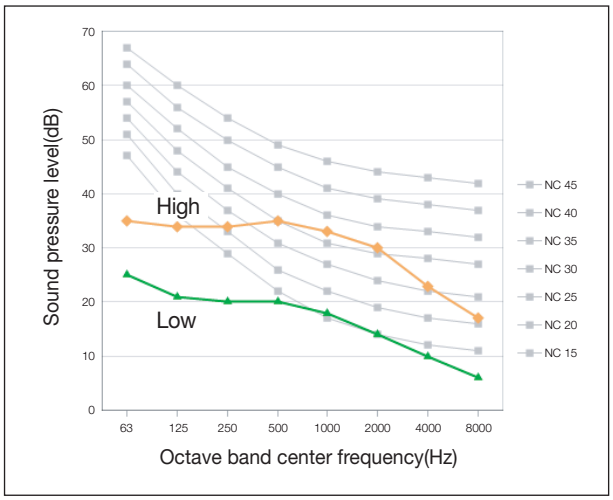

④ AR18FSFPDGMN

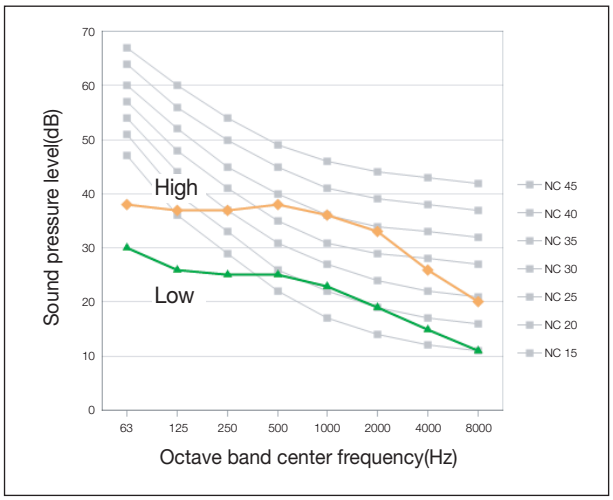

⑤ AR24FSFPDGMN

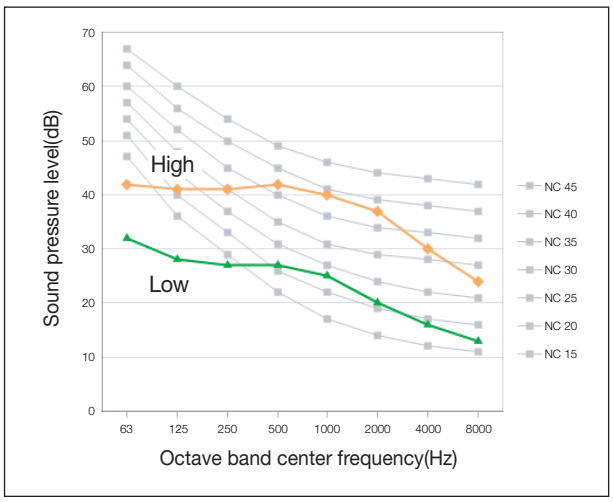

⑥ MH020FAEA

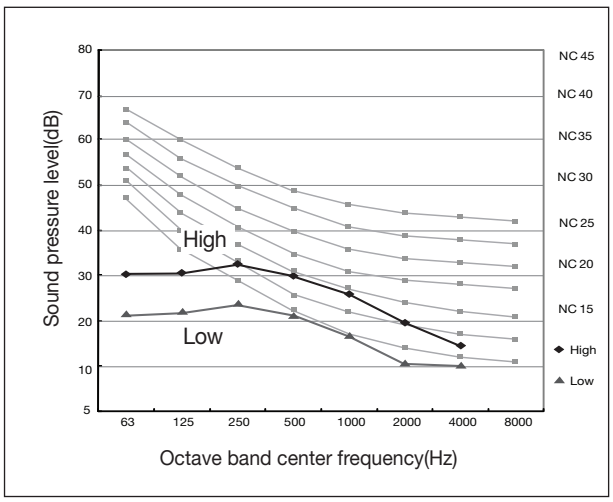

6 Sound pressure level

6-2. Indoor units

2) NC Curve

⑦ MH026FAEA

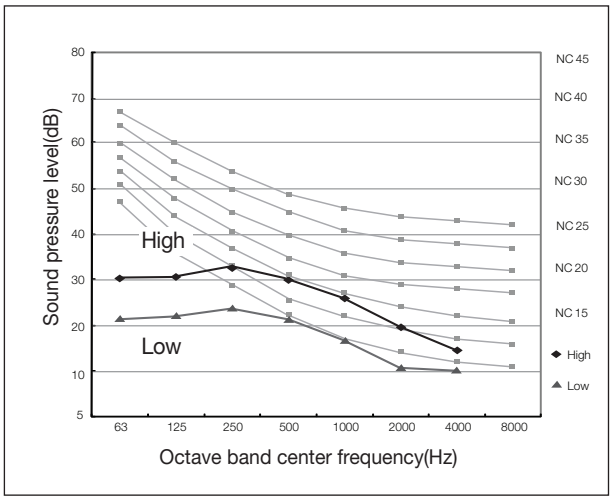

⑧ MH035FAEA

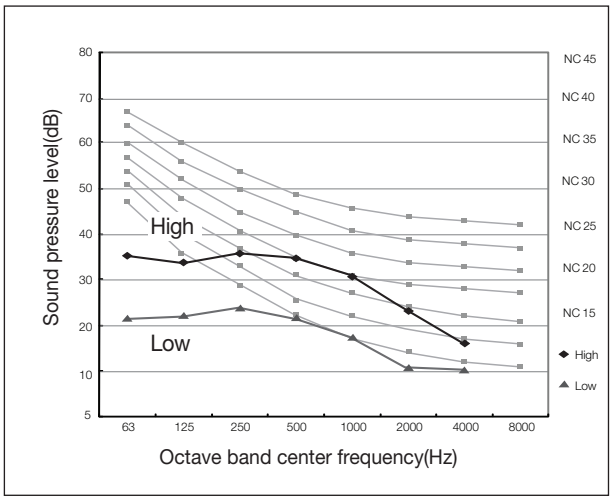

⑨ MH052FAEA

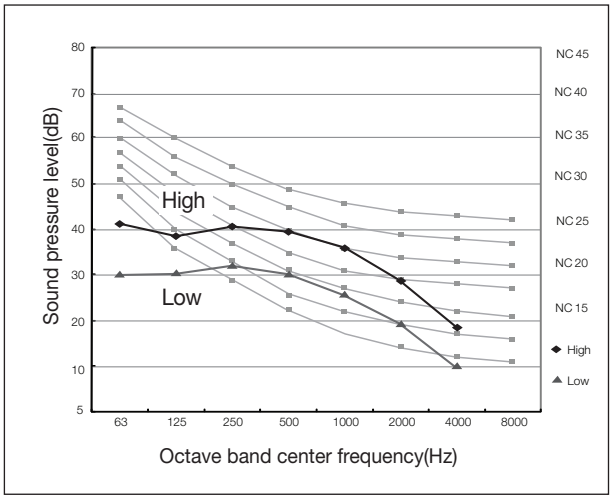

⑩ MH020FNEA

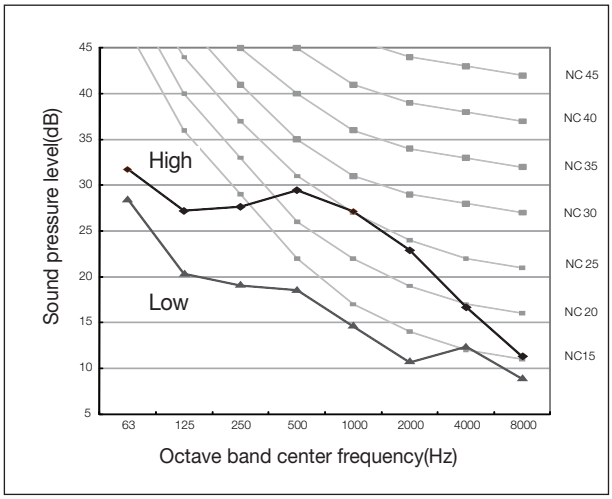

⑪ MH026FNEA

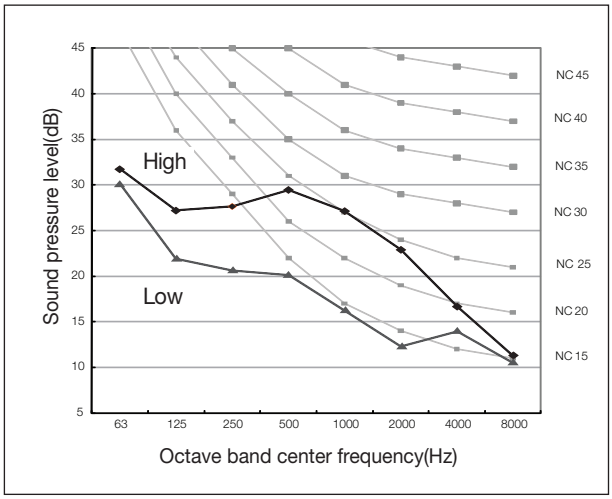

⑫ MH035FNEA

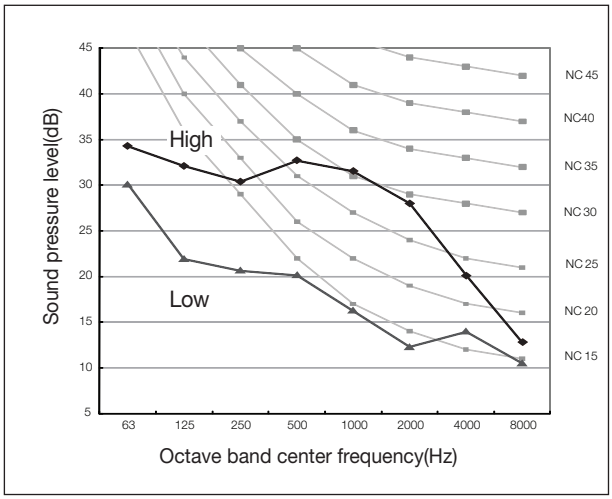

2) NC Curve

⑬ MH052FNEA

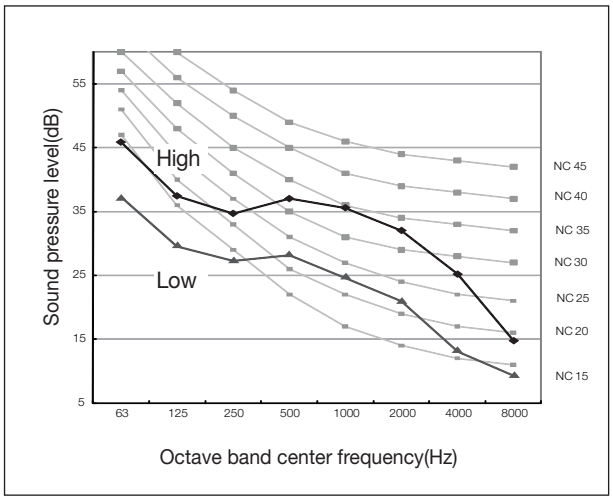

⑭ MH026FSEA

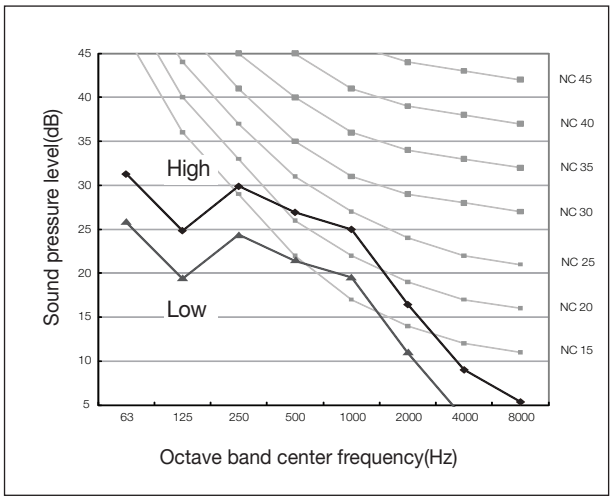

⑮ MH035FSEA

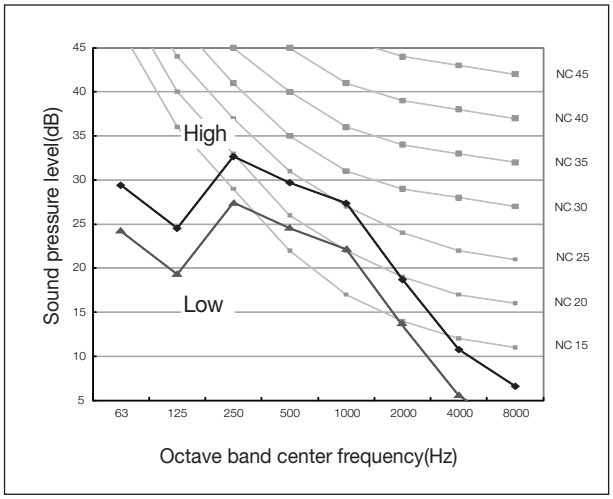

⑯ AJN016NDEHA

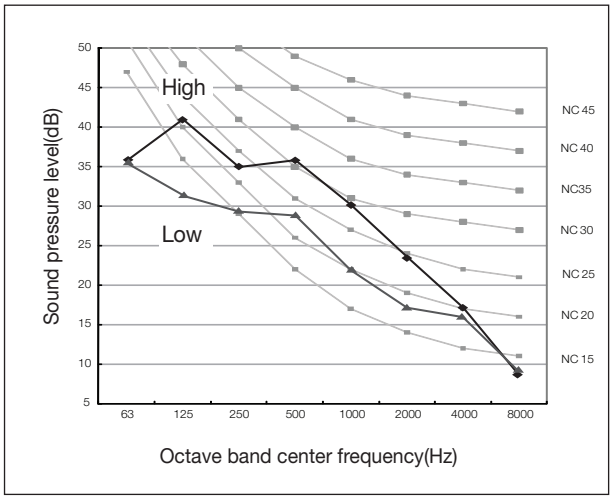

⑰ AJN020NDEHA

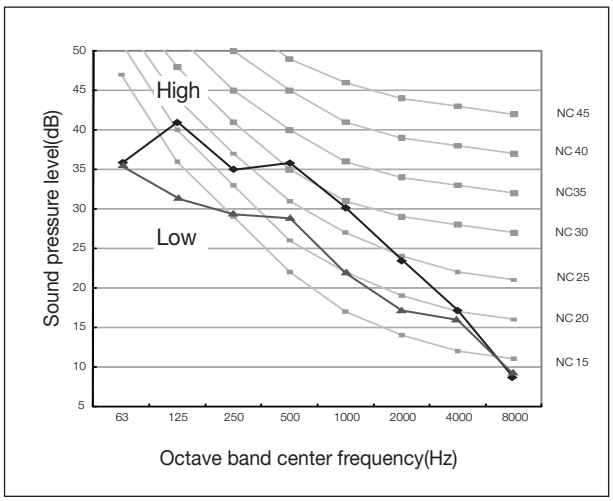

⑱ AJN026NDEHA

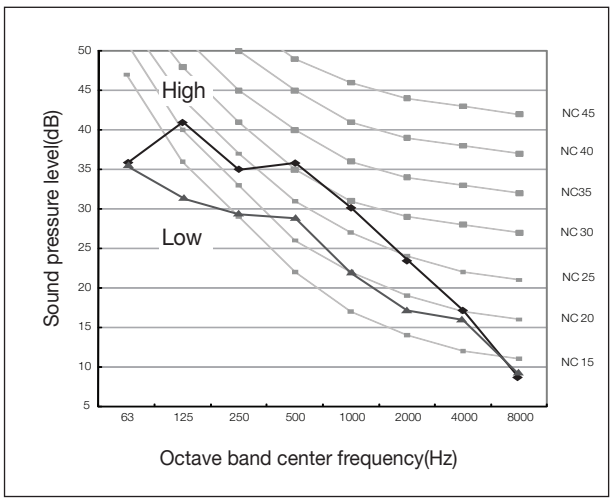

6 Sound pressure level

6-2. Indoor units

2) NC Curve

⑲ AJN035NDEHA

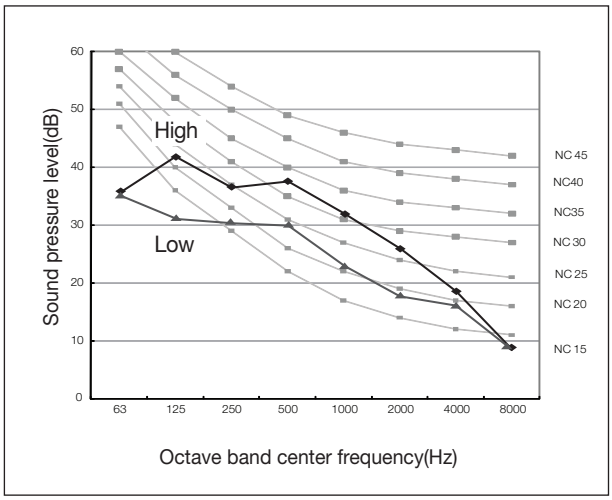

⑳ AJN052NDEHA

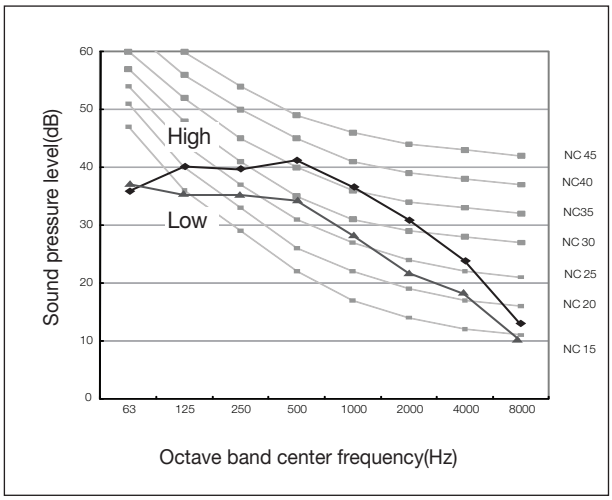

㉑ NJ026LHXEA

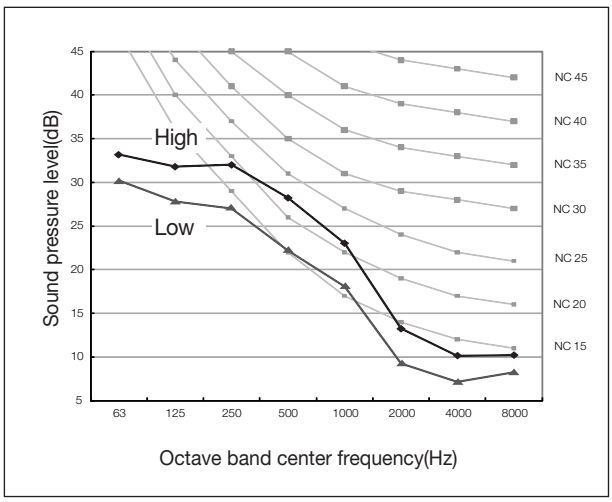

㉒ NJ035LHXEA

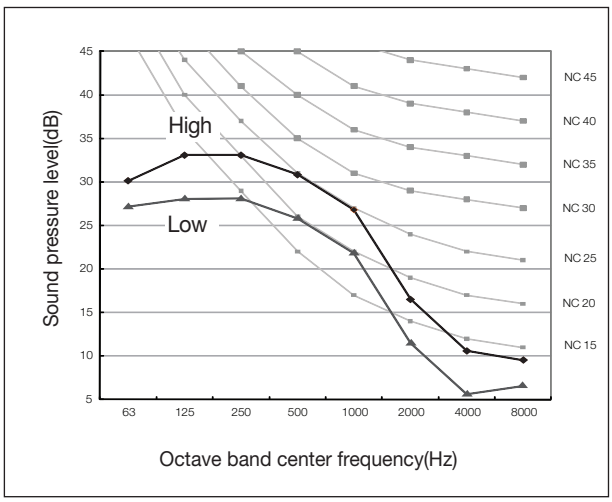

㉓ MH052FUEA

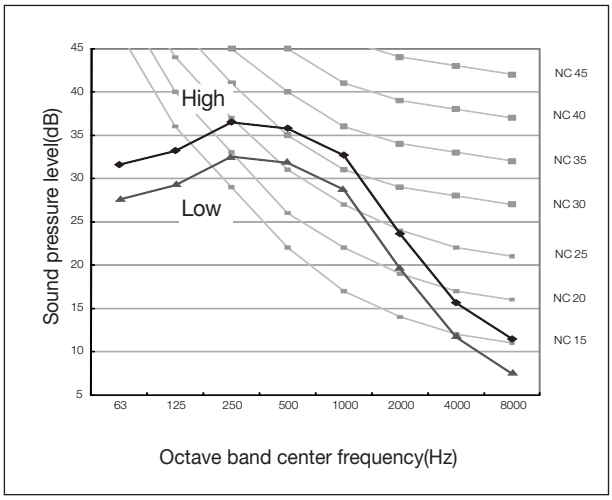

㉔ MH026FJEA

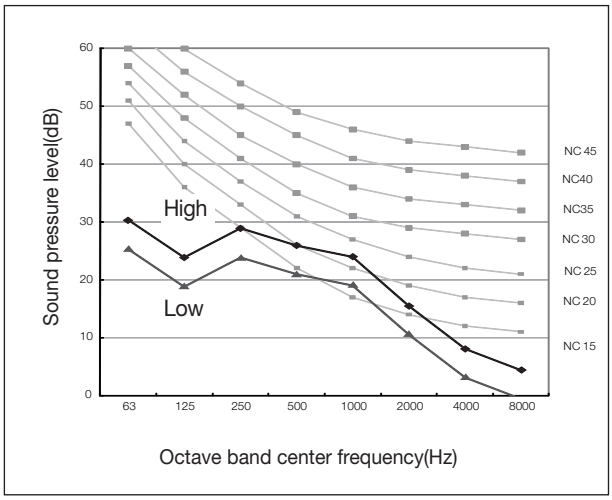

2) NC Curve

㉕ MH035FJEA

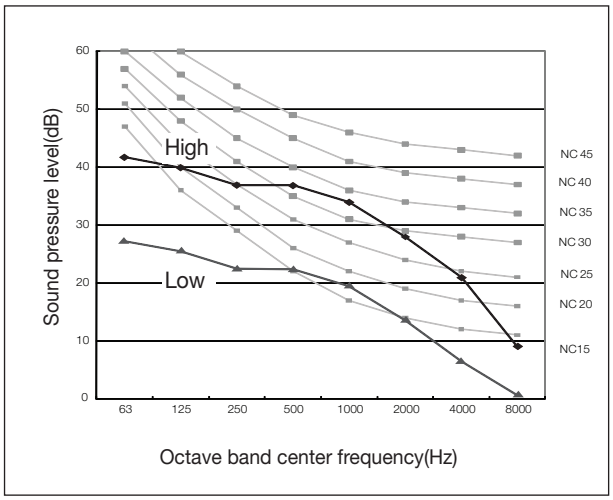

㉖ MH052FJEA

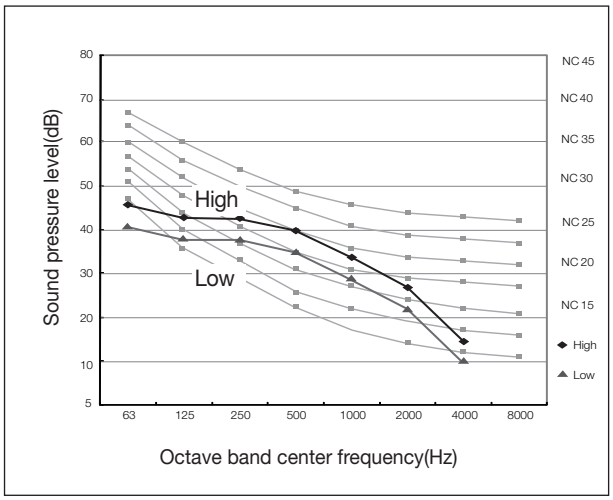

㉗ AR09FSSYAWTN

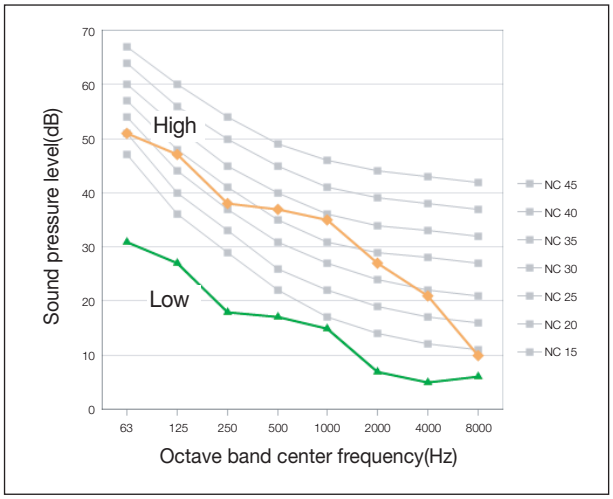

㉘ AR12FSSYAWTN

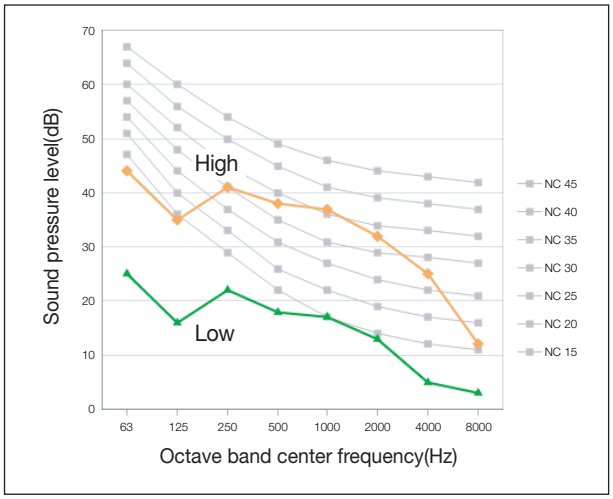

㉙ AR18FSSYAWTN

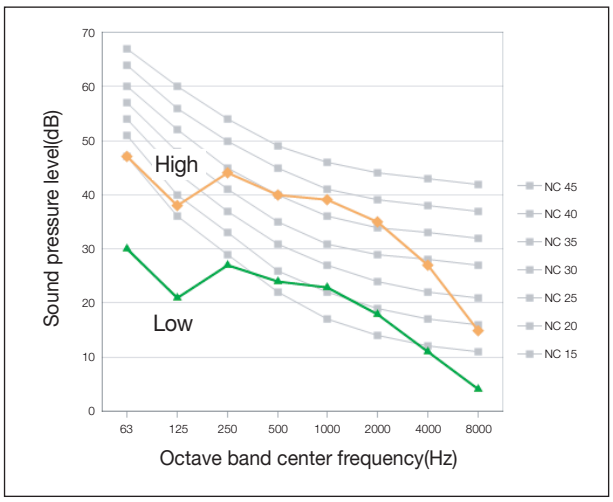

㉚ AR07FSFPESNN

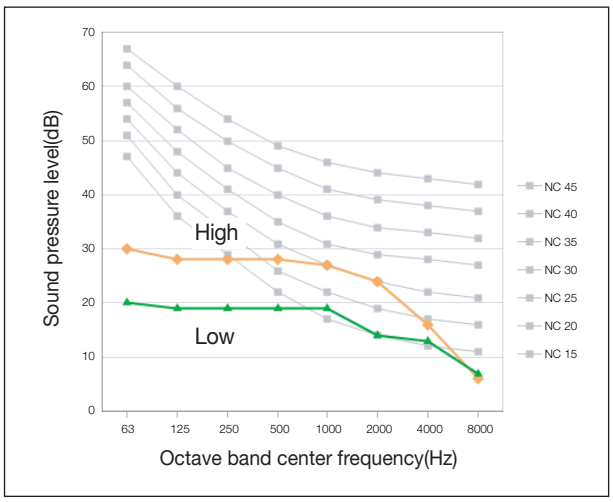

6 Sound pressure level

6-2. Indoor units

2) NC Curve

㉛ AR09FSFPESNN

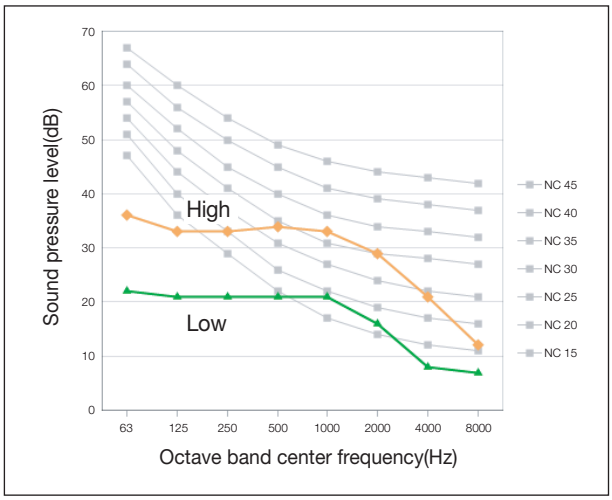

㉜ AR12FSFPESNN

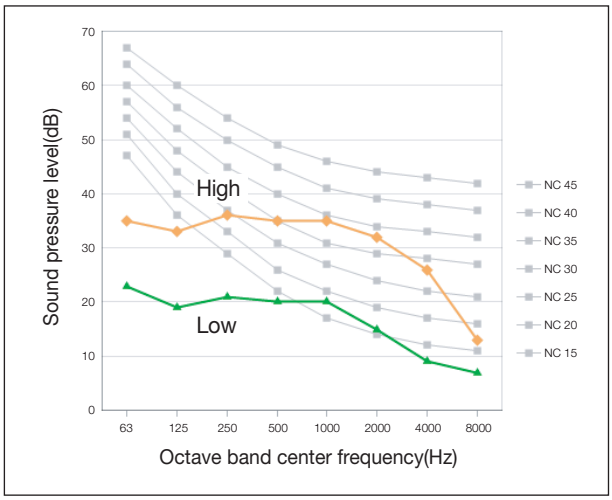

㉝ AR18FSFPESNN

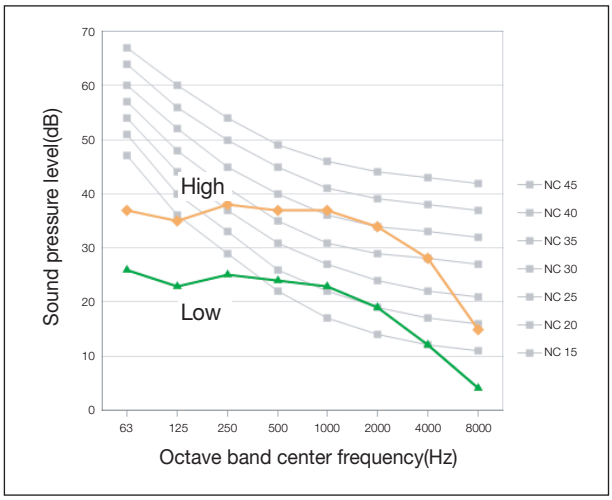

㉞ AR24FSFPESNN

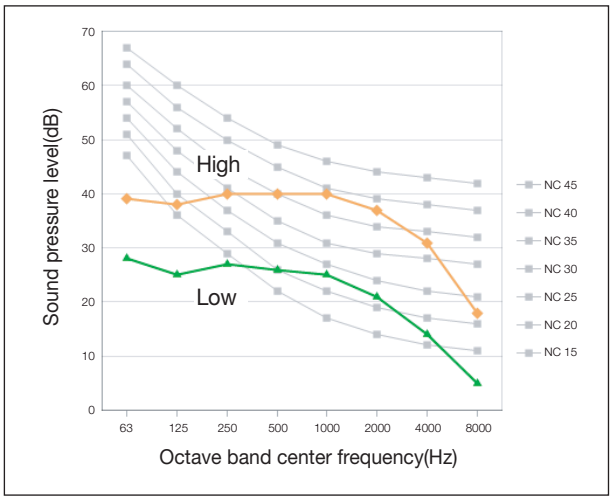

㉟ AR09FSSEDWUN

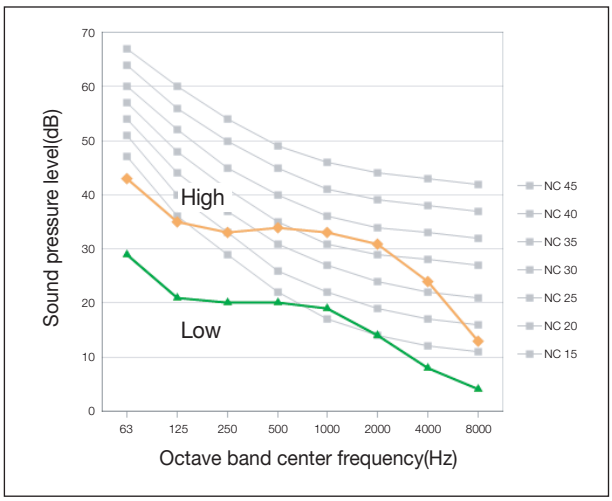

㊱ AR12FSSEDWUN

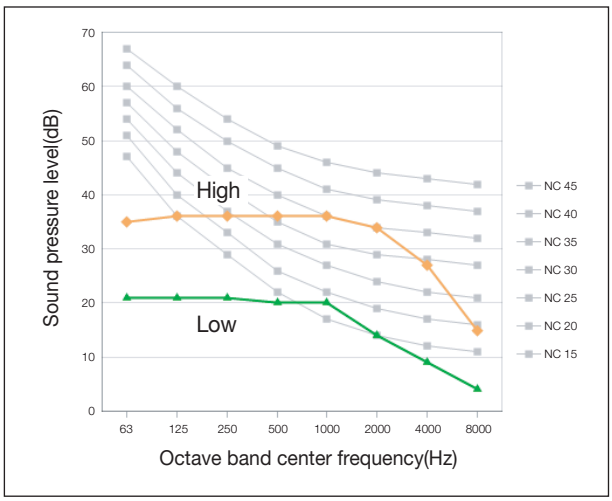

2) NC Curve

㊲ AR18FSSEDWUN

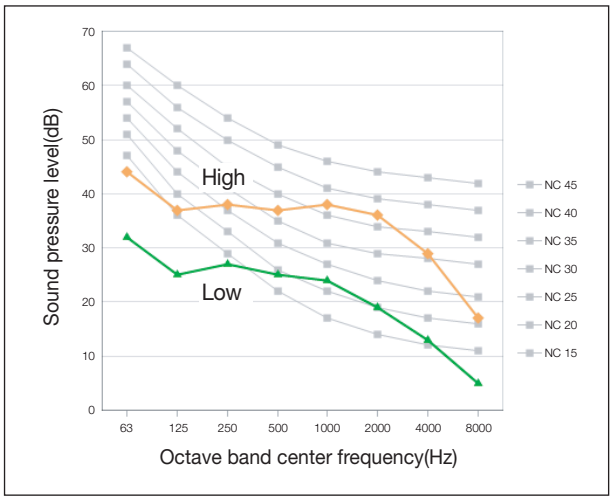

㊳ AR24FSSEDWUN

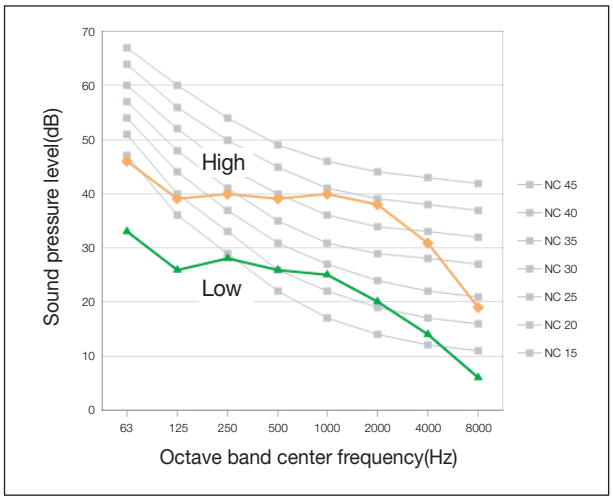

7 Sound power level

7-1. Outdoor units

1) Operation sound power level

Unit : dB(A)

Model	Power
AJ040FCJ2EH/EU	61
AJ050FCJ2EH/EU	61
AJ052FCJ3EH/EU	61
AJ068FCJ3EH/EU	63
AJ070FCJ4EH/EU	63
AJ080FCJ4EH/EU	63
AJ100FCJ5EH/EU	70

☑ Note

- dBA = A-Weighted sound power level.
- Reference power : 1pW
- Measured according to ISO 3741.

① AJ040FCJ2EH/EU

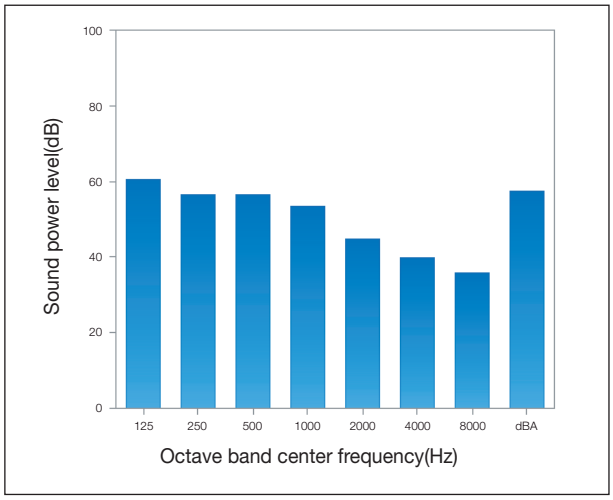

② AJ050FCJ2EH/EU

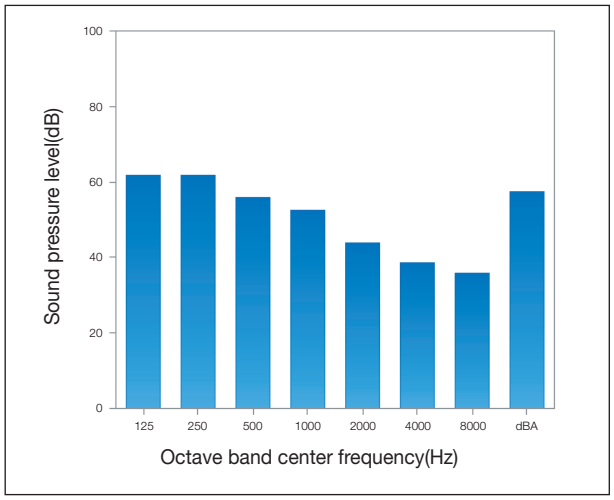

③ AJ052FCJ3EH/EU

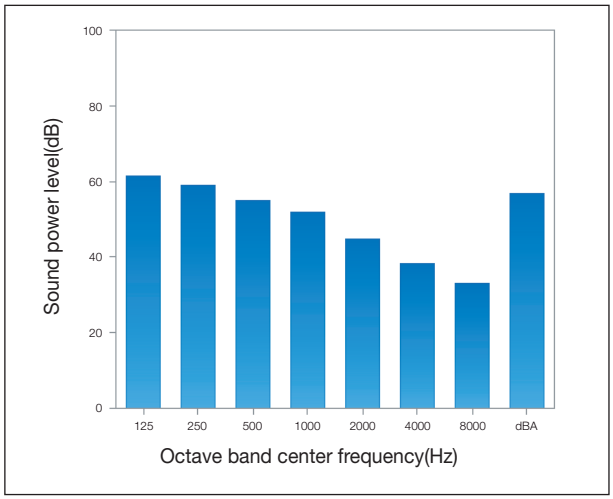

④ AJ068FCJ3EH/EU

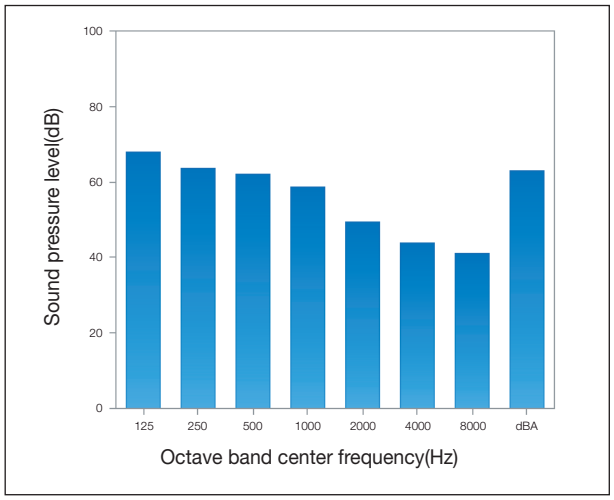

⑤ AJ070FCJ4EH/EU

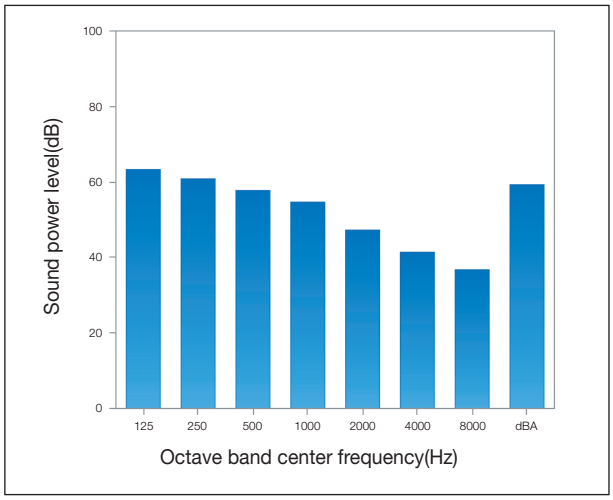

⑥ AJ080FCJ4EH/EU

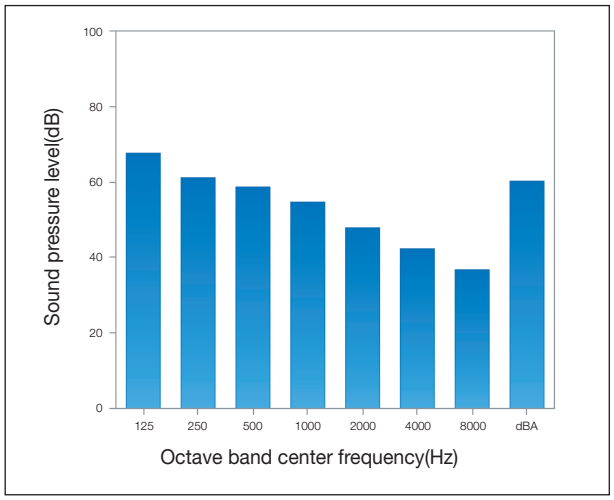

⑦ AJ100FCJ5EH/EU

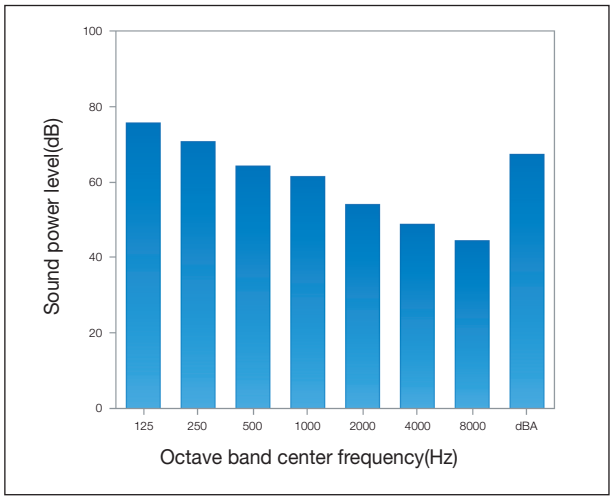

7 Sound power level

7-2. Indoor units

1) Operation sound power level

Unit : dB(A)

Model	Power	Model	Power
AR07FSFPDGMN	53	AR09FSSYAWTN	58
AR09FSFPDGMN	54	AR12FSSYAWTN	60
AR12FSFPDGMN	56	AR18FSSYAWTN	60
AR18FSFPDGMN	57	AR07FSFPESNN	53
AR24FSFPDGMN	62	AR09FSFPESNN	56
AR09FSSEDWUN	56	AR12FSFPESNN	57
AR12FSSEDWUN	58	AR18FSFPESNN	57
AR18FSSEDWUN	57	AR24FSFPESNN	62
AR24FSSEDWUN	62		

☑ ***Note***

- dBA = A-Weighted sound power level.
- Reference power : 1pW
- Measured according to ISO 3741.

① AR07FSFPDGMN

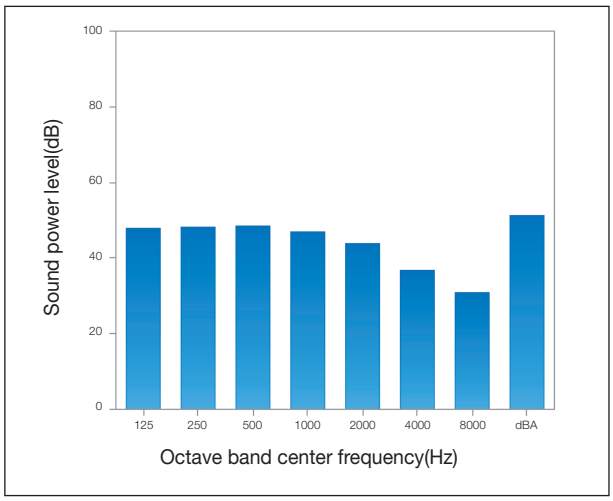

② AR09FSFPDGMN

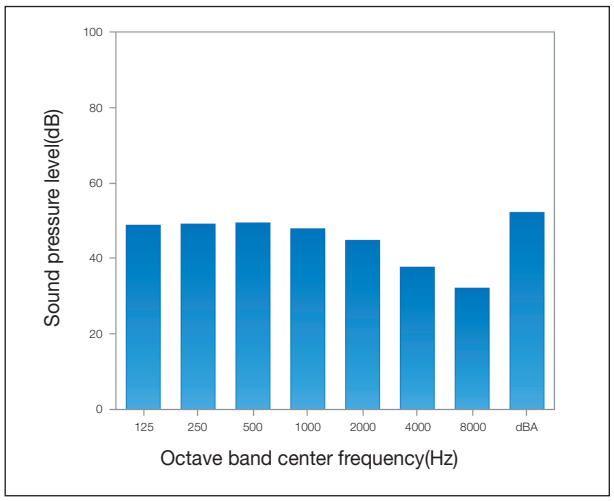

③ AR12FSFPDGMN

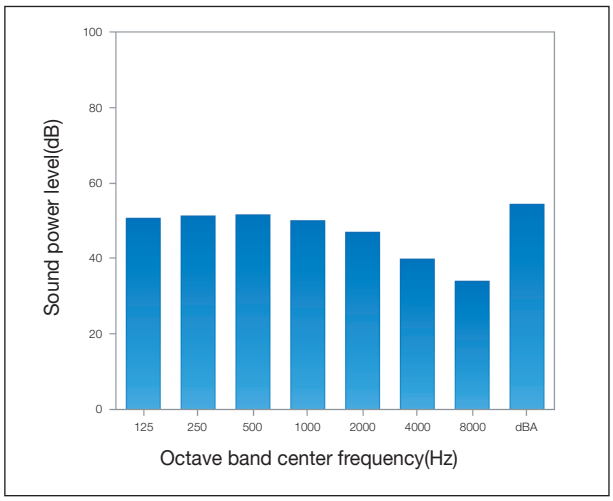

④ AR18FSFPDGMN

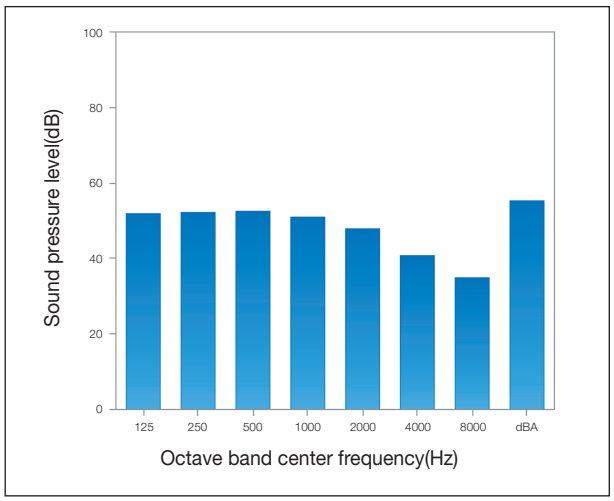

⑤ AR24FSFPDGMN

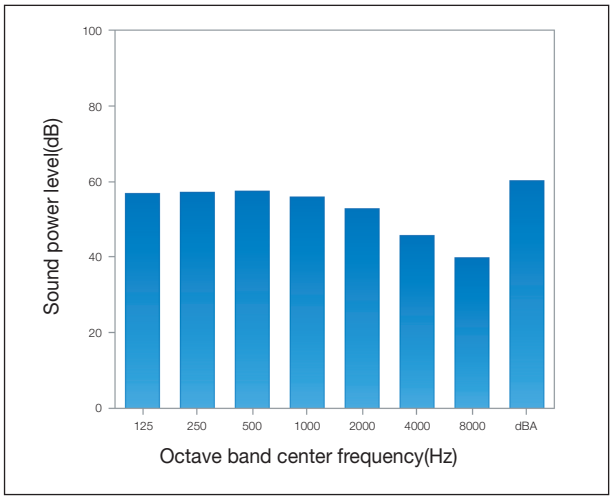

⑥ AR09FSSEDWUN

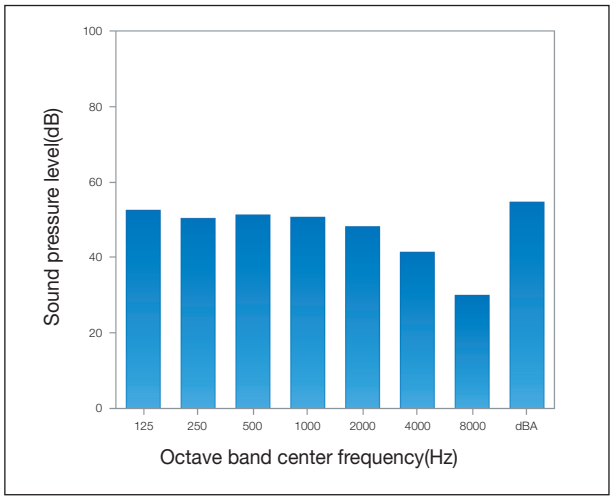

⑦ AR12FSSEDWUN

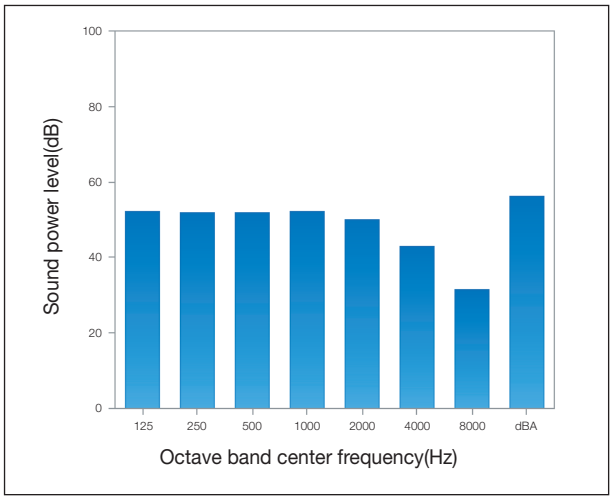

⑧ AR18FSSEDWUN

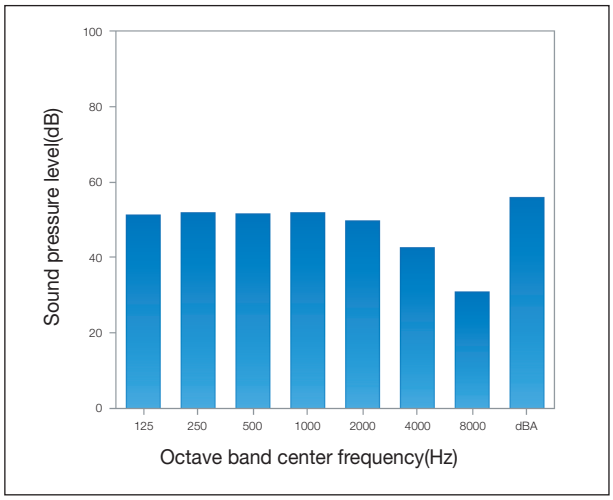

⑨ AR24FSSEDWUN

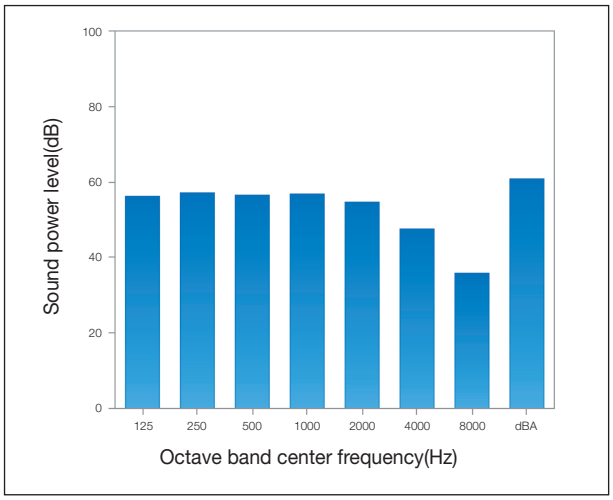

⑩ AR09FSSYAWTN

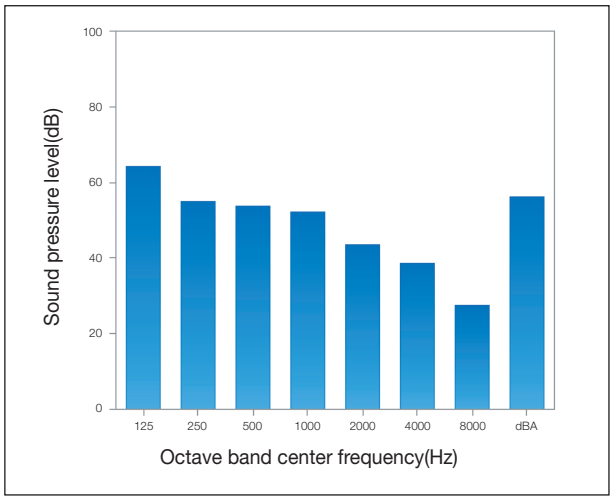

7 Sound power level

7-2. Indoor units

⑪ AR12FSSYAWTN

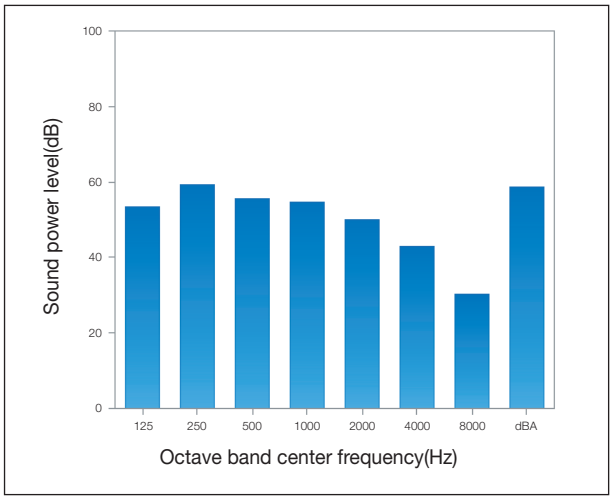

⑫ AR18FSSYAWTN

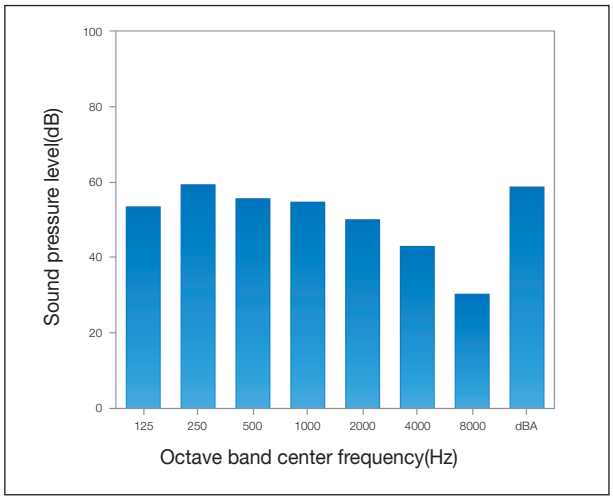

⑬ AR07FSFPESNN

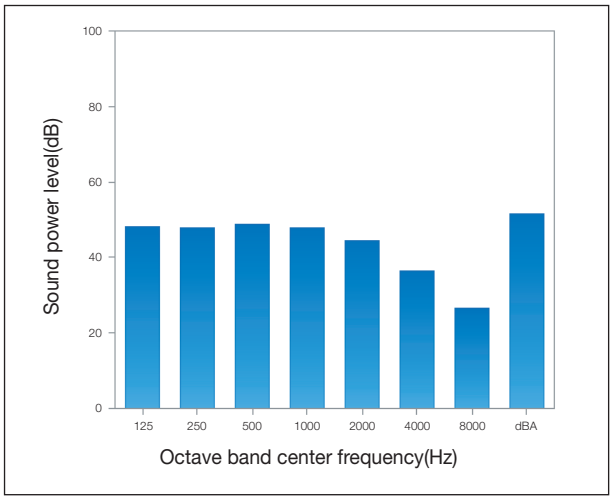

⑭ AR09FSFPESNN

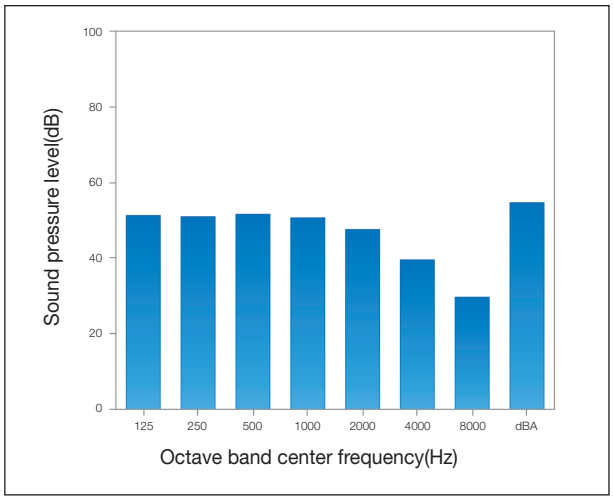

⑮ AR12FSFPESNN

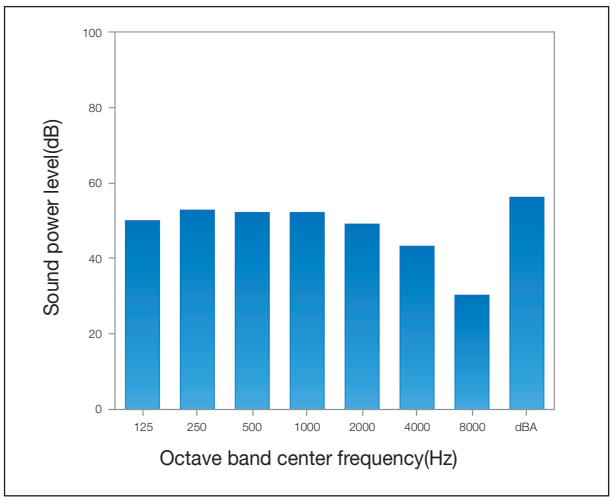

⑯ AR18FSFPESNN

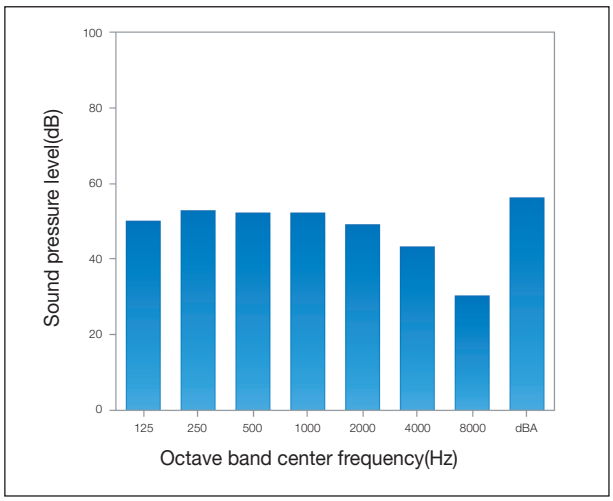

⑰ AR24FSFPESNN

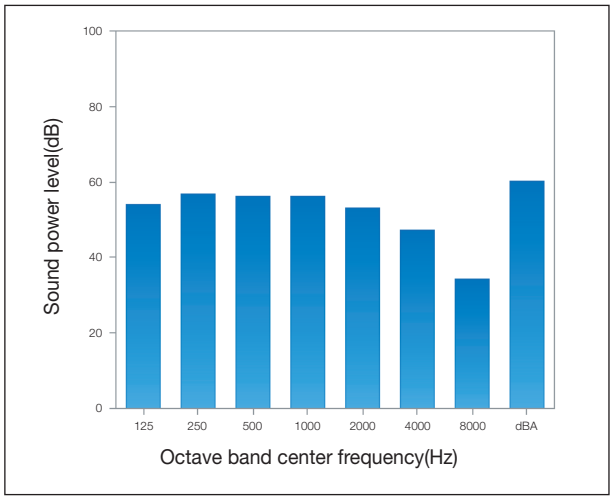

8 Operation limit

8-1. AJ040/050/052/060/070/080FCJ✳EH/EU

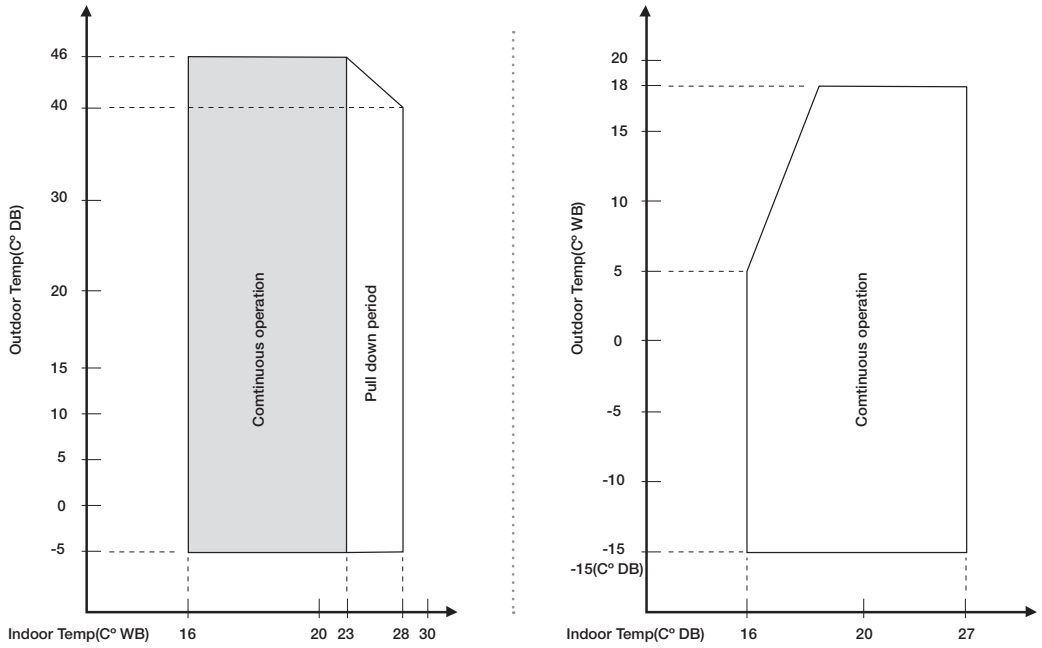

The graphs are based on the following conditions.

1. Equivalent piping length
2. Level difference 0m
3. Air flow rate High

AJ040FCJ2EH/EU / AJ050FCJ2EH/EU / AJ052FCJ3EH/EU / AJ068FCJ3EH/EU : 5m

AJ070FCJ4EH/EU / AJ080FCJ4EH/EU : 7.5m

8-2. AJ100FCJ5EH/EU

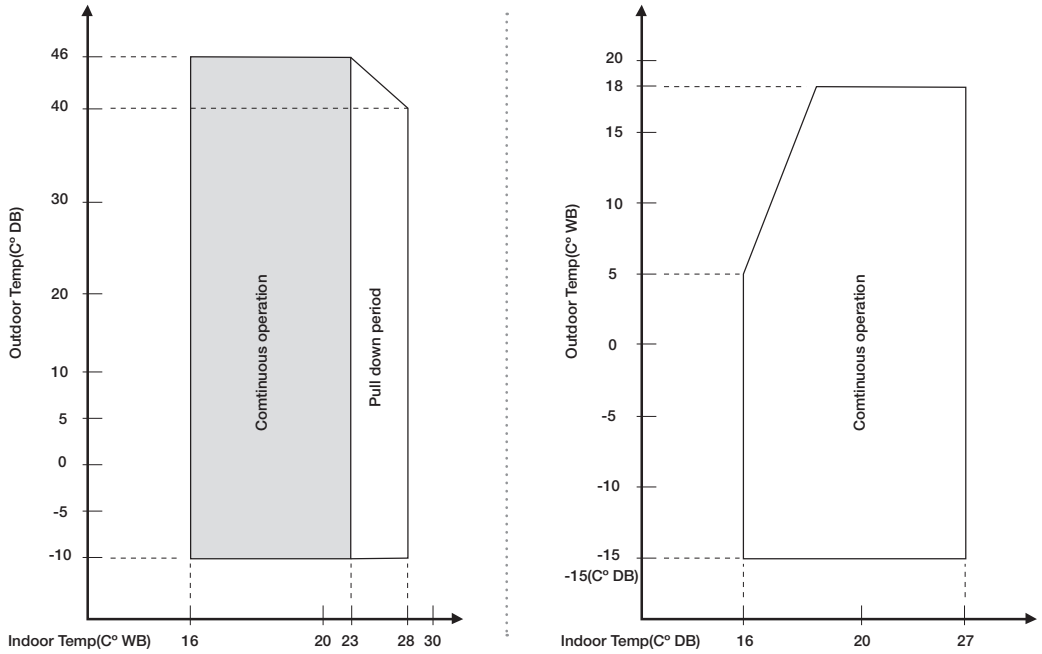

The graphs are based on the following conditions.

1. Equivalent piping length
2. Level difference 0m
3. Air flow rate High

AJ100FCJ5EH/EU : 5m

9 Recommended operation range (PQ Curve)

9-1. Slim Duct

1) NJ026LHXEA

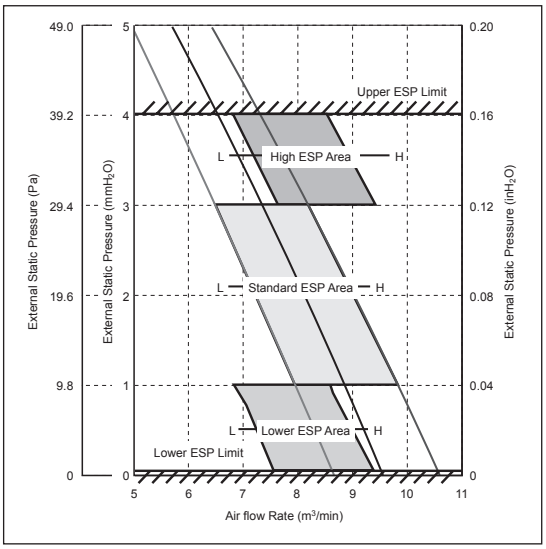

External Static Pressure (mmAq)	Option Code
0	015201-1400Fb-200000-300000
2	015201-14020c-200000-300000
4	015201-1403A2-200000-300000

2) NJ035LHXEA

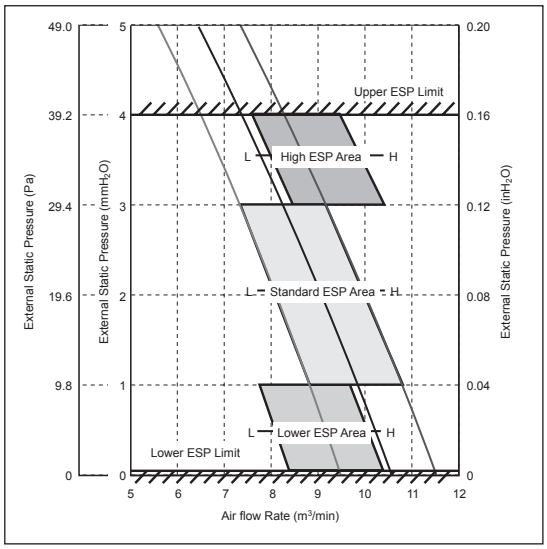

External Static Pressure (mmAq)	Option Code
0	015201-16025d-200000-300000
2	015201-16026E-200000-300000
4	015203-160108-200000-300000

9-2. MSP Duct

1) MH052FUEA

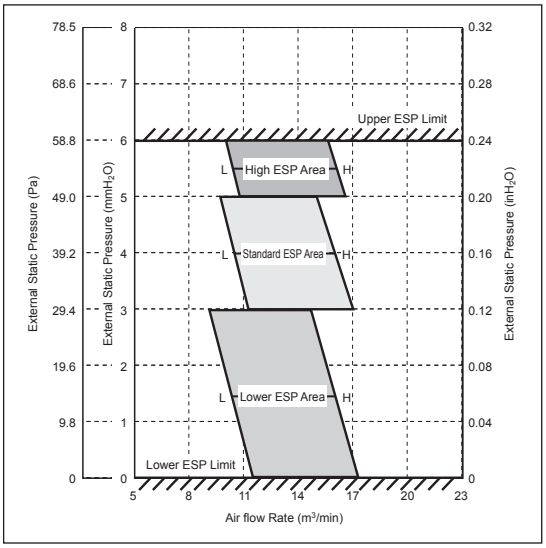

External Static Pressure (mmAq)	Option Code
2	012221-194360-200000-300000
4	012221-1943A2-200000-300000
6	012223-194105-200000-300000

☑ Note

- Adjust option code according to the actual installation condition (external static pressure).

10 Electric Characteristics

Models	Rated		Voltage Range		Power Supply	
Outdoor Unit	Hz	Volts.	Min.	Max.	MCA	MFA
AJ040FCJ2EH/EU	50	220~240	198	264	9.80	11.25
AJ050FCJ2EH/EU	50	220~240	198	264	11.80	13.75
AJ052FCJ3EH/EU	50	220~240	198	264	12.20	13.75
AJ068FCJ3EH/EU	50	220~240	198	264	14.44	16.25
AJ070FCJ4EH/EU	50	220~240	198	264	18.68	20.75
AJ080FCJ4EH/EU	50	220~240	198	264	18.68	20.75
AJ100FCJ5EH/EU	50	220~240	198	264	26.12	28.75

❊ Abbreviations
- MCA : Min. Circuit Amps. (A)
- MFA : Max. Fuse Amps. (A)

☑ ***Note***

1. Voltage range
   - Units are suitable for use on electrical systems where voltage supplied to unit terminal is not below or above listed range limits.
2. Maximum allowable voltage variation between phases is 2%.
3. Wire size & type must comply with the applicable local and national code.
   - Wire size : Based on the value of MCA
   - Wire type : 60245 IEC 57(IEC) or H05RN-F(CENELEC) grade or above
4. MCA represents maximum input current.
5. MFA represents capacity which may accept MCA.
6. MFA is used to select the circuit breaker and the ground fault circuit interrupter (earth leakage circuit breaker).

Memo

SAMSUNG

2013.06
DBEU-11032J(4)

SAMSUNG

SAMSUNG ELECTRONICS Co., LTD.
Air Conditioning Marketing Group

Head Office (Suwon Korea) : 416 Maetan-3Dong, Yeongtong-Gu, Suwon City Gyeonggi-Do, Korea
TEL : 82-31-200-4549 Website : www.dvmsystem.com Email : airconditioner@samsung.com

Specifications may be subject to change without prior notice for product improvement.