EHS

Technical Data Book

EHS Split (50Hz)

SAMSUNG

Contents

I. Products

II. Outdoor Unit

III. Hydro Unit

IV. Application

I. Products

1. Nomenclature

1-1. Outdoor Unit

Model Name (New)

AE	X	060	E	D	E	H	A	/	00
(1)	(2)	(3)	(4)	(5)	(6)	(7)	(8)		(Buyer)

(1) Classification I	
AE	EHS

(2) Classification II	
X	Outdoor Unit

(3) Capacity
x 1/10 kW (3 digits)

(4) Product Notation		
E	Single	EHS
T	Multi	
Y	Mono	

(5) Mode	
D	EHS

(6) Rating Voltage	
E	1Φ, 220~240V, 50Hz
G	3Φ, 380~415V, 50Hz

(7) Product Notation		
H	Heat Pump	R410A

(8) Version	
A~Z	Export

1. Nomenclature

1-2. Indoor Unit

Model Name (New)

AE	N	080	Y	D	E	H	A	/	00
(1)	(2)	(3)	(4)	(5)	(6)	(7)	(8)		(Buyer)

(1) Classification I	
AE	EHS

(2) Classification II	
N	Indoor Unit

(3) Capacity
x 1/10 kW (3 digits)

(4) Product Notation		
Y	Hydro Unit (Wall Mounted)	EHS
B	Hydro Unit (Floor Standing)	
X	Cylinder Unit	
W	DHW Tank	

(5) Mode	
D	Deluxe

(6) Rating Voltage	
E	1Φ, 220~240V, 50Hz
G	3Φ, 380~415V, 50Hz

(7) Product Notation		
H	Heat Pump	R410A

(8) Version	
A~Z	Export

2. Line-up

2-1. Outdoor Unit

Split Type	Capacity (kW)				
	6.0	10.0	12.5	14.0	16.0
Single Phase	●	●	●	●	●
3 Phase			●	●	●

2-2. Indoor Unit

Hydro Unit	Capacity (kW)	
	8.0	16.0
Single Phase	●	●
3 Phase		●

II. Outdoor Unit

1. Specifications

1-1. Outdoor Unit

c				AEX060EDEHA/EU	AEX100EDEHA/EU	AEX125EDEHA/EU
Mode			-	Heat Pump (A2W Only)	Heat Pump (A2W Only)	Heat Pump (A2W Only)
Power Supply			Ø, #, V, Hz	1, 2, 220-240, 50	1, 2, 220-240, 50	1, 2, 220-240, 50
Performance (A2W #1)	Nominal Capacity *1)	Heating (Min/Std/Max)	W	1,611 / 5,800 / 5,800	2,459 / 10,000 / 10,000	3,750 / 12,500 / 12,500
			Btu/h	5,500 / 19,800 / 19,800	8,385 / 34,100 / 34,100	12,810 / 42,700 / 42,700
		Cooling (Min/Std/Max)	W	1,325 / 5,300 / 5,300	2,068 / 9,100 / 9,100	3,462 / 15,000 / 15,000
			Btu/h	4,525 / 18,100 / 18,100	7,045 / 31,000 / 31,000	11,815 / 51,200 / 51,200
	Nominal Power Input *1)	Heating (Min/Std/Max)	W	339 / 1,220 / 1,220	546 / 2,220 / 2,220	798 / 2,660 / 2,660
		Cooling (Min/Std/Max)	W	476 / 1,905 / 1,905	657 / 2,890 / 2,890	1,004 / 4,350 / 4,350
	Nominal Current Input *1)	Heating (Min/Std/Max)	A	1.6 / 5.7 / 5.7	2.4 / 9.7 / 9.7	3.5 / 11.7 / 11.7
		Cooling (Min/Std/Max)	A	2.2 / 8.8 / 8.8	2.9 / 12.7 / 12.7	4.4 / 19.1 / 19.1
	COP(Heating) *1)		W/W	4.75	4.50	4.70
	EER(Cooling) *1)		W/W	3.50	3.15	3.45
	ESEER *2)		W/W	4.50	4.60	4.80
Peformance (A2W, Low Temperature)	A2/W35	Heating Capacity	W	4,180	7,760	8,990
		COP	W/W	3.14	3.13	3.05
	A-7/W35	Heating Capacity	W	5,120	8,710	10,310
		COP	W/W	2.45	2.35	2.47
Performance (A2A)	Nominal Capacity	Cooling	W	-	-	-
			Btu/h	-	-	-
	Allowable No. of Indoor Units		EA	-	-	-
	COP(Heating) *3)		W/W	-	-	-
	EER(Cooling) *3)		W/W	-	-	-
Electric Specification	MCA		A	20.0	22.0	28.0
	MFA		A	25.0	27.5	35.0
Water Side	Heat Exchanger	Type	-	-	-	-
		Quantity	-	-	-	-
	Required Water Pressure		bar	-	-	-
	Required Flow Rate		LPM	-	-	-
	Flow Switch		LPM	-	-	-
	Piping Connections	In/Out	Φ, inch	-	-	-
Refrigerant Side	Compressor	Type	-	Rotary Inverter	Rotary Inverter	Rotary Inverter
		Model	-	UG4T200FUAE4	UG8T300FUBJU	UG5T450FUEJX
	Oil	Type	-	POE	POE	POE
	Refrigerant	Type	-	R410A	R410A	R410A
		Factory Charging	g	1,200	2,000	2,800
	Piping Connections	Liquid	Φ, mm	6.35	9.52	9.52
			Φ, inch	1/4	3/8	3/8
		Gas	Φ, mm	15.88	15.88	15.88
			Φ, inch	5/8	5/8	5/8
	Installation Limitation	Length	m	30	50	50
		Height	m	20	30	30
Base Heater	Capacity	-	W	-	150	150
Sound	Sound Pressure *3)	Heating	dB(A)	48	50	50
		Cooling	dB(A)	48	52	51
	Sound Power		dB(A)	62	66	64
External Dimension	Weight	Net	kg	47.5	74.0	98.0
		Gross	kg	52.5	82.0	108.0
	Dimensions (WxHxD)	Net	mm	880 x 638 x 310	940 x 998 x 330	940 x 1,420 x 330
		Gross	mm	1,024 x 750 x 414	995 x 1,096 x 426	995 x 1,548 x 426
Operating Range	Ambient (A2W)	Heating	°C	-20~35	-20~35	-20~35
		Cooling	°C	10~46	10~46	10~46
		DHW	°C	-20~43	-20~43	-20~43
	Ambient (A2A)	Heating	°C	-	-	-
		Cooling	°C	-	-	-
	Leaving Water	Heating	°C	-	-	-
		Cooling	°C	-	-	-

*1)~*2) A2W rating conditions in accordance with Eurovent Rating Standard for Liquid Chilling Packages 6/C/003-2008.

*1) A2W Condition #1 : (Heating) Water In/Out 30℃/35℃, Outdoor Air DB/WB 7℃/6℃; (Cooling) Water In/Out 23℃/18℃, Outdoor Air DB 35℃.

*2) A2W Condition for ESEER(Cooling) at Water Out 7℃.

*3) Sound level was acquired in an anechoic room. Thus actual noise level may be different depending on the installation conditions.

1. Specifications

1-1. Outdoor Unit

Model Name				AEX140EDEHA/EU	AEX160EDEHA/EU
Mode			-	Heat Pump (A2W Only)	Heat Pump (A2W Only)
Power Supply			Ø, #, V, Hz	1, 2, 220-240, 50	1, 2, 220-240, 50
Performance (A2W #1)	Nominal Capacity *1)	Heating (Min/Std/Max)	W	3,750 / 14,000 / 14,000	3,750 / 16,000 / 16,000
			Btu/h	12,804 / 47,800 / 47,800	12,797 / 54,600 / 54,600
		Cooling (Min/Std/Max)	W	3,375 / 16,200 / 16,200	3,263 / 17,400 / 17,400
			Btu/h	11,521 / 55,300 / 55,300	11,138 / 59,400 / 59,400
	Nominal Power Input *1)	Heating (Min/Std/Max)	W	833 / 3,110 / 3,110	872 / 3,720 / 3,720
		Cooling (Min/Std/Max)	W	1,073 / 5,150 / 5,150	1,125 / 6,000 / 6,000
	Nominal Current Input *1)	Heating (Min/Std/Max)	A	3.7 / 13.7 / 13.7	3.8 / 16.3 / 16.3
		Cooling (Min/Std/Max)	A	4.7 / 22.6 / 22.6	5.0 / 26.4 / 26.4
	COP(Heating) *1)		W/W	4.50	4.30
	EER(Cooling) *1)		W/W	3.15	2.90
	ESEER *2)		W/W	4.75	4.70
Peformance (A2W, Low Temperature)	A2/W35	Heating Capacity	W	10,230	11,400
		COP	W/W	3.00	2.89
	A-7/W35	Heating Capacity	W	11,830	13,350
		COP	W/W	2.45	2.38
Performance (A2A)	Nominal Capacity	Cooling	W	-	-
			Btu/h	-	-
	Allowable No. of Indoor Units		EA	-	-
	COP(Heating) *3)		W/W	-	-
	EER(Cooling) *3)		W/W	-	-
Electric Specification	MCA		A	30.0	32.0
	MFA		A	37.5	40.0
Water Side	Heat Exchanger	Type	-	-	-
		Quantity	-	-	-
	Required Water Pressure		bar	-	-
	Required Flow Rate		LPM	-	-
	Flow Switch		LPM	-	-
	Piping Connections	In/Out	Φ, inch	-	-
Refrigerant Side	Compressor	Type	-	Rotary Inverter	Rotary Inverter
		Model	-	UG5T450FUEJX	UG5T450FUEJX
	Oil	Type	-	POE	POE
	Refrigerant	Type	-	R410A	R410A
		Factory Charging	g	2,800	2,800
	Piping Connections	Liquid	Φ, mm	9.52	9.52
			Φ, inch	3/8	3/8
		Gas	Φ, mm	15.88	15.88
			Φ, inch	5/8	5/8
	Installation Limitation	Length	m	50	50
		Height	m	30	30
Base Heater	Capacity	-	W	150	150
Sound	Sound Pressure *3)	Heating	dB(A)	50	53
		Cooling	dB(A)	53	54
	Sound Power		dB(A)	66	68
External Dimension	Weight	Net	kg	98.0	98.0
		Gross	kg	108.0	108.0
	Dimensions (WxHxD)	Net	mm	940 x 1,420 x 330	940 x 1,420 x 330
		Gross	mm	995 x 1,548 x 426	995 x 1,548 x 426
Operating Range	Ambient (A2W)	Heating	°C	-20~35	-20~35
		Cooling	°C	10~46	10~46
		DHW	°C	-20~43	-20~43
	Ambient (A2A)	Heating	°C	-	-
		Cooling	°C	-	-
	Leaving Water	Heating	°C	-	-
		Cooling	°C	-	-

*1)~*2) A2W rating conditions in accordance with Eurovent Rating Standard for Liquid Chilling Packages 6/C/003-2008.

*1) A2W Condition #1 : (Heating) Water In/Out 30℃/35℃, Outdoor Air DB/WB 7℃/6℃; (Cooling) Water In/Out 23℃/18℃, Outdoor Air DB 35℃.

*2) A2W Condition for ESEER(Cooling) at Water Out 7℃.

*3) Sound level was acquired in an anechoic room. Thus actual noise level may be different depending on the installation conditions.

1. Specifications

1-1. Outdoor Unit

Model Name				AEX125EDGHA/EU	AEX140EDGHA/EU	AEX160EDGHA/EU
Mode			-	Heat Pump (A2W Only)	Heat Pump (A2W Only)	Heat Pump (A2W Only)
Power Supply			Ø, #, V, Hz	3, 4, 380-415, 50	3, 4, 380-415, 50	3, 4, 380-415, 50
Performance (A2W #1)	Nominal Capacity *1)	Heating (Min/Std/Max)	W	3,750 / 12,500 / 12,500	3,750 / 14,000 / 14,000	3,750 / 16,000 / 16,000
			Btu/h	12,810 / 42,700 / 42,700	12,804 / 47,800 / 47,800	12,797 / 54,600 / 54,600
		Cooling (Min/Std/Max)	W	3,462 / 15,000 / 15,000	3,375 / 16,200 / 16,200	3,263 / 17,400 / 17,400
			Btu/h	11,815 / 51,200 / 51,200	11,521 / 55,300 / 55,300	11,138 / 59,400 / 59,400
	Nominal Power Input *1)	Heating (Min/Std/Max)	W	798 / 2,660 / 2,660	833 / 3,110 / 3,110	872 / 3,720 / 3,720
		Cooling (Min/Std/Max)	W	1,004 / 4,350 / 4,350	1,073 / 5,150 / 5,150	1,125 / 6,000 / 6,000
	Nominal Current Input *1)	Heating (Min/Std/Max)	A	1.3 / 4.2 / 4.2	1.3 / 4.9 / 4.9	1.4 / 5.8 / 5.8
		Cooling (Min/Std/Max)	A	1.6 / 6.8 / 6.8	1.7 / 8.1 / 8.1	1.8 / 9.4 / 9.4
	COP(Heating) *1)		W/W	4.70	4.50	4.30
	EER(Cooling) *1)		W/W	3.45	3.15	2.90
	ESEER *2)		W/W	4.80	4.75	4.70
Peformance (A2W, Low Temperature)	A2/W35	Heating Capacity	W	8,990	10,230	11,400
		COP	W/W	3.05	3.00	2.89
	A-7/W35	Heating Capacity	W	10,310	11,830	13,350
		COP	W/W	2.47	2.45	2.38
Performance (A2A)	Nominal Capacity	Cooling	W	-	-	-
			Btu/h	-	-	-
	Allowable No. of Indoor Units		EA	-	-	-
	COP(Heating) *3)		W/W	-	-	-
	EER(Cooling) *3)		W/W	-	-	-
Electric Specification	MCA		A	10.0	11.0	12.0
	MFA		A	12.5	13.8	15.0
Water Side	Heat Exchanger	Type	-	-	-	-
		Quantity	-	-	-	-
	Required Water Pressure		bar	-	-	-
	Required Flow Rate		LPM	-	-	-
	Flow Switch		LPM	-	-	-
	Piping Connections	In/Out	Φ, inch	-	-	-
Refrigerant Side	Compressor	Type	-	Rotary Inverter	Rotary Inverter	Rotary Inverter
		Model	-	UG5T450FUFJX	UG5T450FUFJX	UG5T450FUFJX
	Oil	Type	-	POE	POE	POE
	Refrigerant	Type	-	R410A	R410A	R410A
		Factory Charging	g	2,800	2,800	2,800
	Piping Connections	Liquid	Φ, mm	9.52	9.52	9.52
			Φ, inch	3/8	3/8	3/8
		Gas	Φ, mm	15.88	15.88	15.88
			Φ, inch	5/8	5/8	5/8
	Installation Limitation	Length	m	50	50	50
		Height	m	30	30	30
Base Heater	Capacity	-	W	150	150	150
Sound	Sound Pressure *3)	Heating	dB(A)	50	50	53
		Cooling	dB(A)	51	53	54
	Sound Power		dB(A)	64	66	68
External Dimension	Weight	Net	kg	98.0	98.0	98.0
		Gross	kg	108.0	108.0	108.0
	Dimensions (WxHxD)	Net	mm	940 x 1,420 x 330	940 x 1,420 x 330	940 x 1,420 x 330
		Gross	mm	995 x 1,548 x 426	995 x 1,548 x 426	995 x 1,548 x 426
Operating Range	Ambient (A2W)	Heating	°C	-20~35	-20~35	-20~35
		Cooling	°C	10~46	10~46	10~46
		DHW	°C	-20~43	-20~43	-20~43
	Ambient (A2A)	Heating	°C	-	-	-
		Cooling	°C	-	-	-
	Leaving Water	Heating	°C	-	-	-
		Cooling	°C	-	-	-

*1)~*2) A2W rating conditions in accordance with Eurovent Rating Standard for Liquid Chilling Packages 6/C/003-2008.

*1) A2W Condition #1 : (Heating) Water In/Out 30℃/35℃, Outdoor Air DB/WB 7℃/6℃; (Cooling) Water In/Out 23℃/18℃, Outdoor Air DB 35℃.

*2) A2W Condition for ESEER(Cooling) at Water Out 7℃.

*3) Sound level was acquired in an anechoic room. Thus actual noise level may be different depending on the installation conditions.

2. Capacity Tables

2-1. AEX060/100/125/140/160ED*HA

1) Maximum Heating Capacity (Peak Value)

LWT (Leaving Water Temp.), Tamb (Ambient Temp.), HC (Heating Capacity), PI (Power input)

	LWT (℃)	25		30		35		40		45		50		55	
	Tamb (℃)	HC(kW)	PI(kW)	HC(kW)	PI(kW)	HC(kW)	PI(kW)	HC(kW)	PI(kW)	HC(kW)	PI(kW)	HC(kW)	PI(kW)	HC(kW)	PI(kW)
AEX060EDEHA/EU	-20	4.74	1.52	4.55	1.74	4.36	1.96	4.17	2.17						
	-15	5.19	1.55	4.99	1.77	4.78	1.99	4.57	2.21	4.37	2.43				
	-10	5.65	1.57	5.42	1.80	5.20	2.02	4.98	2.24	4.75	2.47	4.53	2.69	4.30	2.91
	-7	5.92	1.59	5.69	1.81	5.45	2.04	5.22	2.26	4.98	2.49	4.75	2.72	4.51	2.94
	-2	6.21	1.42	5.97	1.62	5.72	1.82	5.47	2.02	5.23	2.23	4.98	2.43	4.73	2.63
	2	5.74	1.17	5.51	1.34	5.28	1.51	5.06	1.68	4.83	1.84	4.60	2.01	4.37	2.18
	7	6.30	0.95	6.05	1.09	5.80	1.22	5.55	1.36	5.30	1.49	5.05	1.63	4.80	1.76
	10	6.52	0.97	6.27	1.11	6.02	1.24	5.77	1.38	5.52	1.51	5.27	1.65	5.02	1.78
	15	6.89	1.00	6.64	1.14	6.39	1.27	6.14	1.41	5.89	1.54	5.64	1.68	5.39	1.81
	20	7.25	1.04	7.00	1.17	6.75	1.31	6.50	1.44	6.25	1.58	6.00	1.71	5.75	1.85
	LWT (℃)	25		30		35		40		45		50		55	
	Tamb (℃)	HC(kW)	PI(kW)	HC(kW)	PI(kW)	HC(kW)	PI(kW)	HC(kW)	PI(kW)	HC(kW)	PI(kW)	HC(kW)	PI(kW)	HC(kW)	PI(kW)
AEX100EDEHA/EU	-20	7.93	2.62	7.74	3.03	7.55	3.44	7.36	3.85						
	-15	8.69	2.66	8.48	3.08	8.27	3.49	8.07	3.91	7.86	4.33				
	-10	9.45	2.70	9.23	3.13	9.00	3.55	8.78	3.97	8.55	4.40	8.33	4.82	8.10	5.25
	-7	9.91	2.73	9.67	3.16	9.44	3.58	9.20	4.01	8.96	4.44	8.73	4.87	8.49	5.29
	-2	10.67	2.50	10.42	2.89	10.16	3.29	9.91	3.68	9.65	4.07	9.40	4.46	9.15	4.86
	2	10.33	2.17	10.08	2.51	9.84	2.85	9.59	3.19	9.34	3.53	9.10	3.87	8.85	4.21
	7	10.50	1.69	10.25	1.96	10.00	2.22	9.75	2.49	9.50	2.75	9.25	3.02	9.00	3.28
	10	11.10	1.77	10.85	2.04	10.60	2.30	10.35	2.57	10.10	2.83	9.85	3.10	9.60	3.36
	15	12.10	1.90	11.85	2.17	11.60	2.43	11.35	2.70	11.10	2.96	10.85	3.23	10.60	3.49
	20	13.10	2.04	12.85	2.30	12.60	2.57	12.35	2.83	12.10	3.10	11.85	3.36	11.60	3.63
	LWT (℃)	25		30		35		40		45		50		55	
	Tamb (℃)	HC(kW)	PI(kW)	HC(kW)	PI(kW)	HC(kW)	PI(kW)	HC(kW)	PI(kW)	HC(kW)	PI(kW)	HC(kW)	PI(kW)	HC(kW)	PI(kW)
AEX125ED*HA/EU	-20	10.19	3.41	9.81	3.83	9.44	4.26	9.06	4.69						
	-15	11.17	3.46	10.76	3.90	10.34	4.33	9.93	4.77	9.52	5.20				
	-10	12.15	3.52	11.70	3.96	11.25	4.40	10.80	4.84	10.35	5.28	9.90	5.73	9.45	6.17
	-7	12.74	3.55	12.27	3.99	11.79	4.44	11.32	4.89	10.85	5.33	10.38	5.78	9.91	6.23
	-2	13.48	3.20	12.98	3.60	12.48	4.00	11.98	4.40	11.48	4.81	10.98	5.21	10.48	5.61
	2	12.65	2.69	12.18	3.03	11.71	3.37	11.24	3.71	10.77	4.04	10.30	4.38	9.84	4.72
	7	13.50	2.13	13.00	2.39	12.50	2.66	12.00	2.93	11.50	3.20	11.00	3.46	10.50	3.73
	10	14.10	2.15	13.60	2.41	13.10	2.68	12.60	2.95	12.10	3.22	11.60	3.48	11.10	3.75
	15	15.10	2.18	14.60	2.45	14.10	2.71	13.60	2.98	13.10	3.25	12.60	3.52	12.10	3.78
	20	16.10	2.21	15.60	2.48	15.10	2.75	14.60	3.01	14.10	3.28	13.60	3.55	13.10	3.82
	LWT (℃)	25		30		35		40		45		50		55	
	Tamb (℃)	HC(kW)	PI(kW)	HC(kW)	PI(kW)	HC(kW)	PI(kW)	HC(kW)	PI(kW)	HC(kW)	PI(kW)	HC(kW)	PI(kW)	HC(kW)	PI(kW)
AEX140ED*HA/EU	-20	11.32	3.91	10.95	4.38	10.57	4.84	10.19	5.31						
	-15	12.41	3.97	12.00	4.45	11.58	4.92	11.17	5.40	10.76	5.87				
	-10	13.50	4.04	13.05	4.52	12.60	5.00	12.15	5.48	11.70	5.96	11.25	6.45	10.80	6.93
	-7	14.15	4.07	13.68	4.56	13.21	5.05	12.74	5.53	12.27	6.02	11.79	6.51	11.32	6.99
	-2	15.03	3.68	14.53	4.13	14.03	4.57	13.53	5.01	13.03	5.45	12.53	5.89	12.03	6.33
	2	14.20	3.12	13.73	3.49	13.26	3.87	12.78	4.24	12.31	4.61	11.84	4.99	11.36	5.36
	7	15.00	2.51	14.50	2.81	14.00	3.11	13.50	3.41	13.00	3.71	12.50	4.01	12.00	4.31
	10	15.70	2.53	15.20	2.83	14.70	3.13	14.20	3.43	13.70	3.73	13.20	4.03	12.70	4.33
	15	16.87	2.56	16.37	2.86	15.87	3.16	15.37	3.46	14.87	3.76	14.37	4.06	13.87	4.36
	20	18.03	2.60	17.53	2.90	17.03	3.20	16.53	3.50	16.03	3.80	15.53	4.10	15.03	4.40
	LWT (℃)	25		30		35		40		45		50		55	
	Tamb (℃)	HC(kW)	PI(kW)	HC(kW)	PI(kW)	HC(kW)	PI(kW)	HC(kW)	PI(kW)	HC(kW)	PI(kW)	HC(kW)	PI(kW)	HC(kW)	PI(kW)
AEX160ED*HA/EU	-20	12.83	4.73	12.45	5.27	12.08	5.81	11.70	6.35						
	-15	14.07	4.81	13.65	5.36	13.24	5.91	12.83	6.45	12.41	7.00				
	-10	15.30	4.89	14.85	5.44	14.40	6.00	13.95	6.56	13.50	7.11	13.05	7.67	12.60	8.23
	-7	16.04	4.93	15.57	5.49	15.10	6.06	14.63	6.62	14.15	7.18	13.68	7.74	13.21	8.30
	-2	17.06	4.47	16.56	4.98	16.06	5.49	15.55	5.99	15.05	6.50	14.55	7.01	14.05	7.52
	2	16.15	3.79	15.68	4.22	15.20	4.66	14.73	5.09	14.25	5.52	13.78	5.95	13.30	6.38
	7	17.00	3.03	16.50	3.38	16.00	3.72	15.50	4.07	15.00	4.41	14.50	4.76	14.00	5.10
	10	17.90	3.05	17.40	3.40	16.90	3.74	16.40	4.09	15.90	4.43	15.40	4.78	14.90	5.12
	15	19.40	3.08	18.90	3.43	18.40	3.77	17.90	4.12	17.40	4.46	16.90	4.81	16.40	5.15
	20	20.90	3.12	20.40	3.46	19.90	3.81	19.40	4.15	18.90	4.50	18.40	4.84	17.90	5.19

1. Heating capacity : Capacity is according to Eurovent rating standard 6/C/003-2006 and valid for heated water range △t = 3～8°C
2. Cooling capacity : Capacity is according to Eurovent rating standard 6/C/003-2006 and valid for chilled water range △t = 3～8°C
3. Power input : Power input is according to Eurovent rating standard 6/C/003-2006.
4. Peak value : Tested without defrost operation in accordance with EN14511
5. Integrated value : Tested with defrost operation in accordance with EN14511

2. Capacity Tables

2-1. AEX060/100/125/140/160ED*HA

2) Maximum Heating Capacity (Integrated Value)

LWT (Leaving Water Temp.), Tamb (Ambient Temp.), HC (Heating Capacity), PI (Power input)

	LWT (℃)	25		30		35		40		45		50		55	
	Tamb (℃)	HC(kW)	PI(kW)	HC(kW)	PI(kW)	HC(kW)	PI(kW)	HC(kW)	PI(kW)	HC(kW)	PI(kW)	HC(kW)	PI(kW)	HC(kW)	PI(kW)
AEX060EDEHA/EU	-20	4.43	1.59	4.26	1.80	4.10	2.01	3.93	2.22						
	-15	4.86	1.62	4.67	1.83	4.49	2.04	4.31	2.25	4.12	2.47				
	-10	5.28	1.64	5.08	1.86	4.88	2.07	4.68	2.29	4.48	2.50	4.28	2.72	4.08	2.94
	-7	5.54	1.66	5.33	1.87	5.12	2.09	4.91	2.31	4.70	2.53	4.49	2.75	4.28	2.96
	-2	5.21	1.34	5.02	1.53	4.84	1.72	4.65	1.91	4.47	2.11	4.28	2.30	4.10	2.49
	2	4.48	1.02	4.33	1.17	4.18	1.33	4.02	1.49	3.87	1.64	3.72	1.80	3.57	1.96
	7	6.30	0.95	6.05	1.09	5.80	1.22	5.55	1.36	5.30	1.49	5.05	1.63	4.80	1.76
	10	6.52	0.97	6.27	1.11	6.02	1.24	5.77	1.38	5.52	1.51	5.27	1.65	5.02	1.78
	15	6.89	1.00	6.64	1.14	6.39	1.27	6.14	1.41	5.89	1.54	5.64	1.68	5.39	1.81
	20	7.25	1.04	7.00	1.17	6.75	1.31	6.50	1.44	6.25	1.58	6.00	1.71	5.75	1.85
	LWT (℃)	25		30		35		40		45		50		55	
	Tamb (℃)	HC(kW)	PI(kW)	HC(kW)	PI(kW)	HC(kW)	PI(kW)	HC(kW)	PI(kW)	HC(kW)	PI(kW)	HC(kW)	PI(kW)	HC(kW)	PI(kW)
AEX100EDEHA/EU	-20	7.78	3.07	7.37	3.31	6.97	3.56	6.56	3.80						
	-15	8.53	3.12	8.08	3.37	7.64	3.61	7.19	3.86	6.75	4.11				
	-10	9.28	3.17	8.79	3.42	8.31	3.67	7.82	3.92	7.34	4.17	6.85	4.42	6.37	4.67
	-7	9.73	3.20	9.22	3.45	8.71	3.70	8.20	3.96	7.69	4.21	7.19	4.46	6.68	4.71
	-2	9.44	2.64	8.98	2.86	8.52	3.09	8.06	3.32	7.61	3.55	7.15	3.78	6.69	4.01
	2	8.54	2.09	8.15	2.28	7.76	2.48	7.36	2.67	6.97	2.87	6.58	3.06	6.18	3.26
	7	10.50	1.69	10.25	1.96	10.00	2.22	9.75	2.49	9.50	2.75	9.25	3.02	9.00	3.28
	10	11.10	1.77	10.85	2.04	10.60	2.30	10.35	2.57	10.10	2.83	9.85	3.10	9.60	3.36
	15	12.10	1.90	11.85	2.17	11.60	2.43	11.35	2.70	11.10	2.96	10.85	3.23	10.60	3.49
	20	13.10	2.04	12.85	2.30	12.60	2.57	12.35	2.83	12.10	3.10	11.85	3.36	11.60	3.63
	LWT (℃)	25		30		35		40		45		50		55	
	Tamb (℃)	HC(kW)	PI(kW)	HC(kW)	PI(kW)	HC(kW)	PI(kW)	HC(kW)	PI(kW)	HC(kW)	PI(kW)	HC(kW)	PI(kW)	HC(kW)	PI(kW)
AEX125ED*HA/EU	-20	9.06	3.18	8.65	3.59	8.25	4.01	7.84	4.43						
	-15	9.93	3.23	9.48	3.65	9.04	4.08	8.59	4.50	8.15	4.93				
	-10	10.80	3.28	10.32	3.71	9.83	4.14	9.35	4.57	8.86	5.00	8.38	5.44	7.89	5.87
	-7	11.32	3.31	10.81	3.75	10.31	4.18	9.80	4.62	9.29	5.05	8.78	5.49	8.27	5.92
	-2	10.98	2.85	10.53	3.24	10.08	3.62	9.63	4.01	9.18	4.40	8.72	4.78	8.27	5.17
	2	9.74	2.31	9.37	2.63	8.99	2.95	8.62	3.28	8.24	3.60	7.87	3.92	7.49	4.24
	7	13.50	2.13	13.00	2.39	12.50	2.66	12.00	2.93	11.50	3.20	11.00	3.46	10.50	3.73
	10	14.10	2.15	13.60	2.41	13.10	2.68	12.60	2.95	12.10	3.22	11.60	3.48	11.10	3.75
	15	15.10	2.18	14.60	2.45	14.10	2.71	13.60	2.98	13.10	3.25	12.60	3.52	12.10	3.78
	20	16.10	2.21	15.60	2.48	15.10	2.75	14.60	3.01	14.10	3.28	13.60	3.55	13.10	3.82
	LWT (℃)	25		30		35		40		45		50		55	
	Tamb (℃)	HC(kW)	PI(kW)	HC(kW)	PI(kW)	HC(kW)	PI(kW)	HC(kW)	PI(kW)	HC(kW)	PI(kW)	HC(kW)	PI(kW)	HC(kW)	PI(kW)
AEX140ED*HA/EU	-20	10.45	3.82	9.96	4.22	9.46	4.63	8.97	5.04						
	-15	11.46	3.88	10.92	4.29	10.37	4.71	9.83	5.12	9.29	5.53				
	-10	12.46	3.94	11.87	4.36	11.28	4.78	10.70	5.20	10.11	5.62	9.52	6.04	8.93	6.46
	-7	13.06	3.98	12.45	4.40	11.83	4.83	11.21	5.25	10.60	5.67	9.98	6.09	9.36	6.52
	-2	12.57	3.42	12.02	3.80	11.47	4.17	10.92	4.55	10.37	4.93	9.83	5.30	9.28	5.68
	2	11.15	2.78	10.69	3.09	10.23	3.41	9.77	3.72	9.31	4.04	8.85	4.35	8.39	4.67
	7	15.00	2.51	14.50	2.81	14.00	3.11	13.50	3.41	13.00	3.71	12.50	4.01	12.00	4.31
	10	15.70	2.53	15.20	2.83	14.70	3.13	14.20	3.43	13.70	3.73	13.20	4.03	12.70	4.33
	15	16.87	2.56	16.37	2.86	15.87	3.16	15.37	3.46	14.87	3.76	14.37	4.06	13.87	4.36
	20	18.03	2.60	17.53	2.90	17.03	3.20	16.53	3.50	16.03	3.80	15.53	4.10	15.03	4.40
	LWT (℃)	25		30		35		40		45		50		55	
	Tamb (℃)	HC(kW)	PI(kW)	HC(kW)	PI(kW)	HC(kW)	PI(kW)	HC(kW)	PI(kW)	HC(kW)	PI(kW)	HC(kW)	PI(kW)	HC(kW)	PI(kW)
AEX160ED*HA/EU	-20	11.85	4.56	11.26	4.97	10.68	5.38	10.10	5.79						
	-15	12.98	4.64	12.35	5.05	11.71	5.47	11.07	5.88	10.44	6.29				
	-10	14.12	4.71	13.43	5.13	12.74	5.55	12.05	5.97	11.35	6.39	10.66	6.81	9.97	7.24
	-7	14.81	4.76	14.08	5.18	13.35	5.60	12.63	6.03	11.90	6.45	11.18	6.88	10.45	7.30
	-2	14.14	4.07	13.50	4.45	12.85	4.83	12.20	5.21	11.55	5.59	10.91	5.97	10.26	6.35
	2	12.49	3.30	11.94	3.62	11.40	3.94	10.86	4.26	10.32	4.57	9.77	4.89	9.23	5.21
	7	17.00	3.03	16.50	3.38	16.00	3.72	15.50	4.07	15.00	4.41	14.50	4.76	14.00	5.10
	10	17.90	3.05	17.40	3.40	16.90	3.74	16.40	4.09	15.90	4.43	15.40	4.78	14.90	5.12
	15	19.40	3.08	18.90	3.43	18.40	3.77	17.90	4.12	17.40	4.46	16.90	4.81	16.40	5.15
	20	20.90	3.12	20.40	3.46	19.90	3.81	19.40	4.15	18.90	4.50	18.40	4.84	17.90	5.19

1. Heating capacity : Capacity is according to Eurovent rating standard 6/C/003-2006 and valid for heated water range △t = 3～8°C
2. Cooling capacity : Capacity is according to Eurovent rating standard 6/C/003-2006 and valid for chilled water range △t = 3～8°C
3. Power input : Power input is according to Eurovent rating standard 6/C/003-2006.
4. Peak value : Tested without defrost operation in accordance with EN14511
5. Integrated value : Tested with defrost operation in accordance with EN14511

2. Capacity Tables

2-1. AEX060/100/125/140/160ED*HA

3) Maximum Cooling Capacity

LWT (Leaving Water Temp.), Tamb (Ambient Temp.), CC (Cooling Capacity), PI (Power input)

	LWT (℃)	7		10		13		15		18		26	
AEX060EDEHA/EU	Tamb (℃)	HC(kW)	PI(kW)	HC(kW)	PI(kW)	HC(kW)	PI(kW)	HC(kW)	PI(kW)	HC(kW)	PI(kW)	HC(kW)	PI(kW)
	10	6.01	1.38	6.49	1.41	6.98	1.43	7.30	1.45	7.78	1.48	8.91	1.54
	20	5.57	1.55	6.05	1.58	6.53	1.60	6.85	1.62	7.34	1.65	8.46	1.71
	30	5.12	1.72	5.60	1.75	6.09	1.78	6.41	1.79	6.89	1.82	8.02	1.88
	35	4.90	1.81	5.38	1.84	5.87	1.86	6.19	1.88	6.67	1.91	7.80	1.97
	46	4.41	2.00	4.89	2.03	5.38	2.05	5.70	2.07	6.18	2.09	7.31	2.15
AEX100EDEHA/EU	LWT (℃)	7		10		13		15		18		26	
	Tamb (℃)	HC(kW)	PI(kW)	HC(kW)	PI(kW)	HC(kW)	PI(kW)	HC(kW)	PI(kW)	HC(kW)	PI(kW)	HC(kW)	PI(kW)
	10	10.30	1.70	10.85	1.74	11.39	1.79	11.75	1.82	12.30	1.86	13.57	1.96
	20	9.02	2.11	9.57	2.16	10.11	2.20	10.47	2.23	11.02	2.27	12.29	2.37
	30	7.74	2.52	8.29	2.57	8.83	2.61	9.19	2.64	9.74	2.68	11.01	2.79
	35	7.10	2.73	7.65	2.77	8.19	2.82	8.55	2.85	9.10	2.89	10.37	2.99
	46	5.69	3.18	6.17	3.19	6.62	3.19	6.91	3.19	7.34	3.19	8.30	3.19
AEX125ED*HA/EU	LWT (℃)	7		10		13		15		18		26	
	Tamb (℃)	HC(kW)	PI(kW)	HC(kW)	PI(kW)	HC(kW)	PI(kW)	HC(kW)	PI(kW)	HC(kW)	PI(kW)	HC(kW)	PI(kW)
	10	15.00	2.50	16.01	2.57	17.02	2.63	17.69	2.67	18.70	2.74	21.05	2.89
	20	13.52	3.14	14.53	3.21	15.54	3.27	16.21	3.32	17.22	3.38	19.57	3.54
	30	12.04	3.79	13.05	3.85	14.06	3.92	14.73	3.96	15.74	4.03	18.09	4.18
	35	11.30	4.11	12.31	4.18	13.32	4.24	13.99	4.28	15.00	4.35	17.35	4.50
	46	6.95	3.46	7.57	3.46	8.17	3.46	8.57	3.46	9.15	3.46	10.44	3.46
AEX140ED*HA/EU	LWT (℃)	7		10		13		15		18		26	
	Tamb (℃)	HC(kW)	PI(kW)	HC(kW)	PI(kW)	HC(kW)	PI(kW)	HC(kW)	PI(kW)	HC(kW)	PI(kW)	HC(kW)	PI(kW)
	10	16.50	3.00	17.56	3.11	18.63	3.23	19.34	3.31	20.40	3.42	22.88	3.69
	20	14.82	3.69	15.88	3.81	16.95	3.92	17.66	4.00	18.72	4.11	21.20	4.38
	30	13.14	4.38	14.20	4.50	15.27	4.61	15.98	4.69	17.04	4.80	19.52	5.07
	35	12.30	4.73	13.36	4.84	14.43	4.96	15.14	5.04	16.20	5.15	18.68	5.42
	46	7.80	4.10	8.42	4.10	9.02	4.10	9.40	4.10	9.95	4.10	11.17	4.10
AEX160ED*HA/EU	LWT (℃)	7		10		13		15		18		26	
	Tamb (℃)	HC(kW)	PI(kW)	HC(kW)	PI(kW)	HC(kW)	PI(kW)	HC(kW)	PI(kW)	HC(kW)	PI(kW)	HC(kW)	PI(kW)
	10	17.50	3.70	18.62	3.86	19.74	4.02	20.48	4.12	21.60	4.28	24.21	4.65
	20	15.82	4.39	16.94	4.55	18.06	4.70	18.80	4.81	19.92	4.97	22.53	5.34
	30	14.14	5.08	15.26	5.23	16.38	5.39	17.12	5.50	18.24	5.66	20.85	6.03
	35	13.30	5.42	14.42	5.58	15.54	5.74	16.28	5.84	17.40	6.00	20.01	6.37
	46	8.44	4.55	9.03	4.55	9.59	4.55	9.95	4.55	10.47	4.55	11.60	4.55

1. Heating capacity is according to Eurovent rating standard 6/C/003-2006 and valid for heated water range △t = 3～8°C
2. Cooling capacity is according to Eurovent rating standard 6/C/003-2006 and valid for chilled water range △t = 3～8°C
3. Power input is total of indoor and outdoor unit, according to Eurovent rating standard 6/C/003-2006.

3. Capacity Correction

3-1. AEX060EDEHA

1) Heating

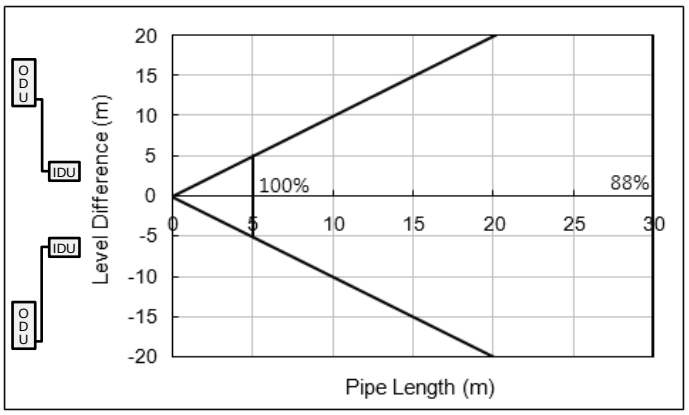

2) Cooling

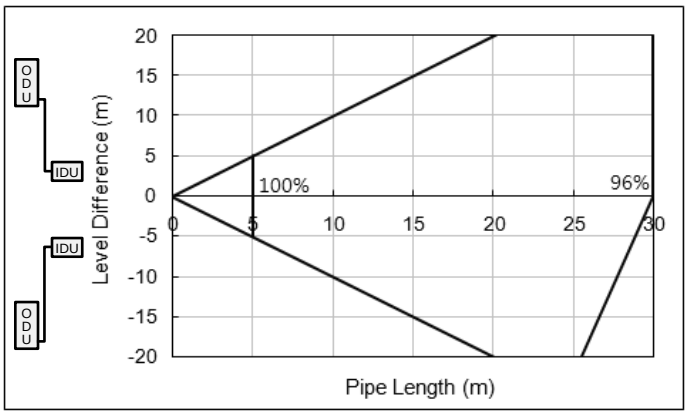

3-2. AEX100/125/140/160ED*HA

1) Heating

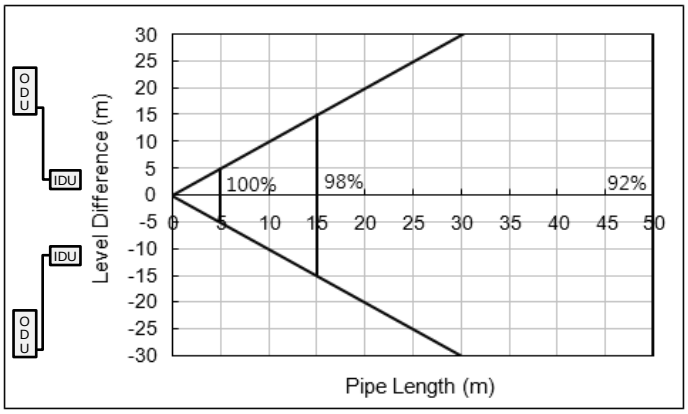

2) Cooling

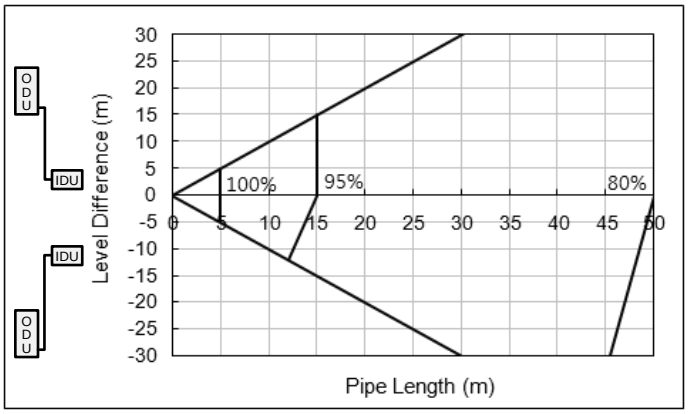

4. Dimensional Drawings

4-1. Outdoor Unit

1) AEX060EDEHA

(Unit : mm)

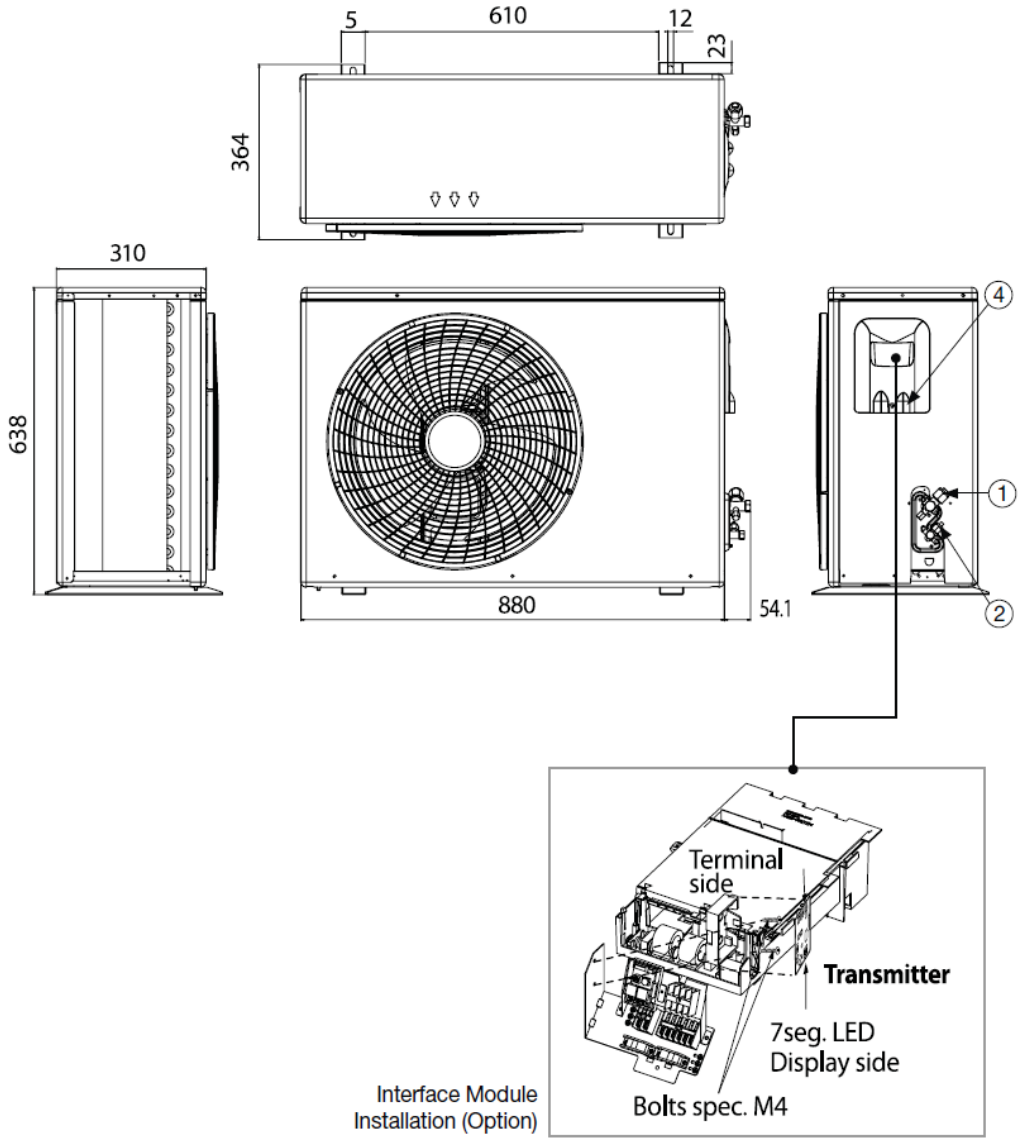

No.	Name		Description
			AEX060EDEHA
①	Gas Ref. Pipe	Φ, mm(inch)	15.88 (5/8)
②	Liquid Ref. Pipe	Φ, mm(inch)	6.35 (1/4)
③	Condensate Drain Holes	Φ, mm	20 x 1
④	Power & Communication Wiring Holes	Φ, mm	-

4. Dimensional Drawings

4-1. Outdoor Unit

2) AEX100EDEHA

(Unit : mm)

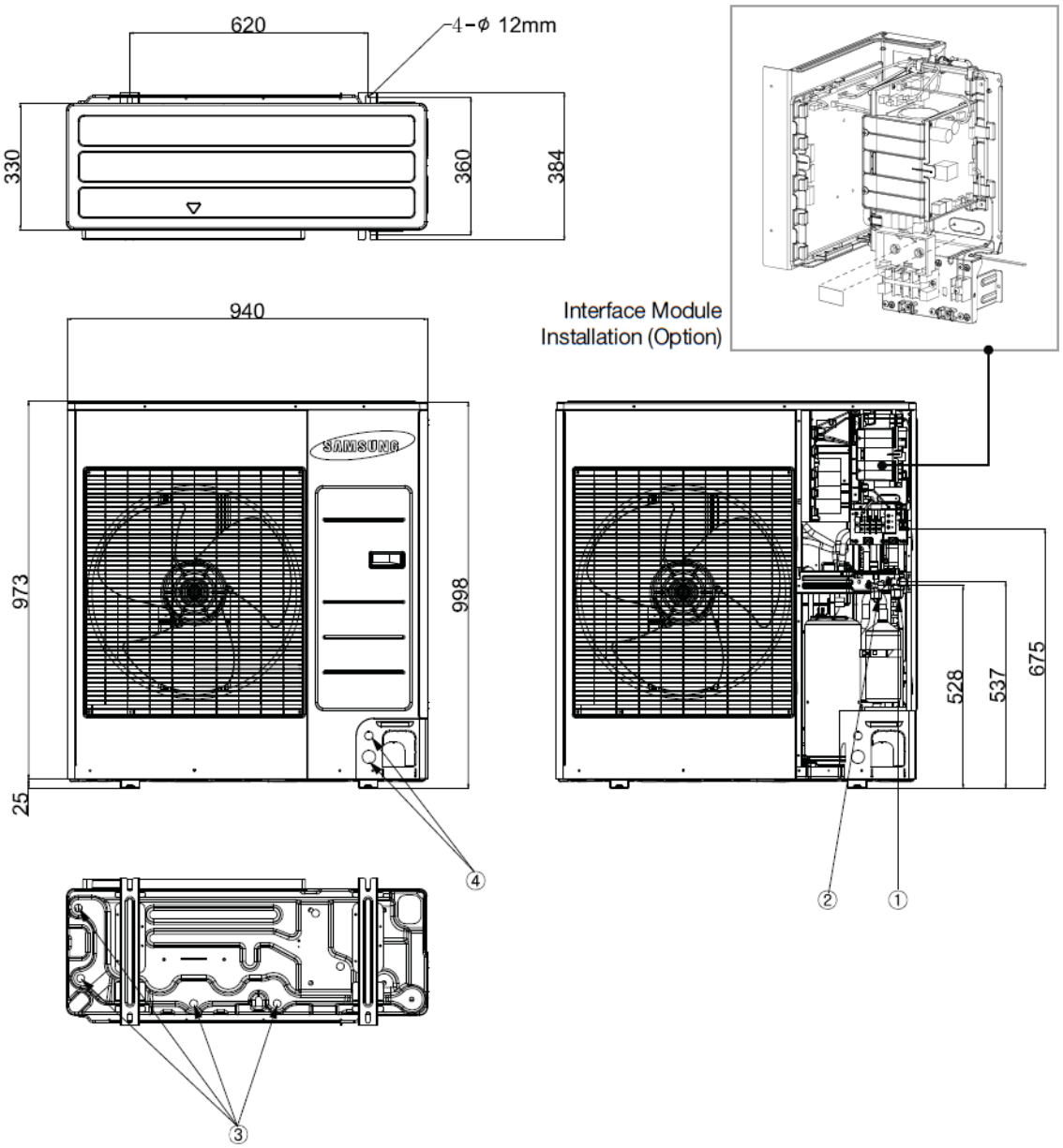

No.	Name		Description
			AEX100EDEHA
①	Gas Ref. Pipe	Φ, mm(inch)	15.88 (5/8)
②	Liquid Ref. Pipe	Φ, mm(inch)	9.52 (3/8)
③	Condensate Drain Holes	Φ, mm	20 x 4
④	Power & Communication Wiring Holes	Φ, mm	-

4. Dimensional Drawings

4-1. Outdoor Unit

3) AEX125/140/160ED*EH

(Unit : mm)

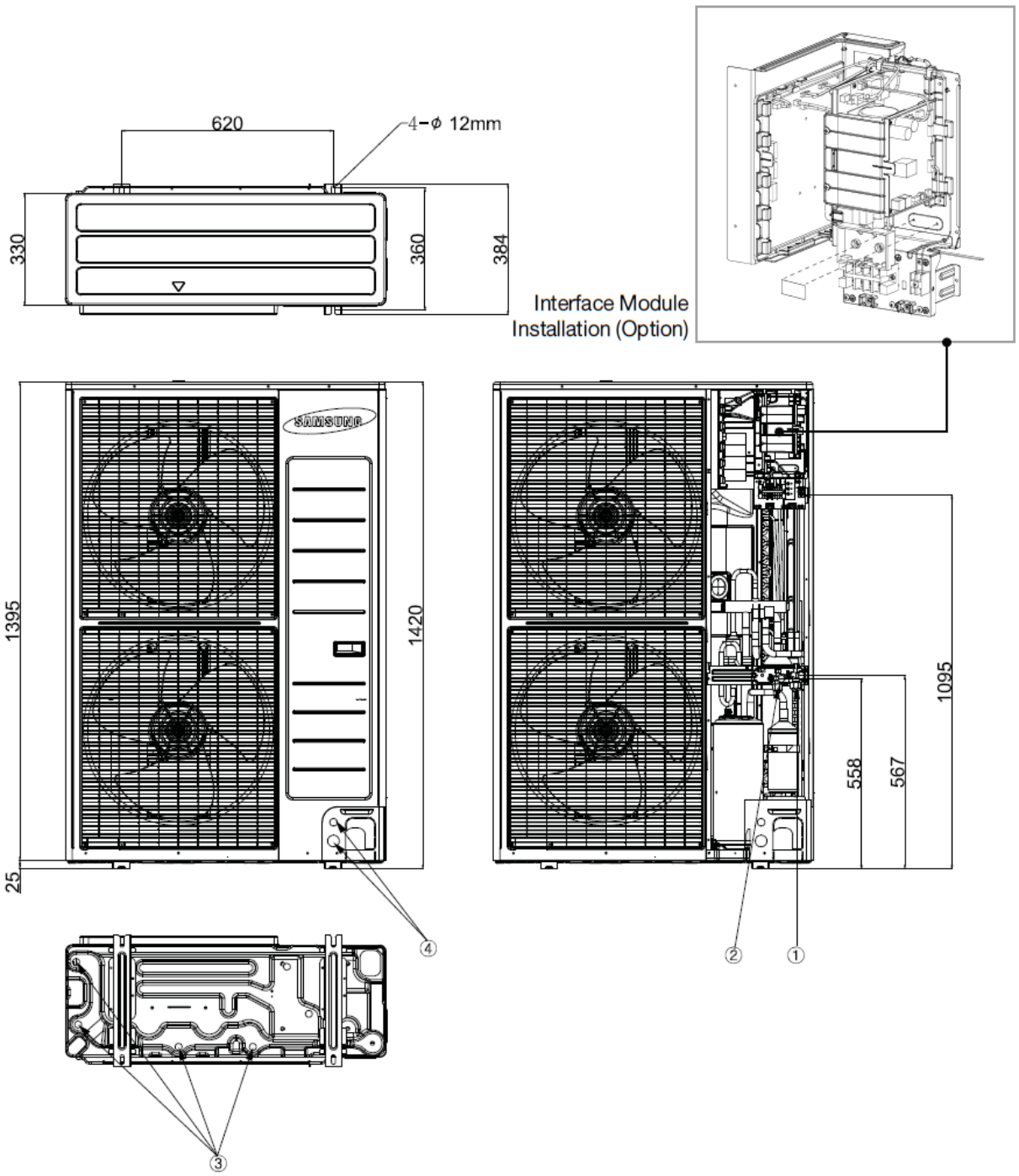

No.	Name		Description
			AEX125/140/160ED*HA
①	Gas Ref. Pipe	Φ, mm(inch)	15.88 (5/8)
②	Liquid Ref. Pipe	Φ, mm(inch)	9.52 (3/8)
③	Condensate Drain Holes	Φ, mm	20 x 4
④	Power & Communication Wiring Holes	Φ, mm	-

5. Piping Diagrams

5-1. Outdoor Unit

1) AEX060/100/125/140/160ED*HA

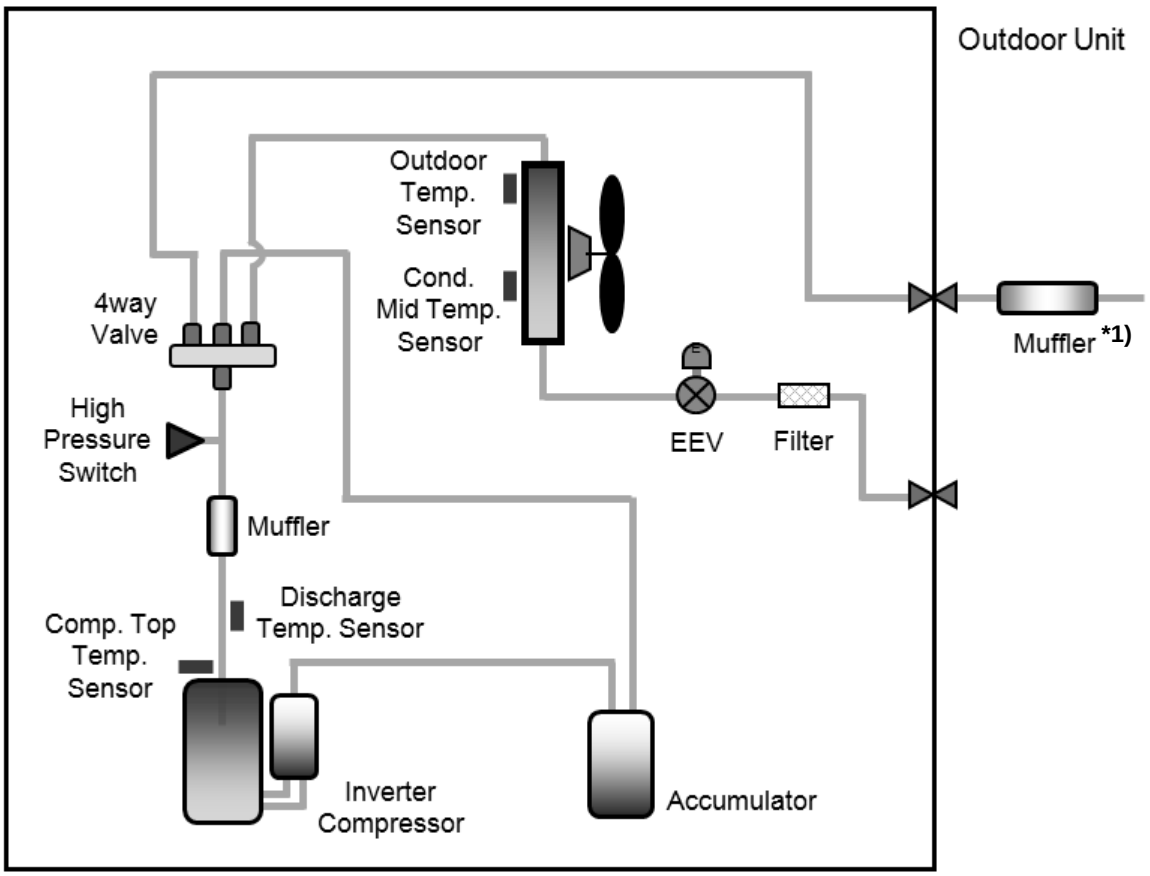

*1) AEX125/140/160ED*HA models.

6. Wiring Diagrams

6-1. Outdoor Unit

1) AEX060EDEHA

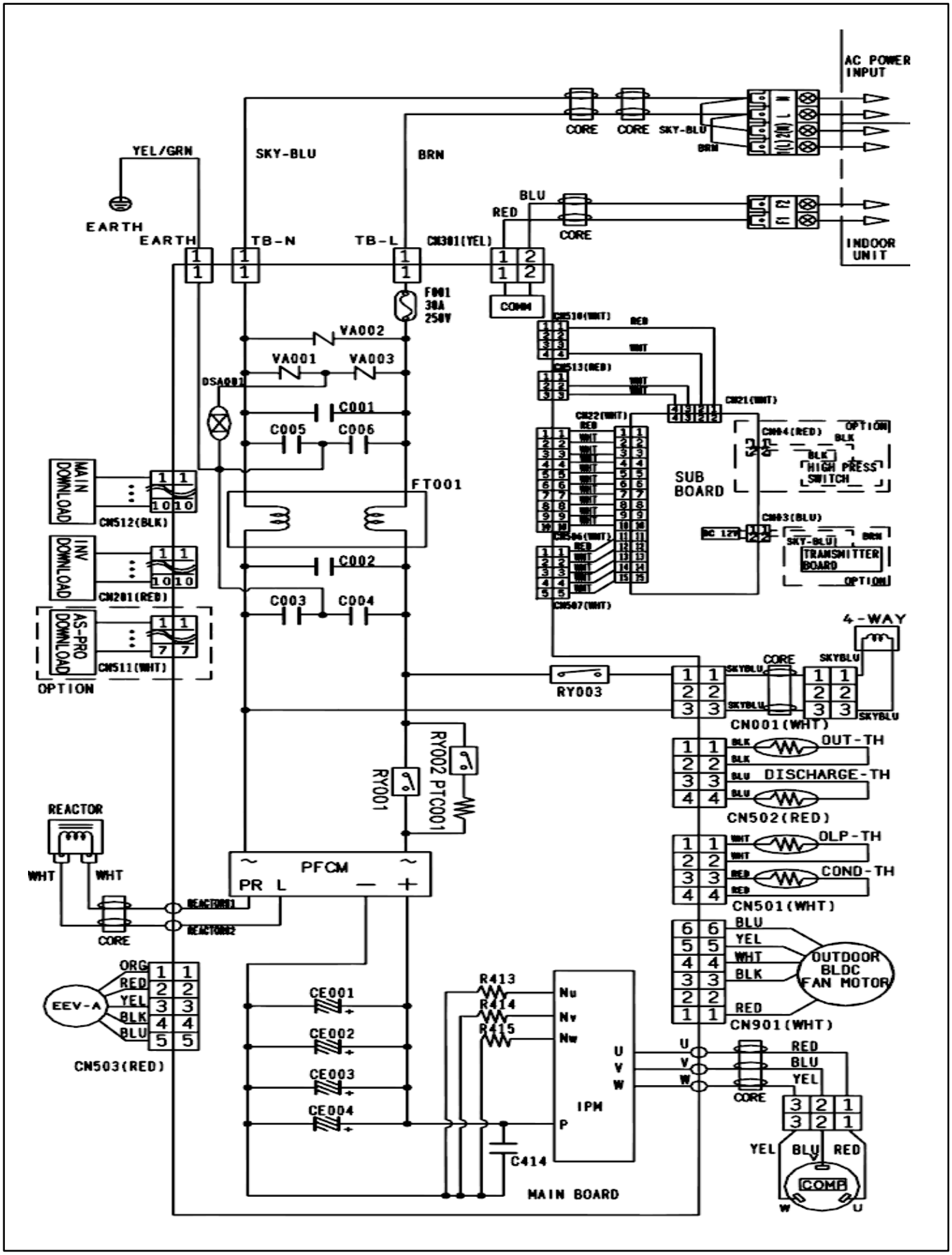

6. Wiring Diagrams

6-1. Outdoor Unit

2) AEX100EDEHA

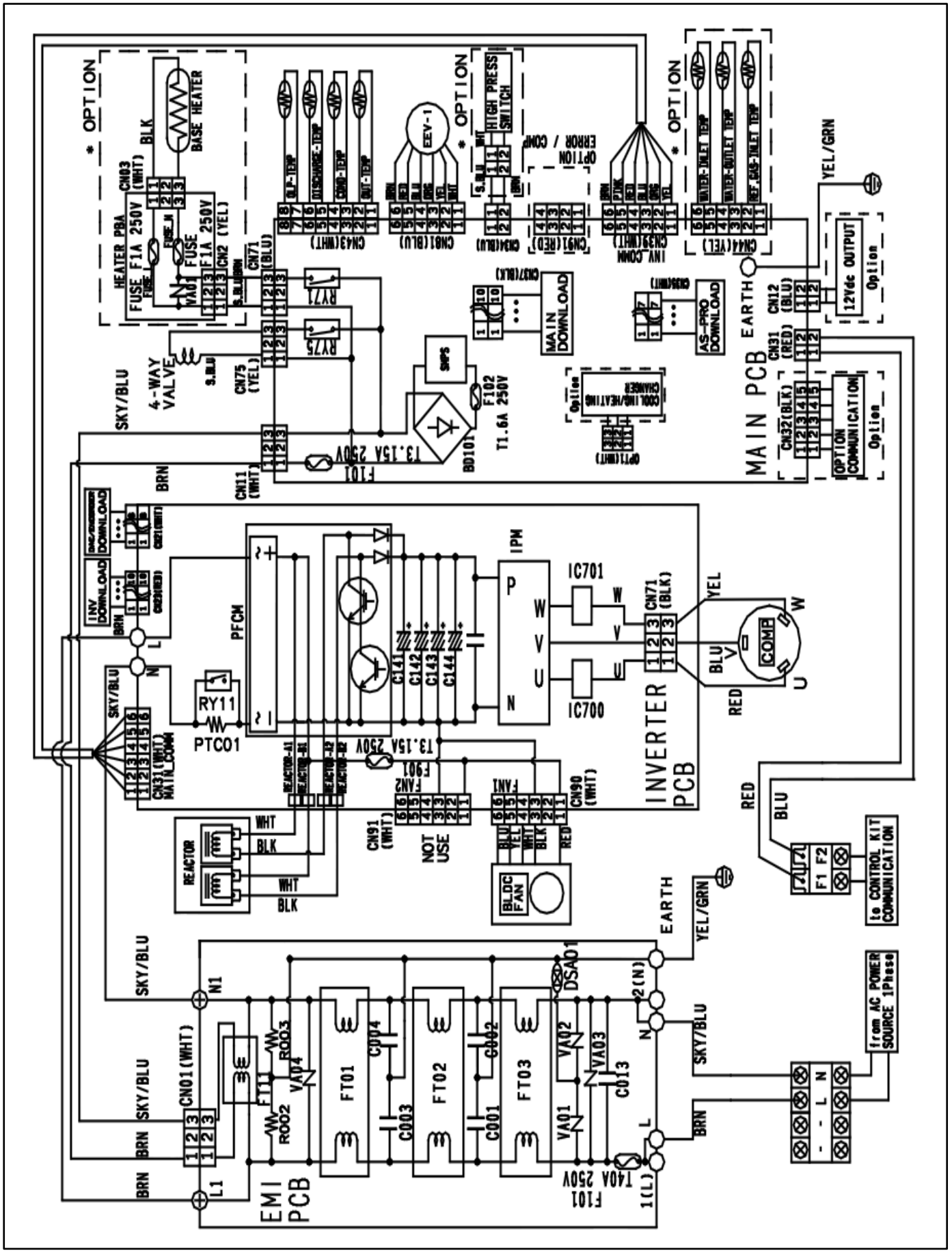

6. Wiring Diagrams

6-1. Outdoor Unit

3) AEX125/140/160EDEHA

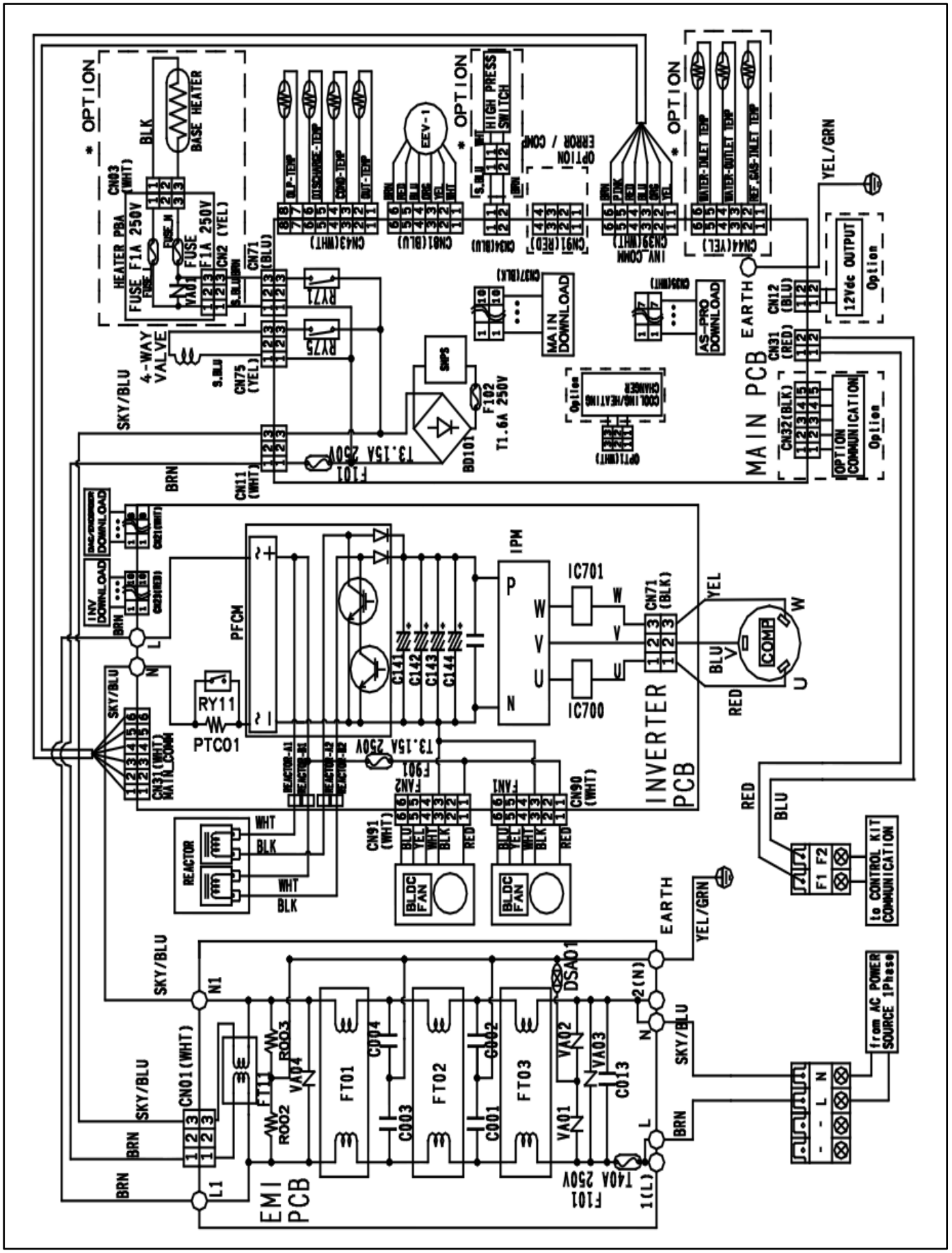

6. Wiring Diagrams

6-1. Outdoor Unit

4) AEX125/140/160EDGHA

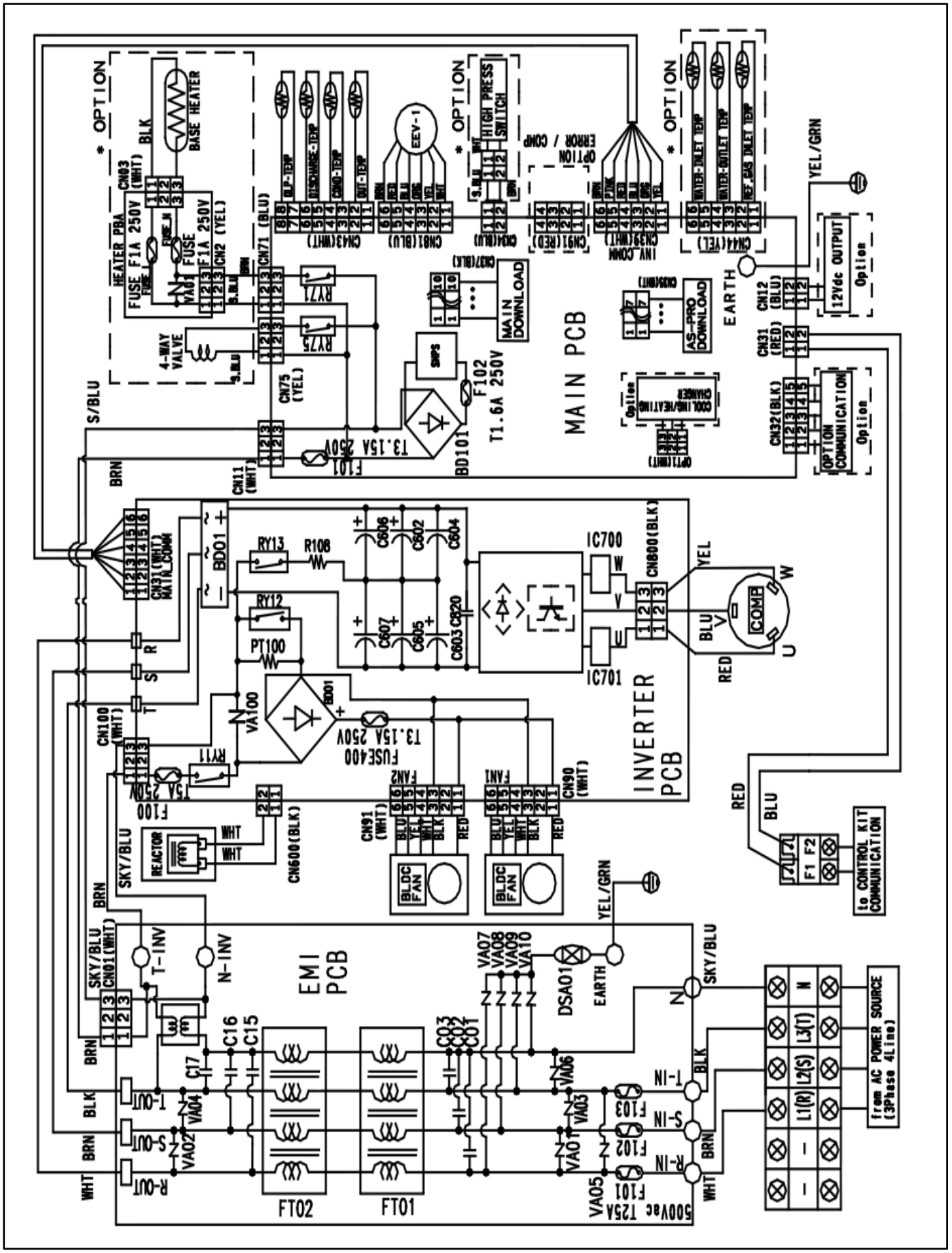

7. Electric Specifications

7-1. Outdoor Unit

1) Power Supply (Single Phase)

Outdoor Unit	Rated		Voltage Range		MCA	MFA	Fuse Cut-off Current (Total Fuse in Unit)
	Hz	Volts	Min.	Max.			
AEX060EDEHA	50	220-240	198	264	20	25.0	40
AEX100EDEHA	50	220-240	198	264	22	27.5	40
AEX125EDEHA	50	220-240	198	264	28	35.0	40
AEX140EDEHA	50	220-240	198	264	30	37.5	40
AEX160EDEHA	50	220-240	198	264	32	40.0	40

2) Power Supply (3 Phase)

Outdoor Unit	Rated		Voltage Range		MCA	MFA	Fuse Cut-off Current (Total Fuse in Unit)
	Hz	Volts	Min.	Max.			
AEX125EDGHA	50	380-415	342	457	10	12.5	25
AEX140EDGHA	50	380-415	342	457	11	13.8	25
AEX160EDGHA	50	380-415	342	457	12	15.0	25

Note

- ◆ Power supply cords of parts of appliances for outdoor use shall not be lighter than polychloroprene sheathed flexible cord. (Code designation IEC : 60245 IEC 57 / CENELEC : H05RN-F)
- ◆ Select power supply cord based on MCA.
- ◆ MFA is used to select the circuit breaker and the ground fault circuit interrupter (earth leakage circuit breaker).
- ◆ MCA represents maximum input current.
- ◆ MFA represents capacity which may accept MCA.
- ◆ Communication cable specification : 0.75~1.5㎟, 2wires

※ Abbreviations
- MCA : Minimum Circuit Amps.(A)
- MFA : Maximum Fuse Amps.(A)

8. Sound Pressure Level

8-1. Operation Sound Level

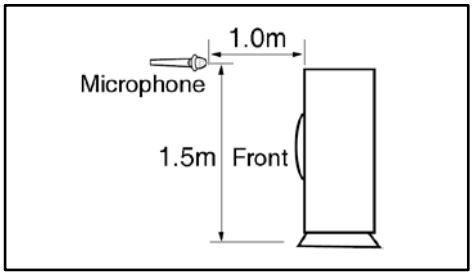

Unit (dB(A))

Model	Heating	Cooling
AEX060EDEHA	48	48
AEX100EDEHA	50	52
AEX125ED*HA	50	51
AEX140ED*HA	50	53
AEX160ED*HA	53	54

Note

- These operation sound value were obtained in an anechoic room. Sound pressure level will vary depending on a range of factors such as the construction of the particular room where the equipment is installed.
- Operation sound level may differ depending on operation and ambient conditions.

8-2. NC Curve

1) AEX060EDEHA

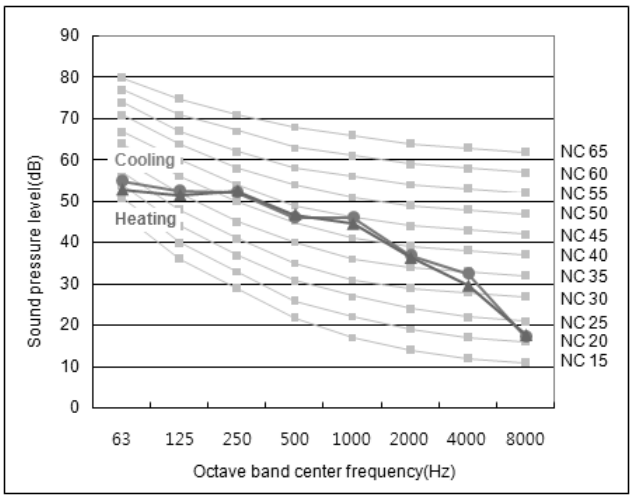

2) AEX100EDEHA

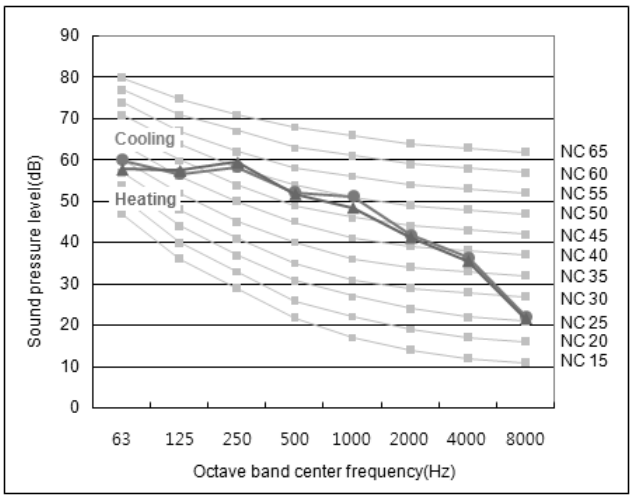

3) AEX125ED*HA

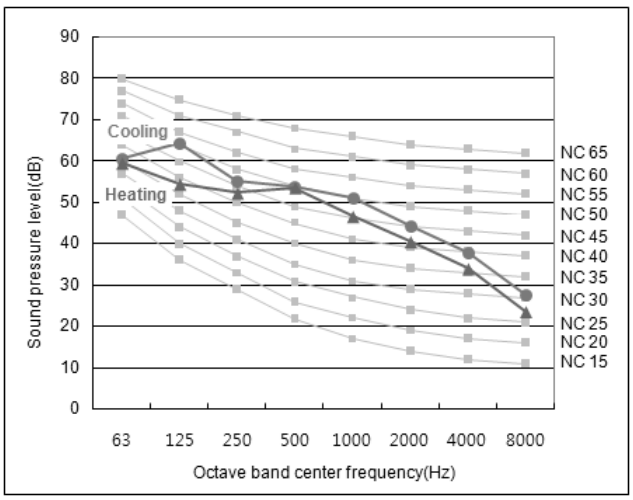

4) AEX140ED*HA

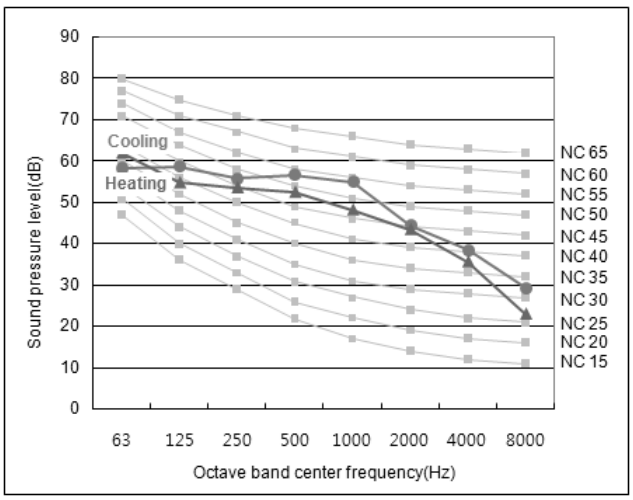

8. Sound Pressure Level

8-2. NC Curve

5) AEX160ED*HA

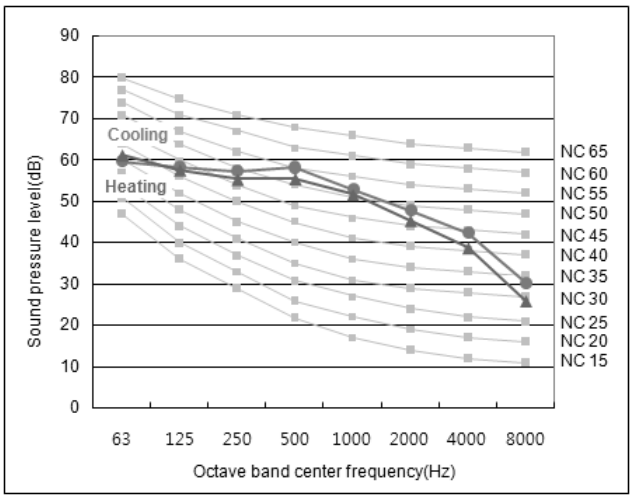

9. Operation Range

9-1. Outdoor Unit

1) Cooling

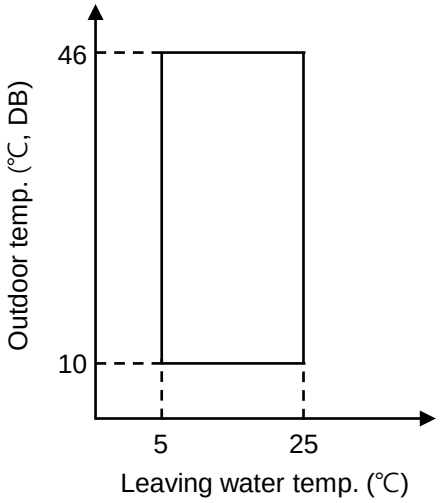

2) Heating

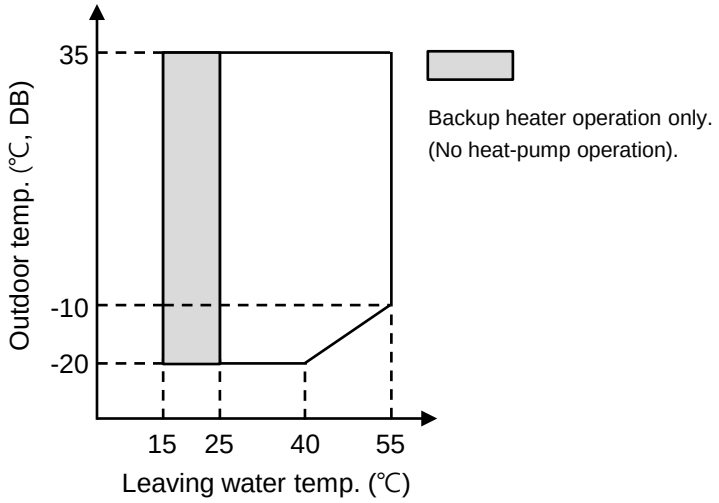

MONO Outdoor Unit		Water Temp. (℃)			Water Flow Rates (LPM)			Air Temp. (℃, DB/WB)		
		Min	Std	Max	Min	Std	Max	Min	Std	Max
Controller	Cooling	5	-	25						
	Heating	15	-	55						
Cooling	Inlet	-	23 (12*2)	30	16 (12*1)	Δ 5℃	58 (48*1)	10/-	35/24	46/28
	Outlet	5	18 (7*2)	25						
Heating	Inlet	5	30 (40*2)	-				-20/-	7/6 (-7/-8*3)	35/24
	Outlet	25 (15*4)	35 (45*2)	55						

*1) AEX060/100EDEHA model.
*2) Eurovent Test Condition #2
*3) NF PAC Low Temp. Heating Condition.
*4) Back up heater operation only.

III. Hydro Unit

1. Specifications

1-1. Hydro Unit

Model Name				AEN080YDEHA/EU	AEN160YDEHA/EU	AEN160YDGHA/EU
Power Supply			Φ, #, V, Hz	1, 2, 220-240, 50	1, 2, 220-240, 50	3, 4, 380-415, 50
Performance	Nominal Capacity	Heating	W	5,200 / 10,000	12,500 / 14,000 / 16,000	12,500 / 14,000 / 16,000
		Cooling	W	5,000 / 9,000	11,200 / 12,500 / 14,000	11,200 / 12,500 / 14,000
	Leaving Water Temp. Range	Heating	°C	15~55 (H/P : 25~55)	15~55 (H/P : 25~55)	15~55 (H/P : 25~55)
		Cooling	°C	5~25	5~25	5~25
Water Side	Heat Exchanger	Type	-	Brazed Plate	Brazed Plate	Brazed Plate
		Quantity	-	1	1	1
	Required Water Pressure		bar	Max 3.0	Max 3.0	Max 3.0
	Required Flow Rate		LPM	Min 12.0	Min 16.0	Min 16.0
	Flow Switch		LPM	12 ± 1.5 (Magnetic, Decreasing)	16 ± 1.5 (Magnetic, Decreasing)	16 ± 1.5 (Magnetic, Decreasing)
	Piping Connections	In/Out	Φ, inch	1 1/4 (BSPP male)	1 1/4 (BSPP male)	1 1/4 (BSPP male)
Refrigerant Side	Piping Connections	Liquid	Φ, mm	9.52	9.52	9.52
			Φ, inch	3/8	3/8	3/8
		Gas	Φ, mm	15.88	15.88	15.88
			Φ, inch	5/8	5/8	5/8
Hydro Unit Parts	Water Pump	Flow Rate	kg/min	17.0 / 20.5 / 23.0	31.5 / 40.1 / 45.9	31.5 / 40.1 / 45.9
		E.S.P	kPa	53.0 / 51.0 / 45.0	64.0 / 59.0 / 54.0	64.0 / 59.0 / 54.0
	Electric Heater	Input Power	W	4,000	6,000	6,000
	Expansion Vessel	Volume	Liter	8	8	8
	Pressure Relief Valve	Relief Pressure	bar	2.9	2.9	2.9
	Air Purge Valve	Size	Φ, inch	3/8 (BSPP male)	3/8 (BSPP male)	3/8 (BSPP male)
	Service Valve	Size	Φ, inch	1 1/4 (BSPP male)	1 1/4 (BSPP male)	1 1/4 (BSPP male)
External Dimension	Weight	Net	kg	45	48	48
		Gross	kg	55	58	58
	Dimensions (WxHxD)	Net	mm	510 x 850 x 315	510 x 850 x 315	510 x 850 x 315
		Gross	mm	564 x 1,024 x 412	564 x 1,024 x 412	564 x 1,024 x 412
External Control	Back up Boiler		-	230VAC 1A(DO)	230VAC 1A(DO)	230VAC 1A(DO)
	Room Thermostat		-	230VAC 1A(DI)	230VAC 1A(DI)	230VAC 1A(DI)
	Solar Pump		-	230VAC 1A(DI)	230VAC 1A(DI)	230VAC 1A(DI)
	Valves, 2 or 3way		-	230VAC 1A(DO)	230VAC 1A(DO)	230VAC 1A(DO)

2. Dimensional Drawings

2-1. Hydro Unit

1) AEN080/160YD*HA

(Unit : mm)

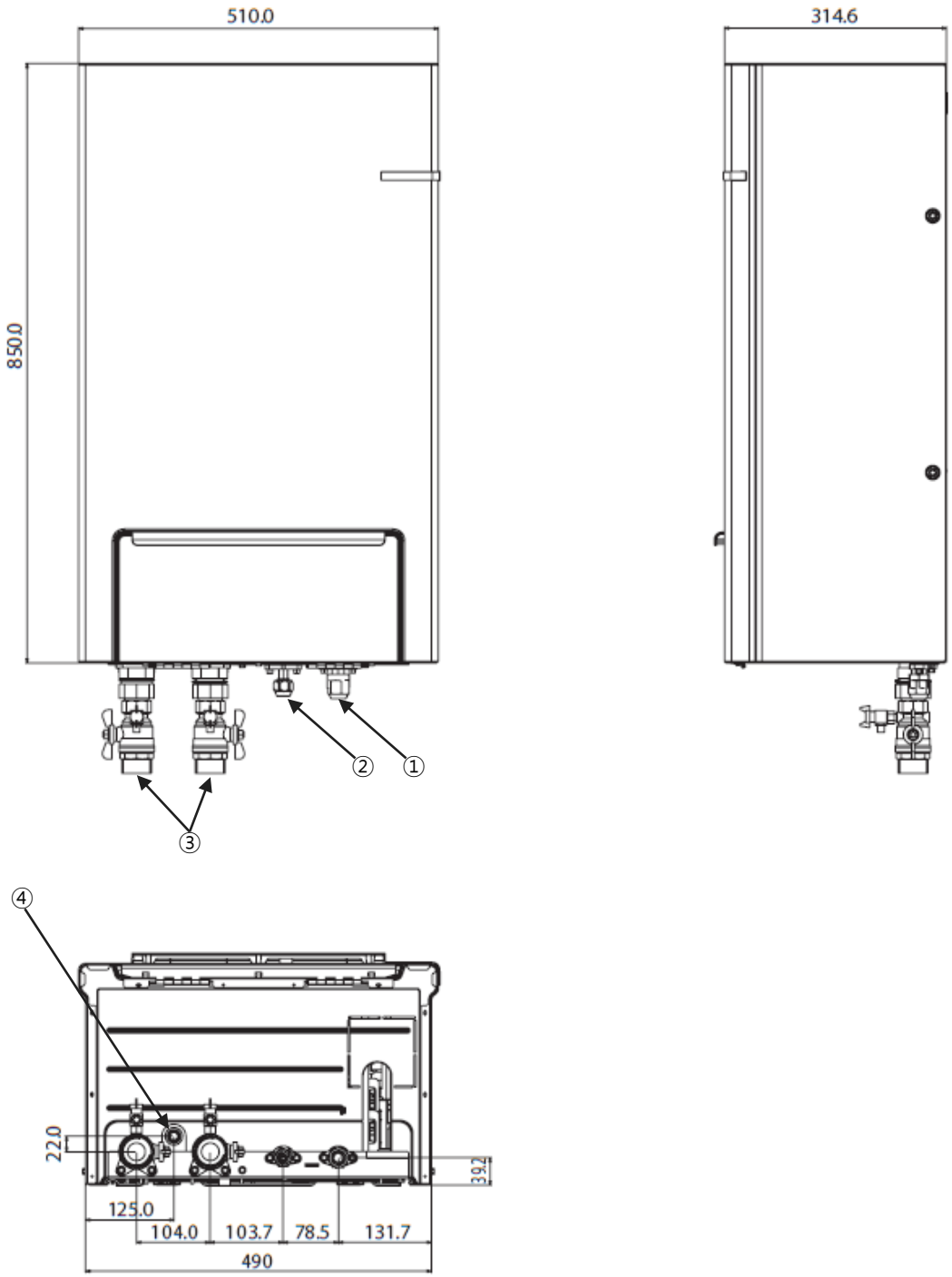

No.	Name		Description
			AEN080/160YD*HA
①	Gas Ref. Pipe	Φ, mm(inch)	15.88 (5/8)
②	Liquid Ref. Pipe	Φ, mm(inch)	9.52 (3/8)
③	Water Pipe (Inlet/Outlet)	Φ, inch	1 1/4 (BSPP male)
④	Drain Hose Connector	Φ, mm	OD 15.3

3. Piping Diagrams

3-1. Hydro Unit

1) AEN080/160YD*HA

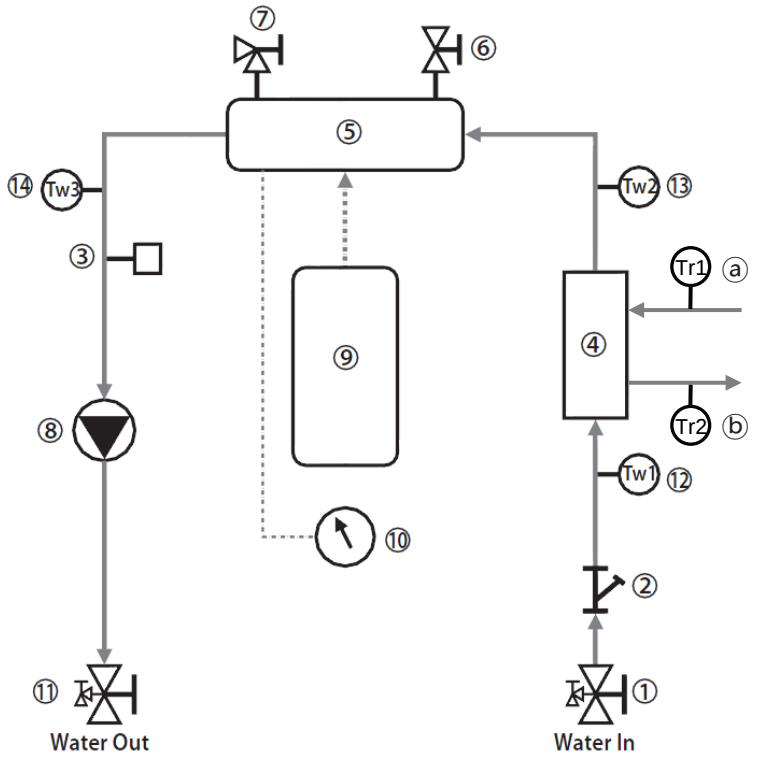

No.	Description
①	Water Pipe Service Valve (R)
②	Strainer
③	Flow Switch
④	Heat Changer
⑤	Backup Heater
⑥	Pressure Relief Valve
⑦	Air-vent
⑧	Water Pump
⑨	Expansion Tank
⑩	Manometer

No.	Description
⑪	Water Pipe Service Valve (L)
⑫	Water Temp. Sensor 1
⑬	Water Temp. Sensor 2
⑭	Water Temp. Sensor 3
ⓐ	Refrigerant Temp. Sensor 1
ⓑ	Refrigerant Temp. Sensor 2

4. Wiring Diagrams

4-1. Hydro Unit

1) AEN080/160YDEHA

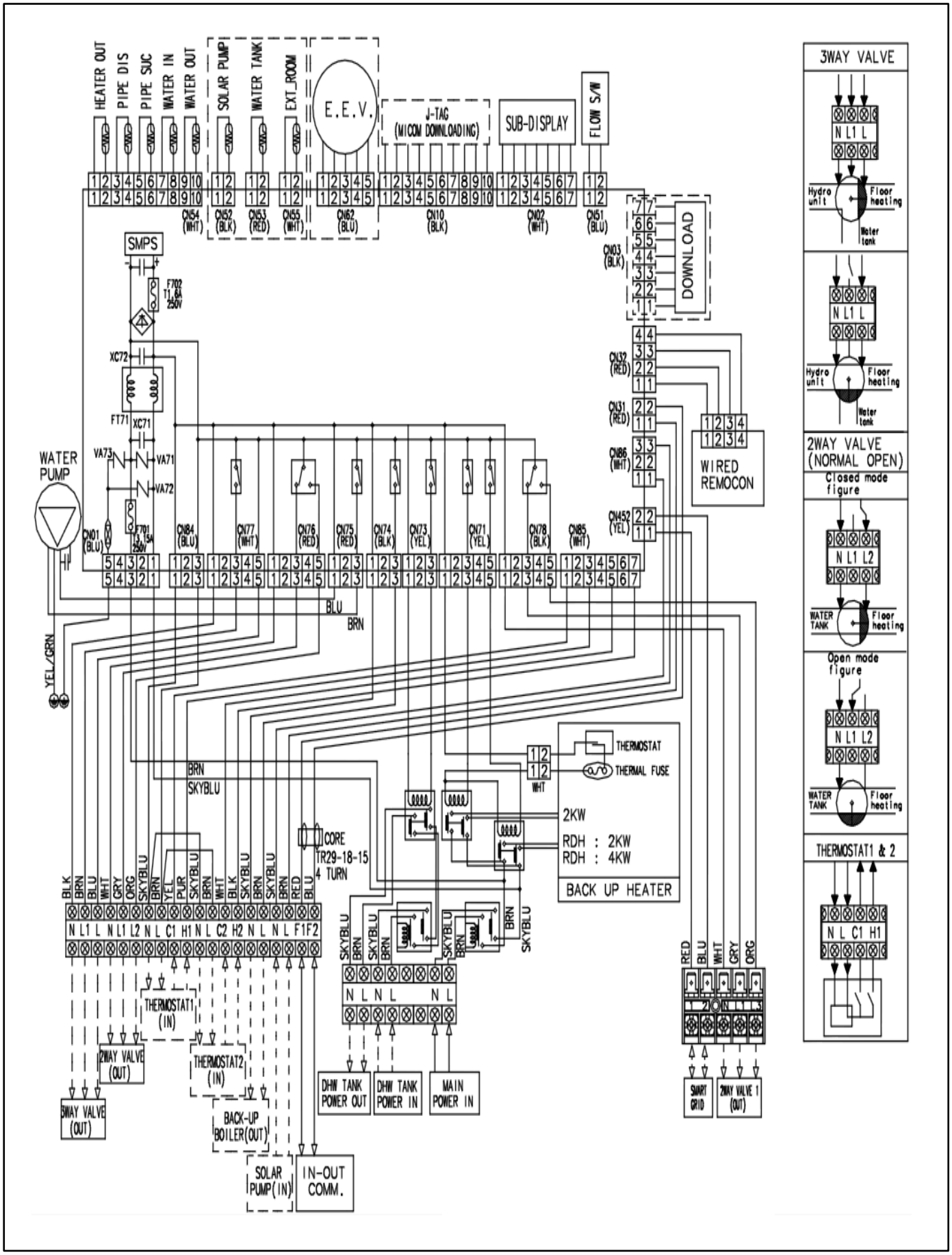

4. Wiring Diagrams

4-1. Hydro Unit

2) AEN160YDGHA

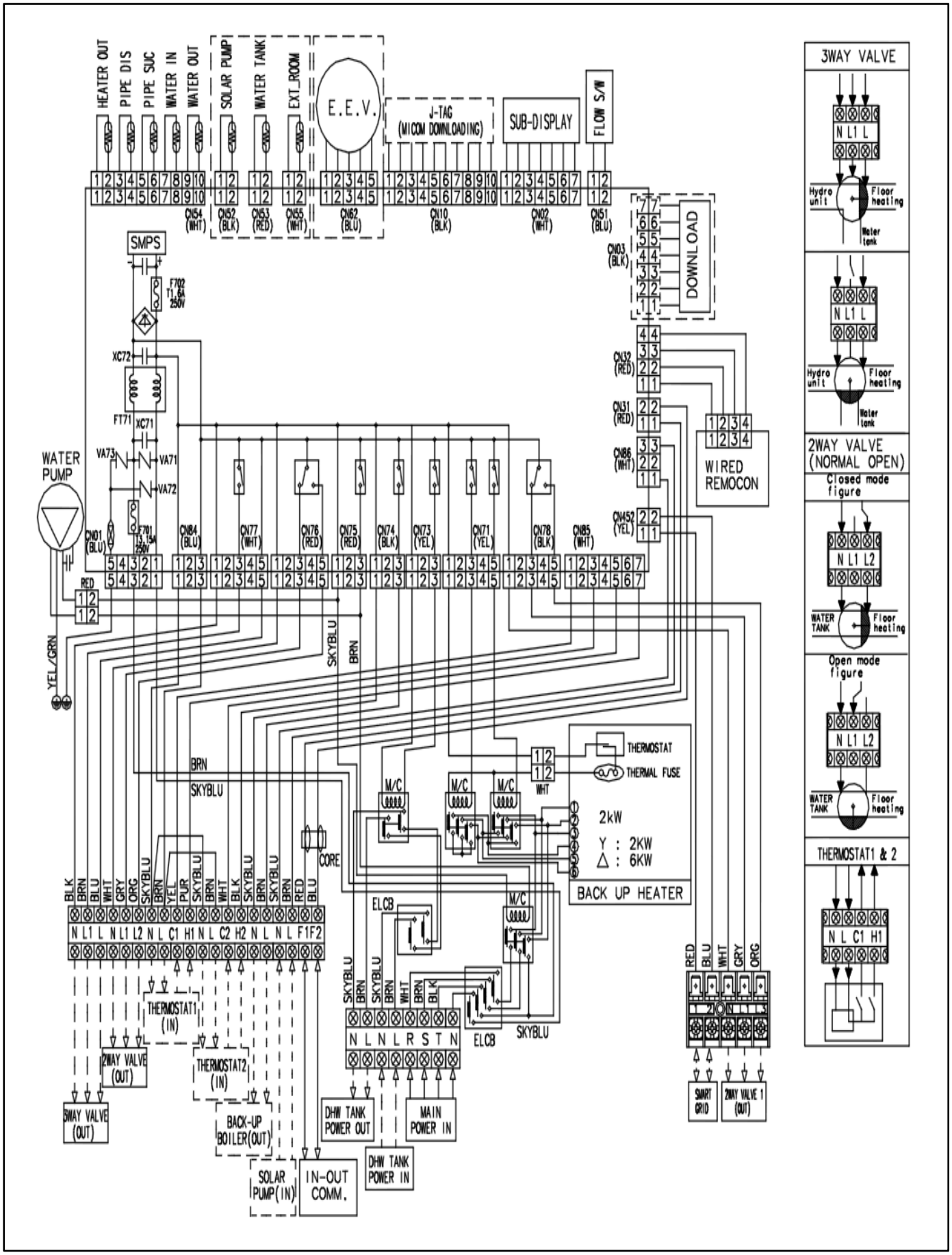

5. Electric Specifications

5-1. Hydro Unit

1) Power supply & Communication

Description	No. of wires	Max. A	Thickness	Supply Scope
Main power	2+ground	32A	4.0mm² H05RN-F or H07RN-F	Field supply (230V~, Input)
Communication	2	6A	0.75mm² H05RN-F or H07RN-F	7Vdc data

Communication cable connection

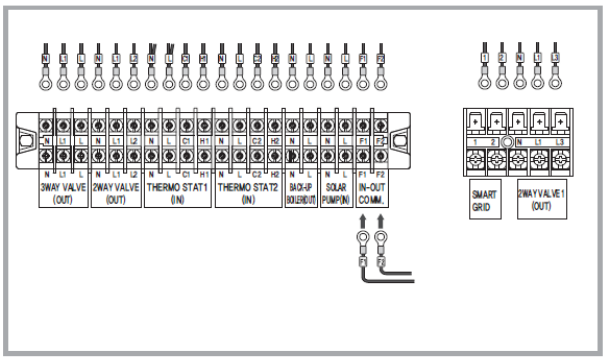

Power wire connection

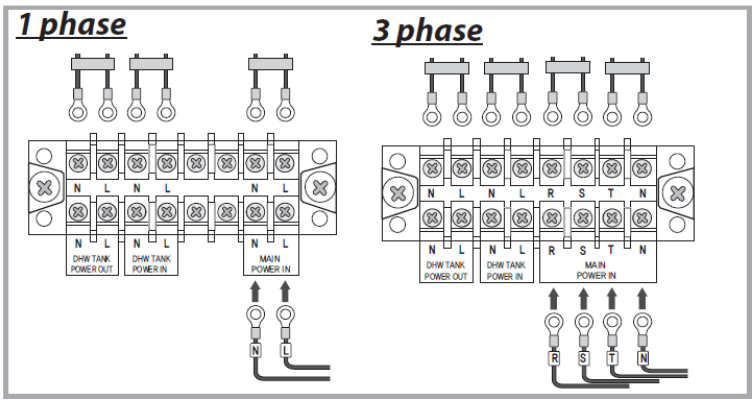

2) Back-up Heater Power supply

Model	Heater capacity (kW)	ELCB capacity (A)
AEN160YDGHA	6	20
AEN160YDEHA	6	40
AEN080YDEHA	4	30
DHW tank(200 or 300)	3	20

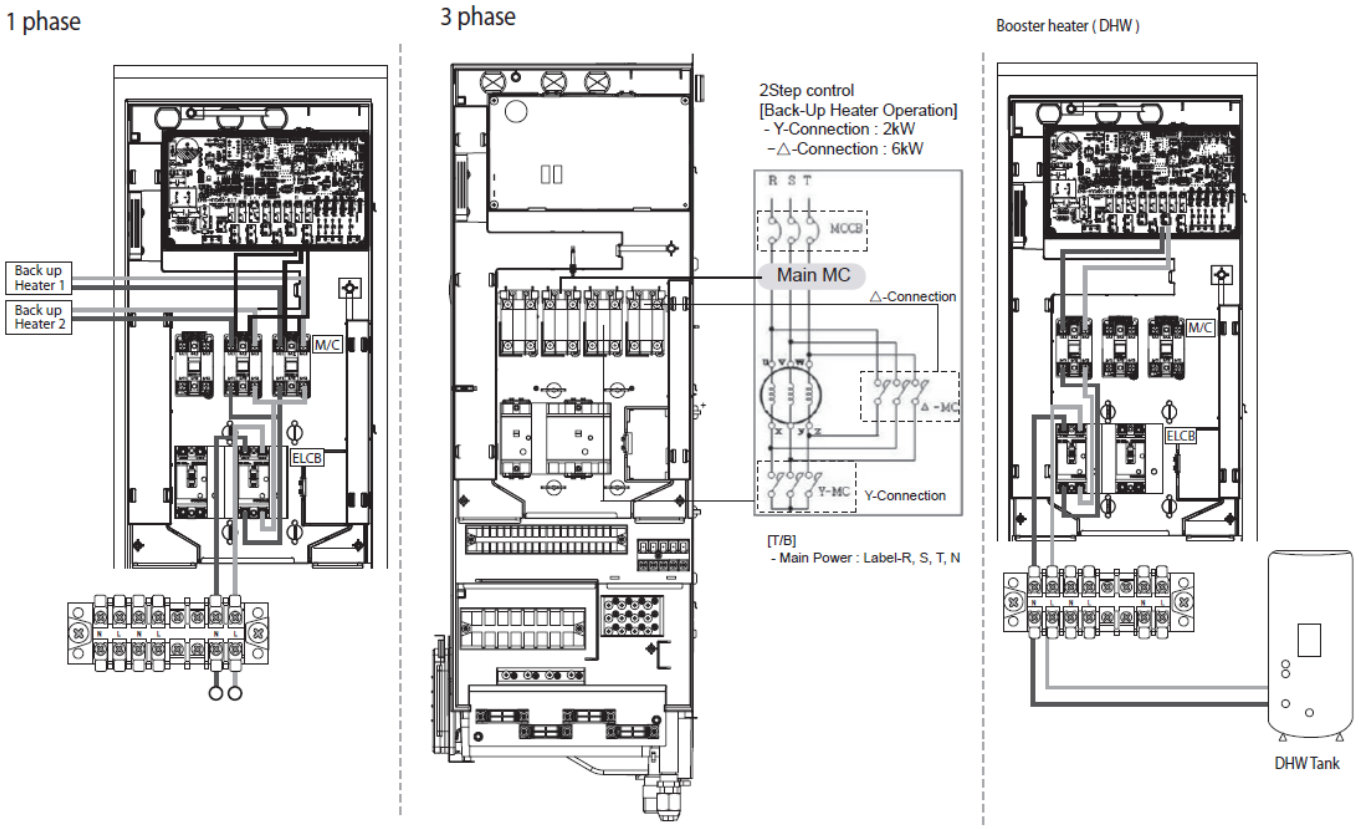

5. Electric Specifications

5-1. Hydro Unit

3) Thermostat

Description	No. of wires	Max. A	Thickness	Supply Scope
Room Thermostat for weather control	4	22mA	> 0.75mm^2	Field supply (230V~, Input)

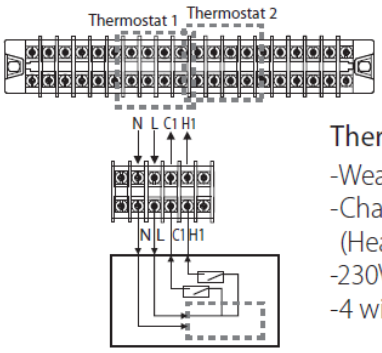

Thermostat
-Weather controller
-Changeover
(Heating and Cooling)
-230V AC
-4 wires

Process

1. Before the installation, hydro unit should be turned off.
2. Using the appropriate equipment to correct position of terminal block as shown on the diagram.
3. Make sure what type is you use.
   - Contact signal must be " L ".
   When you install two thermostats, thermostat2 is prior to thermostat1.

4) 2way Valve

Description	No. of wires	Max. A	Thickness	Supply Scope
Motorized 2-way valve to shut off UFH loops during cooling.	2+ground	22mA	> 0.75mm^2	Field supply (230V~, Output)

2-way motorized valve
-When outlet water temperature reach to lower than 16°C in cooling mode, UFH loops will be closed.
-230V AC
-2 wires(Normal Open or Normal Close)

Process

1. Before the installation, hydro unit should be turned off.
2. Using the appropriate equipment to correct position of terminal block as shown on the diagram.
3. Make sure what type is you use.
   – Normal OPEN or Normal CLOSED.

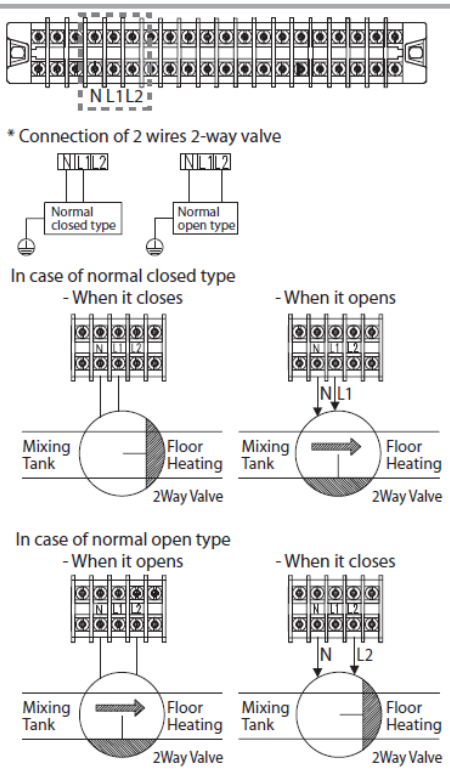

5. Electric Specifications

5-1. Hydro Unit

4) 3way Valve

Description	No. of wires	Max. A	Thickness	Supply Scope
Diverting type 3way valve	4	22mA	0.75mm² H05RN-F or H07RN-F	Field supply (230V~, Output)

3-way diverting valve for water tank
-Diverting type
-230V AC

Process

1. Before the installation, hydro unit should be turned off.
2. Using the appropriate equipment to correct position of terminal block as shown on the diagram.
3. Make sure what type of 3 way V/V you use .

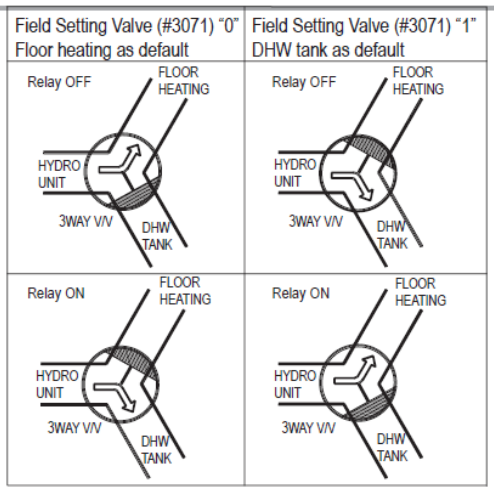

5) Back-up Boiler

Description	No. of wires	Max. A	Thickness	Supply Scope
Back-up Boiler	2+ground	1 A	0.75mm² H05RN-F or H07RN-F	Field supply (230V~, Output)

Process

1. Before the installation, hydro unit should be turned off.
2. Using the appropriate equipment to correct position of terminal block as shown on the diagram.
3. Make sure EXT-CTRL signal of back up boiler must be 230Vac.
   ◆ Do not connect supply power of back up boiler directly.

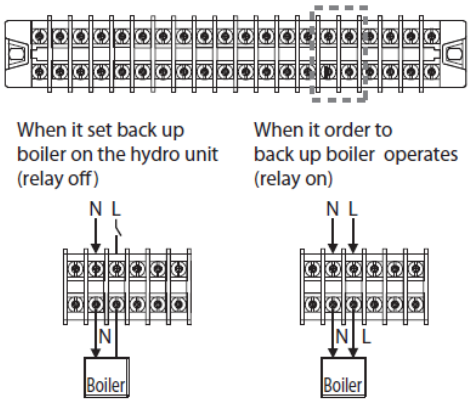

6) DHW Tank

Description	No. of wires	Max. A	Thickness	Supply Scope
Solar pump	2+ground	1 A	0.75mm² H05RN-F or H07RN-F	Field supply (230V~, Input)

Process

1. Before the installation, hydro unit should be turned off.
2. Using the appropriate equipment to correct position of terminal block as shown on the diagram.
3. It is for hydro unit to inform that the pump is operating.
4. Solar pump is controlled by installer's handling. And it send the signal to hydro unit depending on solar pump conditions.
   In operating mode, signal shall be around 230Vac B/W N&L.
   In non-operating mode, signal shall be around 0Vac B/W N&L.

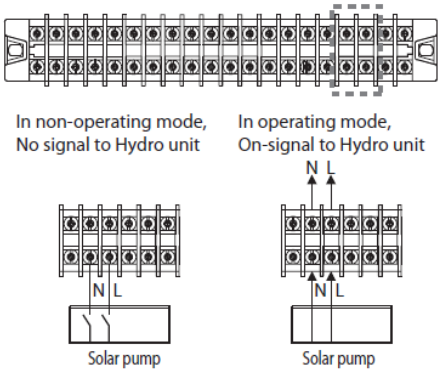

6. Hydraulic Performance

6-1. Water Pump & Expansion Vessel Performance

The unit is equipped with an expansion vessel of 8 litres which has a default pre-pressure of 1 bar.
To ensure correct operation of the unit, the pre-pressure of the expansion vessel might need to be adjusted and the minimum and maximum water volume must be checked.

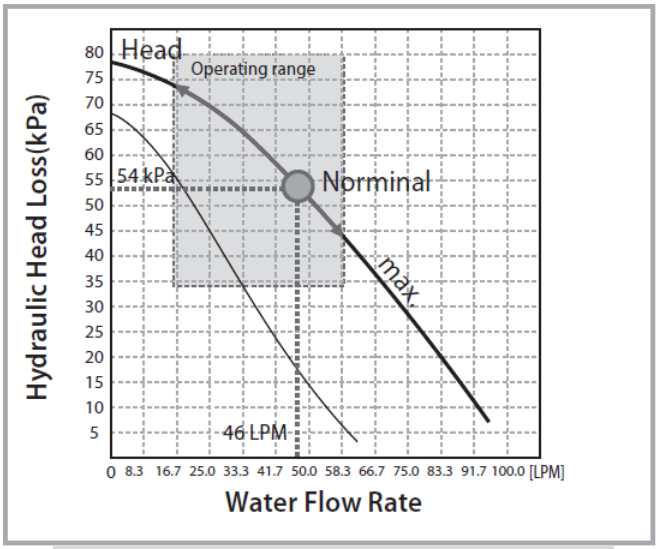

Water Pump Performance (AEN160YD*HA)

- To secure enough water flow rate, set water pump speed as "Max.".
- The standard pressure drop of the unit is 30~35 kPa.
- When it's needed to get additional E.S.P(external pressure drop) according to field piping works, connect additional pumps(RS25/8) on the field piping line in series.

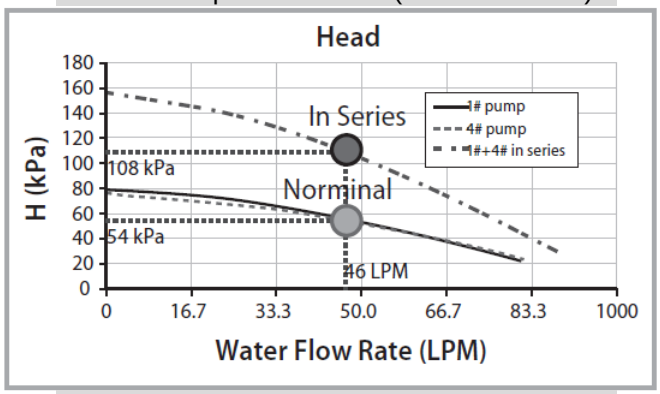

Water Pump Performance (AEN160YD*HA)

- If the pressure loss of total system is over 54kPa, additional water pump should be installed in series.
  Otherwise, the water flow rate might be decreased, causing insufficient heating or cooling.

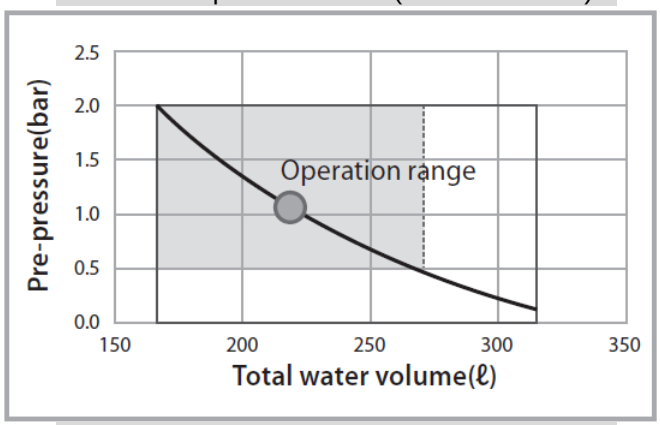

Expansion Vessel Performance

- Pre-pressure is adjusted by the total water volume.

III. Application

1. Application Examples

1-1. Space Heating

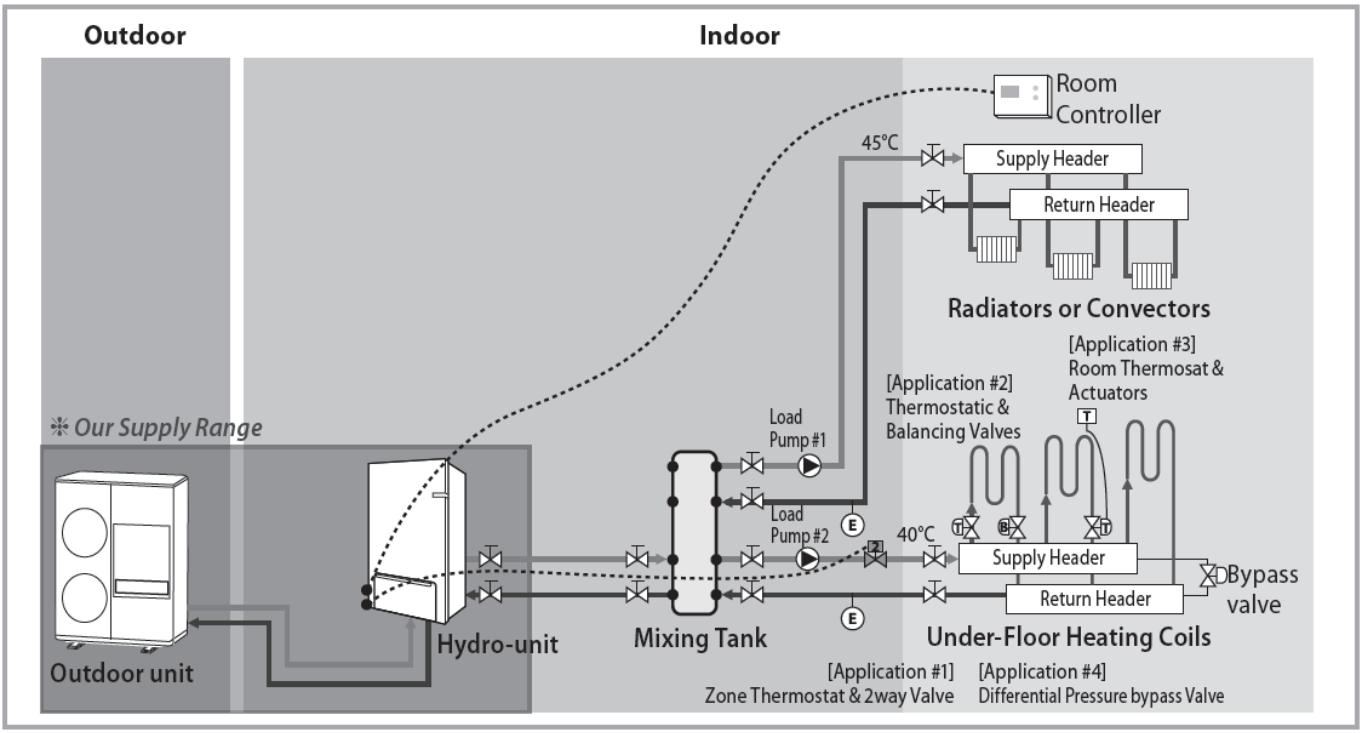

1-2. Space Heating + Water Heating

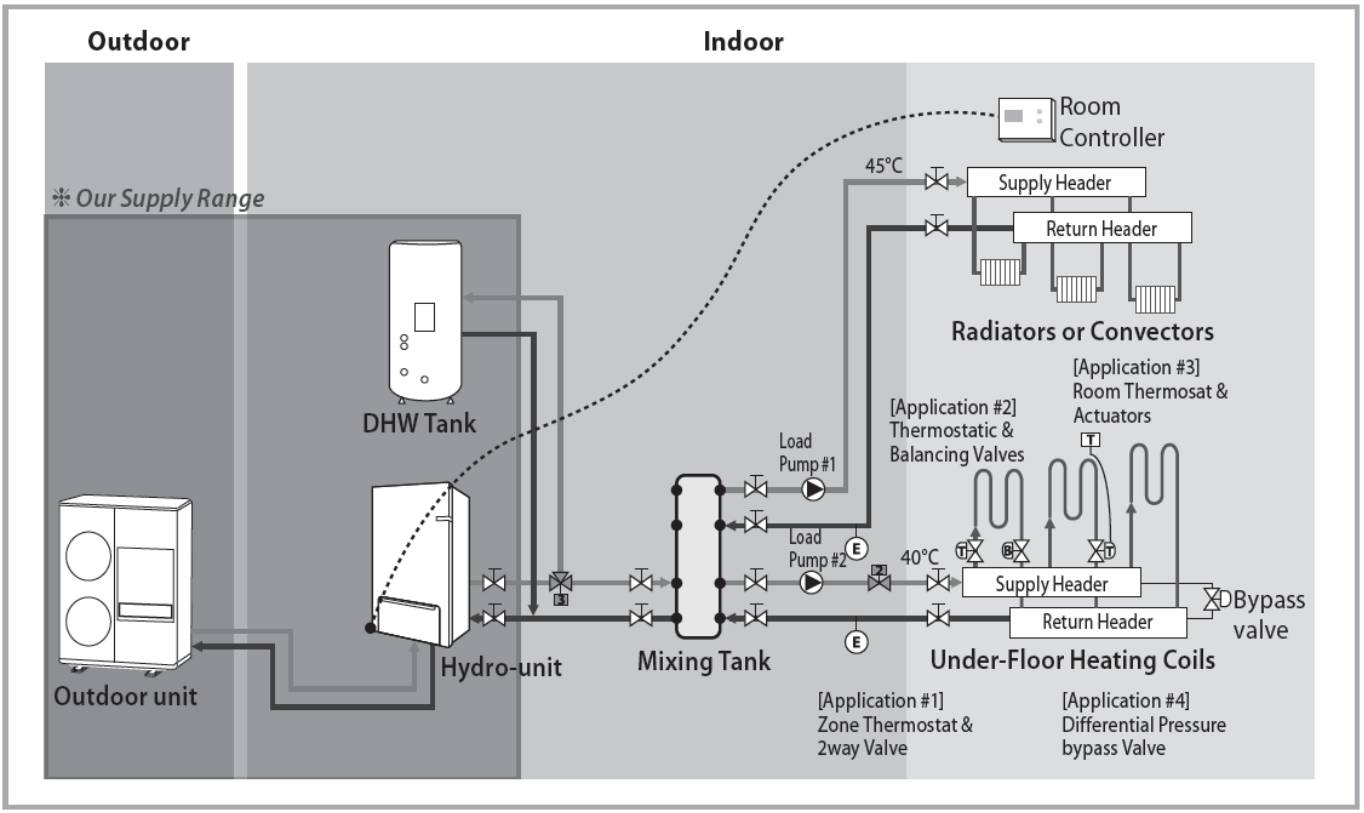

1. Application Examples

1-3. Hybrid Application (Back-up Boiler & Solar Panel connected)

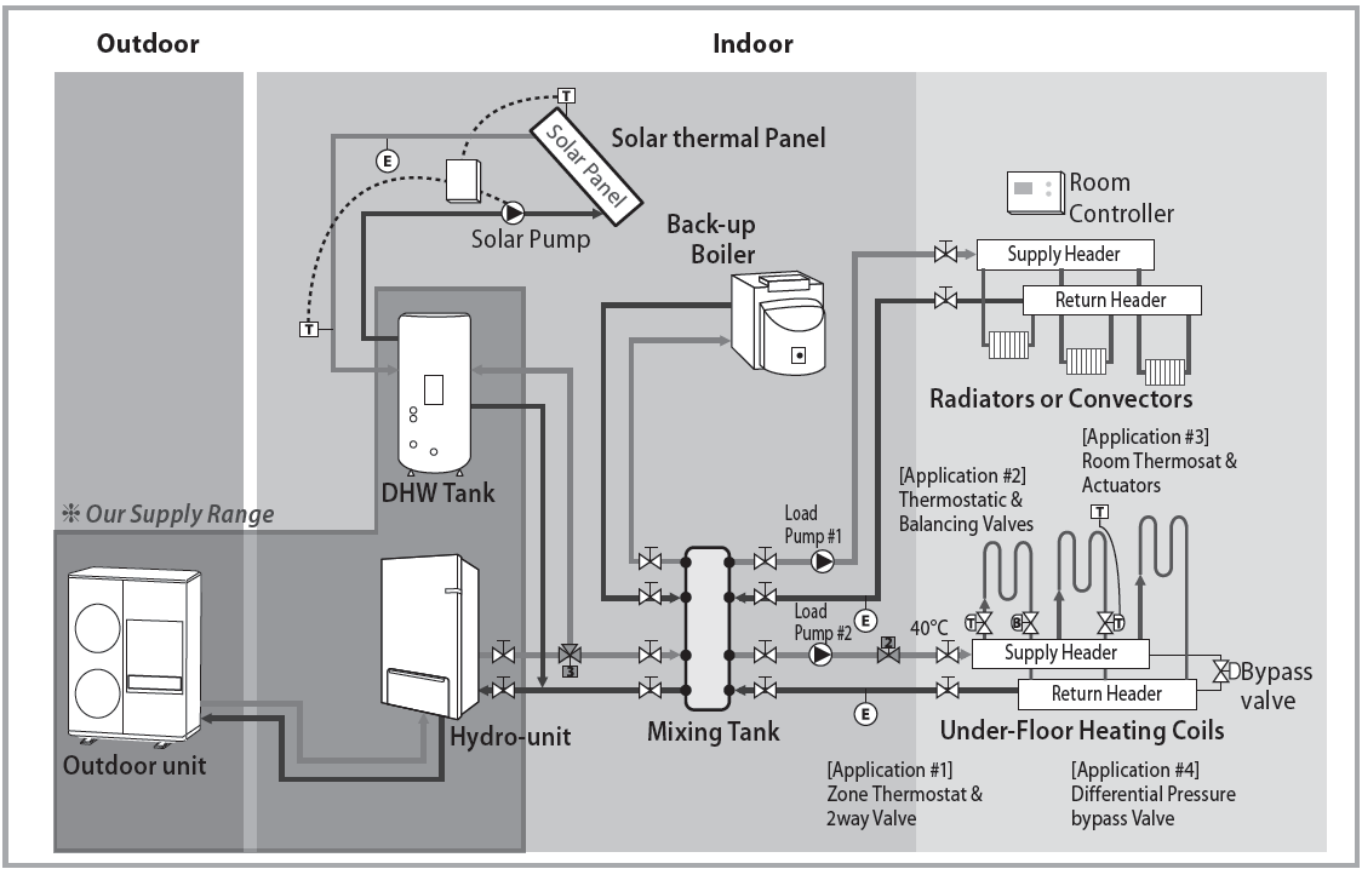

SAMSUNG

2012.12
DBEU-12082P(3)

SAMSUNG

SAMSUNG ELECTRONICS Co., Ltd.
Digital Appliances Business, Air Conditioning Marketing Group, SE.

Head Office (Suwon Korea) : 416, Maetan 3-dong, Yeongtong-gu, Suwon-Si, Gyeonggi-do, Korea 443-742
Website : www.dvmsystem.com Email : airconditioner@samsung.com