FJM

Technical Data Book

ODU and IDU for Europe (R410A, 50Hz, HP)

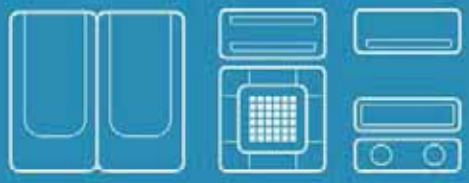

Model : AJ***FCJ*EH/EU
AR**JSPFBWKNEU
AR**KSPDBWKNEU
AR**KSWSAWKNEU
AR**KSWSBWKNET
AR**KSWNAWKNEU
AR**KSWNAWKNET
AR**KSFPEWQNEU
AR**KSFPEWQNET
AR**FSFPDGMNEU
AR**KSFHBWKNEU
AR**KSFHBWKNET
MH***FSEA
AJN***NDEHA/EU
NJ***LHXEA
MH***FUEA
MH***FJEA

SAMSUNG

History

Version	Modification	Date	Remark
Ver.1.0	Release FJM ODU and IDU TDB for Europe	14. 02.	
Ver.1.1	Added new Maldives model(7/9/12k) in 1 unified FJM TDB	15. 04. 10.	
Ver.1.2	Modification for errors : Size for Maldives(5/6.8kW) in Specification	15. 08. 10.	
Ver.1.3	Update the drawing for ODU(5.2/6.8/7/8kW)	16. 01. 16.	
Ver.1.4	Update 2016yr line-up	16. 02. 19.	
Ver.1.5	Modification for “1. Specification” (add AR5580/5680 line-up and update sound data). Modification for “6. Sound Pressure Level” and “7. Sound Power Level”.	16. 05. 31.	

Contents



I. Products

1. Nomenclature
2. Line-up
3. Combination
4. Accessories

II. Performance

1. Specifications
2. Combination table
3. Dimentional drawing
4. Electrical wiring diagram
5. Cycle diagram
6. Sound pressure level
7. Sound power level
8. Operation limit
9. Recommended operation range (PQ curve)
10. Electric characteristics

III. Capacity Table

Free Joint Multi

I. Products

1. Nomenclature
2. Line-up
3. Combination
4. Accessories

1 Nomenclature

1-1. Outdoor units

Model name

AJ	068	F	C	J	3	E	H	/	E	U
(1)	(2)	(3)	(4)	(5)	(6)	(7)	(8)		Buyer	

(1) Model	
AJ	Free Joint Multi

(2) Capacity
X 1/10 kW (3 digits)

(3) Year	
E	2012
F	2013

(4) Product type	
S	Set (NASA)
N	Indoor Unit (NASA)
X	Outdoor Unit (NASA)
A	Set (Non NASA)
B	Indoor Unit (Non NASA)
C	Outdoor Unit (Non NASA)

(5) Product Notation	
J	Free Joint Multi
P	Pack Multi
H	DVM Home

(6) Max. Room No.	
2	2 Rooms
3	3 Rooms
4	4 Rooms
5	5 Rooms

(7) Rating voltage	
A	115V, 60Hz, 1Ø
B	220V, 60Hz, 1Ø
C	208~230V, 60Hz
D	200~220V, 50Hz
E	220~240V, 50Hz
F	208~230V, 60Hz, 3Ø
G	380~415V, 50Hz, 3Ø
H	380V, 60Hz, 3Ø
J	460V, 60Hz, 3Ø
K	220~240V, 50/60Hz, 1Ø
M	127V, 50Hz
N	380~415V, 50/60Hz, 3Ø

(6) Mode / Refrigerant		
C	Cooling Only	R410A
H	Heat Pump	
R	Heat Recovery	
D	Cooling Only	R22
E	Heat Pump	

1-2. Indoor units

Model name

AR	12	K	S	P	DB	WK	N	E	U
(1)	(2)	(3)	(4)	(5)	(6)	(7)	(8)	Buyer	

(1) Model	
AR	RAC

(2) Capacity
X 1000 BTU/H (2 digits)

(3) Year	
F	2013
H	2014
J	2015
K	2016

(4) Feature 1	
S	Inverter HP R410A

(5) Feature 2	
F	Virus Doctor not included
P	Wi-Fi + Virus Doctor
W	Wi-Fi

(6) Series	
DB	FMC DLX (A3050 Better) 2nd
FB	FMC FLG (A3050 Best) 2nd
HB	New Boracay (No Pattern)
NA	FMC ENT (A3050 Good2) 1st
PD	Maldives (A)
PE	Maldives (A+High)
SA	FMC STD (A3050 Good1) 1st
SB	FMC STD (A3050 Good1) 2nd

(7) Color	
GM	PM Gray
WK	DA White
WQ	DA White

(8) Product	
N	Indoor unit

1 Nomenclature

1-2. Indoor units

Model name

AJ	N	052	N	D	E	H	A	/	C	D
(1)	(2)	(3)	(4)	(5)	(6)	(7)	(8)		Buyer	

(1) Mode	
AC	CAC
AD	DVM
AJ	FJM
AE	EHS

(2) Product Type	
S	Set
N	Indoor Unit
X	Outdoor Unit

(3) Capacity
X 1/10kW (3 digits)

(4) Product Notation	
Cassette type	Slim 1way
	2way
	4Way Cassette (600x600)
	4way
Duct type	HSP Duct
	MSP Duct
	LSP Duct(Slim)
Convertible type	Ceiling
	Console
Wall mounted type	Jungfrau
	Neo Forte - E
	Neo Forte
	Maldives
	Vivace

(5) Feature	
D	Deluxe
S	Standard

(6) Rating Voltage	
B	220V, 60Hz, 1Ø
C	208~230V, 60Hz
E	220~240V, 50Hz

(7) Product Notation②		
C	Cooling Only	R410A
H	Heat Pump	
R	Heat Recovery	
D	Cooling Only	R22
E	Heat Pump	

(8) Version	
A~Z	Export

Model name

M	H	035	F	J	E	A	1
(1)	(2)	(3)	(4)	(5)	(6)	(7)	(8)

(1) Model	
M	Multi

(2) Mode	
C	Cooling Only
H	Heat Pump

(3) Capacity
X 1/10 kW (3 digits)

(4) Compressor	
F	Free Inverter
D	Free Digital Scroll

(5) Product Notation	
S	Slim 1way Cassette
M	4Way Cassette (600x600)
U	MSP Duct
N	Neo Forte
J	Console
V	Vivace
A	Crystal

(6) Rating Voltage	
A	115V, 60Hz
B	220V, 60Hz
C	208~230V, 60Hz
D	200~220V, 50Hz
E	220~240V, 50Hz

(7) Refrigerant	
Z	R22
A	R410A

(8) Version

Model name

NJ	026	L	H	X	E	A
(1)	(2	(3)	(4)	(5)	(6)	(7)

(1) Model	
NJ	Free Joint

(2) Capacity
X 1/10 kW (3 digits)

(3) Product Notation	
L	Slim Duct

(4) Mode	
C	Cooling Only
H	Heat Pump

(5) Refrigerant	
R	R22
X	R410A

(6) Rating Voltage	
E	220~240V, 50Hz

(7) Version	
A ~ Z	Export

2 Line - Up

2-1. Outdoor units

Capacity	4 / 5kW	5.2kW	6 / 7 / 8kW	10kW
Image				
Models	AJ040FCJ2EH/EU AJ050FCJ2EH/EU	AJ052FCJ3EH/EU	AJ068FCJ3EH/EU AJ070FCJ4EH/EU AJ080FCJ4EH/EU	AJ100FCJ5EH/EU

2-2. Indoor units

Capacity / Type	1.6kW	2.0kW	2.6kW (2.5kW)	3.5kW	5.2kW (5.0kW)	7.0kW (6.8kW)
Maldives						
4Way Cassette (600x600)						
Slim 1Way Cassette						
Slim Duct						
MSP Duct						
Console						
AR9570						
AR7580						
AR5580 AR5680						
New Boracay						

3 Combination

Indoor Unit \ Outdoor Unit			 AJ040FCJ2EH/EU	 AJ050FCJ2EH/EU	 AJ052FCJ3EH/EU	 AJ068FCJ3EH/EU	 AJ070FCJ4EH/EU	 AJ080FCJ4EH/EU	 AJ100FCJ5EH/EU
Chassis	Model	Capacity (kW)	4.0	5.0	5.2	6.0	7.0	8.0	10.0
Maldives	AR**KSFPEWQNEU AR**KSFPEWQNET AR**FSFPDGMNEU	2.0	•	•	•	•	•	•	•
		2.5	•	•	•	•	•	•	•
		3.5	•	•	•	•	•	•	•
		5.0	x	•	•	•	•	•	•
		6.8	x	x	x	x	x	•	•
 Console	MH***FJEA	2.6	•	•	•	•	•	•	•
		3.5	•	•	•	•	•	•	•
		5.2	x	•	•	•	•	•	•
 1Way Cassette	MH***FSEA	2.6	•	•	•	•	•	•	•
		3.5	•	•	•	•	•	•	•
 4Way Cassette (600x600)	AJN***NDEHA	1.6	x	•	•	•	•	•	•
		2.0	x	•	•	•	•	•	•
		2.6	x	•	•	•	•	•	•
		3.5	x	•	•	•	•	•	•
		5.2	x	x	x	•	•	•	•
 Slim Duct	MH***FEEA	2.6	x	•	•	•	•	•	•
		3.5	x	•	•	•	•	•	•
 MSP Duct	MH***FUEA	5.2	x	x	x	•	•	•	•
 AR9570	AR**JSPFBWKNEU	2.5	•	•	•	•	•	•	•
		3.5	•	•	•	•	•	•	•
 AR7580	AR**KSPDBWKNEU	2.0	•	•	•	•	•	•	•
		2.5	•	•	•	•	•	•	•
		3.5	•	•	•	•	•	•	•
		5.0	x	•	•	•	•	•	•
		6.8	x	x	x	x	x	•	•
 AR5580 AR5680	AR**KSWSAWKNEU AR**KSWSBWKNET AR**KSWNAWKNEU AR**KSWNAWKNET	2.0	•	•	•	•	•	•	•
		2.5	•	•	•	•	•	•	•
		3.5	•	•	•	•	•	•	•
		5.0	x	•	•	•	•	•	•
		6.8	x	x	x	x	x	•	•
New Boracay	AR**KSFHBWKNEU AR**KSFHBWKNET	2.0	•	•	•	•	•	•	•
		2.5	•	•	•	•	•	•	•
		3.5	•	•	•	•	•	•	•
		5.0	x	•	•	•	•	•	•
		6.8	x	x	x	x	x	•	•

4 Accessories

Classification	Model	Image	Application model
Drain Pump	MDP-E075SEE3		Slim Duct (2.6 ~3.5kW)
	MDP-M075SGU3		MSP Duct (5.2kW)
Panel	PC4SUSMA		4Way Cassette (600x600)
	PSSMA		Slim 1way Cassette
RAC Extension Board	MIM-A00	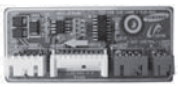	Maldives / AR**** / New Boracay

II. Performance

1. Specifications
2. Combination table
3. Dimentional drawing
4. Electrical wiring diagram
5. Cycle diagram
6. Sound pressure level
7. Sound power level
8. Operation limit
9. Recommended operation range (PQ curve)
10. Electric characteristics

1 Specifications

1-1. Outdoor units



Model Name				AJ040FCJ2EH/EU	AJ050FCJ2EH/EU	AJ052FCJ3EH/EU	AJ068FCJ3EH/EU
Power Supply			Ø, #, V, Hz	1,2,220~240,50	1,2,220~240,50	1,2,220~240,50	1,2,220~240,50
Mode			-	HEAT PUMP	HEAT PUMP	HEAT PUMP	HEAT PUMP
Performance	HP		HP	1.50	1.80	2.00	2.50
	Capacity (Nominal)	Cooling [1]	kW	4.00	5.00	5.20	6.80
			Btu/h	13,600	17,100	17,700	23,200
		Heating [2]	kW	4.40	5.70	6.30	8.00
			Btu/h	15,000	19,400	21,500	27,300
Power	Power Input (Nominal)	Cooling [1]	kW	1.02	1.32	1.35	2.00
		Heating [2]	kW	0.99	1.35	1.40	1.91
	Current Input (Nominal)	Cooling [1]	A	4.70	6.00	6.20	9.20
		Heating [2]	A	4.50	6.20	6.40	8.70
	MCA		A	9.8	11.8	12.2	15.5
	MFA		A	11.25	13.75	13.75	17.50
Energy Efficiency	Nominal Cooling(EER) [1]		-	3.92	3.79	3.85	3.40
	Nominal Heating(COP) [1]		-	4.44	4.22	4.50	4.19
Compressor	Type		-	Twin BLDC Rotary x 1	Twin BLDC Rotary x 1	Twin BLDC Rotary x 1	Twin BLDC Rotary x 1
	Output		kW	(4.45)	(4.45)	(1.79)	(1.79)
	Model Name		-	UG4T150FUDJQSS x 1	UG4T150FUDJQSS x 1	UG4T200FUAE4SS x 1	UG4T200FUAE4SS x 1
	Oil	Type	-	POE	POE	POE	POE
		Initial Charge	cc	650	650	650	650
Fan	Type		-	Propeller Fan/BLDC	Propeller Fan/BLDC	Propeller Fan/BLDC	Propeller Fan/BLDC
	Output x n		W	35 x 1	35 x 1	45 x 1	124 x 1
	Air Flow Rate		CMM	30	33	38	48
			VS	506.67	551.67	633.33	791.67
Piping Connections	Liquid Pipe		Ø, mm	6.35 x 2	6.35 x 2	6.35 x 3	6.35 x 3
			Ø, inch	1/4" x 2	1/4" x 2	1/4" x 3	1/4" x 3
	Gas Pipe		Ø, mm	9.52 x 2	9.52 + 12.70	9.52 x 2 + 12.70	9.52 + 12.70 x 2
			Ø, inch	3/8" x 2	3/8" + 1/2"	3/8" x 2 + 1/2"	3/8" + 1/2" x 2
	Installation Limitation	Max. Length	m	20(25)	20(25)	20(25)	20(25)
		Max. Height	m	15(15)	15(15)	15(15)	15(15)
Refrigerant	Type		-	R410A	R410A	R410A	R410A
	Factory Charging		kg	1.30	1.60	2.20	2.20
Sound [3]	Sound Pressure		dB(A)	45.0	46.0	46.0	48.0
	Sound Power		dB(A)	61.0	61.0	61.0	63.0
External Dimension	Net Weight		kg	37.0	40.0	49.0	57.0
	Shipping Weight		kg	40.0	43.0	53.0	61.0
	Net Dimensions (WxHxD)		mm	790 x 545 x 285	790 x 545 x 285	880 x 638 x 310	880 x 798 x 310
	Shipping Dimensions (WxHxD)		mm	926 x 599 x 382	926 x 599 x 382	1,053 x 695 x 413	1,023 x 889 x 413
Operating Temp. Range	Cooling		°C	-5.0 ~ 46.0	-5.0 ~ 46.0	-5.0 ~ 46.0	-5.0 ~ 46.0
	Heating		°C	-15.0 ~ 24.0	-15.0 ~ 24.0	-15.0 ~ 24.0	-15.0 ~ 24.0

* All figures comply with EN14511

1) Nominal cooling capacities are based on;
Indoor temperature : 27°C DB, 19°C WB / Outdoor temperature : 35°C DB, Equivalent refrigerant piping : 5m(4/5kW), 7.5m(5.2/6kW), Level differences : 0m

2) Nominal heating capacities are based on;
Indoor temperature : 20°C DB, 15°C WB / Outdoor temperature : 7°C DB, 6°C WB, Equivalent refrigerant piping : 5m(4/5kW), 7.5m(5.2/6kW), Level differences : 0m

3) Sound level was acquired in an anechoic room. Thus actual noise level may be different depending on the installation conditions.

4) These products contain R410A which is fluorinated greenhouse gas.





Model Name				AJ070FCJ4EH/EU	AJ080FCJ4EH/EU	AJ100FCJ5EH/EU
Power Supply			Ø, #, V, Hz	1,2,220-240,50	1,2,220-240,50	1,2,220-240,50
Mode			-	HEAT PUMP	HEAT PUMP	HEAT PUMP
Performance	HP		HP	2.50	3.00	3.50
	Capacity (Nominal)	Cooling [1]	kW	7.00	8.00	10.00
			Btu/h	23,900	27,300	34,100
		Heating [2]	kW	8.60	9.30	12.00
			Btu/h	29,300	31,700	40,900
Power	Power Input (Nominal)	Cooling [1]	kW	1.90	2.30	2.90
		Heating [2]	kW	2.00	2.20	2.93
	Current Input (Nominal)	Cooling [1]	A	8.70	10.50	13.30
		Heating [2]	A	9.20	10.10	13.40
	MCA		A	18.7	18.7	26.2
	MFA		A	20.75	20.75	28.8
Energy Efficiency	Nominal Cooling(EER) [1]		-	3.68	3.48	3.45
	Nominal Heating(COP) [1]		-	4.30	4.23	4.10
Compressor	Type		-	Twin BLDC Rotary x 1	Twin BLDC Rotary x 1	Twin BLDC Rotary x 1
	Output		kW	(7.77)	(7.77)	(11.37)
	Model Name		-	G8T260FUAEW-SS x 1	G8T260FUAEW-SS x 1	UG8T300FUBJUSG x 1
	Oil	Type	-	POE	POE	POE
		Initial Charge	cc	700	700	1200
Fan	Type		-	Propeller Fan/BLDC	Propeller Fan/BLDC	Propeller Fan/BLDC
	Output x n		W	124 x 1	124 x 1	150 x 1
	Air Flow Rate		CMM	46	47	71
			VS	770.00	781.67	1,176.67
Piping Connections	Liquid Pipe		Ø, mm	6.35 x 4	6.35 x 4	6.35 x 5
			Ø, inch	1/4" x 4	1/4" x 4	1/4" x 5
	Gas Pipe		Ø, mm	9.52 x 2 + 12.70 x 2	9.52 x 2 + 12.70 x 2	9.52 x 2 + 12.70 x 3
			Ø, inch	3/8" x 2 + 1/2" x 2	3/8" x 2 + 1/2" x 2	3/8" x 2 + 1/2" x 3
	Installation Limitation	Max. Length	m	25(30)	25(30)	25(30)
		Max. Height	m	15(15)	15(15)	15(15)
Refrigerant	Type		-	R410A	R410A	R410A
	Factory Charging		kg	2.80	2.80	3.30
Sound [3]	Sound Pressure		dB(A)	48.0	49.0	54.0
	Sound Power		dB(A)	63.0	63.0	70.0
External Dimension	Net Weight		kg	65.0	65.0	74.5
	Shipping Weight		kg	70.0	70.0	80.0
	Net Dimensions (WxHxD)		mm	880 x 798 x 310	880 x 798 x 310	940 x 998 x 330
	Shipping Dimensions (WxHxD)		mm	1,023 x 889 x 413	1,023 x 889 x 413	995 x 1,096 x 426
Operating Temp. Range	Cooling		°C	-5.0 ~ 46.0	-5.0 ~ 46.0	-10.0 ~ 46.0
	Heating		°C	-15.0 ~ 24.0	-15.0 ~ 24.0	-15.0 ~ 24.0

* All figures comply with EN14511

1) Nominal cooling capacities are based on;
Indoor temperature : 27°C DB, 19°C WB / Outdoor temperature : 35°C DB, Equivalent refrigerant piping : 5m(4/5kW), 7.5m(5.2/6kW), Level differences : 0m

2) Nominal heating capacities are based on;
Indoor temperature : 20°C DB, 15°C WB / Outdoor temperature : 7°C DB, 6°C WB, Equivalent refrigerant piping : 5m(4/5kW), 7.5m(5.2/6kW), Level differences : 0m

3) Sound level was acquired in an anechoic room. Thus actual noise level may be different depending on the installation conditions.

4) These products contain R410A which is fluorinated greenhouse gas.

1 Specifications

1-2. Indoor units

1) Maldives



Type				Maldives	Maldives	Maldives
Model Name				AR07KSFPEWQNEU	AR09KSFPEWQNET	AR12KSFPEWQNET
Power Supply			Ø, #, V, Hz	1,2,220-240,50	1,2,220-240,50	1,2,220-240,50
Mode			-	HP/HR	HP/HR	HP/HR
Performance	Capacity (Nominal)	Cooling	kW	2.00	2.50	3.50
			Btu/h	6,800	8,500	11,900
		Heating	kW	2.20	3.20	4.00
			Btu/h	7,500	10,900	13,600
Power	Power Input (Nominal)	Cooling	W	30.00	30.00	30.00
		Heating	W	30.00	30.00	30.00
	Current Input (Nominal)	Cooling	A	0.30	0.30	0.30
		Heating	A	0.30	0.30	0.30
Fan	Motor	Type	-	Crossflow Fan	Crossflow Fan	Crossflow Fan
		Output x n	W	27 x 1	27 x 1	27 x 1
	Air Flow Rate	High / Mid / Low	CMM	8.00	9.00	10.00
			l/s	133.33	150.00	166.67
	External Pressure	Min / Std / Max	mmAq	-	-	-
			Pa	-	-	-
Piping Connections	Liquid Pipe		Ø, mm	6.35	6.35	6.35
			Ø, inch	1/4"	1/4"	1/4"
	Gas Pipe		Ø, mm	9.52	9.52	9.52
			Ø, inch	3/8"	3/8"	3/8"
	Drain Pipe		Ø, mm	ID18 HOSE	ID18 HOSE	ID18 HOSE
Refrigerant	Type		-	R410A	R410A	R410A
	Control Method		-	EEV NOT INCLUDED	EEV NOT INCLUDED	EEV NOT INCLUDED
Sound	Pressure	High/Mid/Low	dBA	37.0 / 28.0 / 23.0	37.0 / 28.0 / 23.0	42.0 / 33.0 / 23.0
	Power	Cooling		56.0	56.0	59.0
Dimension	New Weight		kg	8.20	8.20	8.20
	Shipping Weight		kg	9.80	9.80	9.80
	Net Dimensions (WxHxD)		mm	820 x 285 x 215	820 x 285 x 215	820 x 285 x 215
	Shipping Dimensions (WxHxD)		mm	880 x 360 x 260	880 x 360 x 260	880 x 360 x 260
Panel Size	Panel Model		-	-	-	-
	Panel New Weight		kg	-	-	-
	Shipping Weight		kg	-	-	-
	Net Dimensions (WxHxD)		mm	-	-	-
	Shipping Dimensions (WxHxD)		mm	-	-	-
Additional Accessories	Drain Pump	Drain Pump	- / Model	-	-	-
		Max. lifting Height / Displacement	mm / liter / h	-	-	-
	Air Filter		-	-	-	-

* Specifications may be subject to change without prior notice.
1) Nominal cooling capacities are based on;
  - Indoor temperature : 27°C DB, 19°C WB
  - Outdoor temperature : 35°C DB, 24°C WB, Equivalent refrigerant piping : 5m, Level differences : 0m
2) Nominal heating capacities are based on;
  - Indoor temperature : 20°C DB, 15°C WB
  - Outdoor temperature : 7°C DB, 6°C WB, Equivalent refrigerant piping : 5m, Level differences : 0m
3) Sound pressure was acquired in an anechoic room. Thus actual noise level may be different depending on the installation conditions.
4) Please refer to "3. Dimensional drawings" for installation sizing.
5) These products contain R410A which is fluorinated greenhouse gas.




Model Name				AR18FSFPDGMNEU	AR24FSFPDGMNEU
Power Supply			Ø, #, V, Hz	1, 2, 220~240, 50	1, 2, 220~240, 50
Mode			–	HP	HP
Performance	Capacity (Nominal)	Cooling [1]	kW	5.0	6.8
			Btu/h	17,100	23,200
		Heating [2]	kW	6.0	7.8
			Btu/h	20,500	26,600
Power	Power Input (Nominal)	Cooling [1]	W	40	60
		Heating [2]	W	40	60
	Current Input (Nominal)	Cooling [1]	A	0.30	0.45
		Heating [2]	A	0.30	0.45
Fan	Motor	Type	–	Crossflow Fan / BLDC	Crossflow Fan / BLDC
		Output	W	27	27
		Number of Unit	EA	1	1
	Air Flow Rate	High / Mid / Low	CMM	14.2 / 12.3 / 11.2	17.8 / 14.3 / 10.6
	External Pressure	Min / Std / Max	mmAq	–	–
			Pa	–	–
Option Code			–	012405-15423E-27323C -37F601-034B49-114049	012405-18428C-27444E -37F301-03464D-114647
Piping Connections	Liquid Pipe		Ø,mm	6.35	6.35
			Ø, inch	1/4	1/4
	Gas Pipe		Ø,mm	12.7	15.88
			Ø, inch	1/2	5/8
	Drain Pipe		Ø,mm	ID 18 Hose	ID 18 Hose
Refrigerant	Type		–	R410A	R410A
	Control Method		–	EEV NOT INCLUDED	EEV NOT INCLUDED
Sound	Sound Pressure	High / Mid / Low	dBA	40 / 34 / 27	44 / 35 / 29
	Sound Power	Cooling	dBA	57	62
Dimensions	Net Weight		kg	13	13
	Shipping Weight		kg	16	16
	Net Dimensions (W×H×D)		mm	1,065 x 230 x 298	1,065 x 230 x 298
	Shipping Dimensions (W×H×D)		mm	1,137 x 377 x 299	1,137 x 377 x 299
Panel Size	Panel Model		–	–	–
	Panel Net Weight		kg	–	–
	Shipping Weight		kg	–	–
	Net Dimensions (W×H×D)		mm	–	–
	Shipping Dimensions (W×H×D)		mm	–	–
Additional Accessories	Drain Pump	Drain Pump	– /Model	–	–
		Max. lifting Height / Displacement	mm / liter/h	–	–
	Air Filter		–	Full HD Filter 90	Full HD Filter 90

* All figures comply with EN14511

1) Nominal cooling capacities are based on;
Indoor temperature : 27°C DB, 19°C WB / Outdoor temperature : 35°C DB, Equivalent refrigerant piping : 5m , Level differences : 0m

2) Nominal heating capacities are based on;
Indoor temperature : 20°C DB, 15°C WB / Outdoor temperature : 7°C DB, 6°C WB, Equivalent refrigerant piping : 5m, Level differences : 0m

3) Sound level was acquired in an anechoic room. Thus actual noise level may be different depending on the installation conditions.

4) These products contain R410A which is fluorinated greenhouse gas.

1 Specifications

1-2. Indoor units

2) Slim 1way Cassette





Model Name				MH026FSEA	MH035FSEA
Power Supply			Ø, #, V, Hz	1, 2, 220~240, 50	1, 2, 220~240, 50
Mode			-	HP	HP
Performance	Capacity (Nominal)	Cooling [1]	kW	2.6	3.5
			Btu/h	8,900	11,900
		Heating [2]	kW	2.9	3.8
			Btu/h	9,900	13,000
Power	Power Input (Nominal)	Cooling [1]	W	45	50
		Heating [2]	W	45	50
	Current Input (Nominal)	Cooling [1]	A	0.23	0.25
		Heating [2]	A	0.23	0.25
Fan	Motor	Type	-	Crossflow Fan / SSR	Crossflow Fan / SSR
		Output	W	-	-
		Number of unit	EA	1	1
	Air Flow Rate	High / Mid / Low	CMM	6.2 / -/ -	7.6 / -/ -
	External Pressure	Min / Std / Max	mmAq	-	-
			Pa	-	-
Option Code			-	078605-1420F8 -200000-300000	075605-16225d -200000-300000
Piping Connections	Liquid Pipe		Ø,mm	6.35	6.35
			Ø, inch	1/4	1/4
	Gas Pipe		Ø,mm	9.52	9.52
			Ø, inch	3/8	3/8
	Drain Pipe		Ø,mm	VP20 (OD 26,ID 20)	VP20 (OD 26,ID 20)
Refrigerant	Type		-	R410A	R410A
	Control Method		-	EEV NOT INCLUDED	EEV NOT INCLUDED
Sound	Sound Pressure	High / Mid / Low	dBA	**31 / 29 / 27**	**36 / 33 / 30**
Dimensions	Net Weight		kg	10.5	11
	Shipping Weight		kg	13.5	14
	Net Dimensions (W×H×D)		mm	970 x 135 x 410	970 x 135 x 410
	Shipping Dimensions (W×H×D)		mm	1164 x 212 x 478	1164 x 212 x 478
Panel Size	Panel Model		-	PSSMA	PSSMA
	Panel Net Weight		kg	3.0	3.0
	Shipping Weight		kg	5.0	5.0
	Net Dimensions (W×H×D)		mm	1180 x 25 x 460	1180 x 25 x 460
	Shipping Dimensions (W×H×D)		mm	1259 x 144 x 539	1259 x 144 x 539
Additional Accessories	Drain Pump	Drain Pump	- /Model	Built-in	Built-in
		Max. lifting Height / Displacement	mm / liter/ h	750 / 24	750 / 24
	Air Filter		-	Long life filter	Long life filter

* All figures comply with EN14511

1) Nominal cooling capacities are based on;
Indoor temperature : 27°C DB, 19°C WB / Outdoor temperature : 35°C DB, Equivalent refrigerant piping : 7.5m, Level difference : 0m

2) Nominal heating capacities are based on;
Indoor temperature : 20°C DB, 15°C WB / Outdoor temperature : 7°C DB, 6°C WB, Equivalent refrigerant piping : 7.5, Level difference : 0m

3) Sound level was acquired in an anechoic room. Thus actual noise level may be different depending on the installation conditions.

4) These products contain R410A which is fluorinated greenhouse gas.

1 Specifications

1-2. Indoor units

3) 4Way Cassette (600x600)



Model Name				AJN016NDEHA/EU	AJN020NDEHA/EU	AJN026NDEHA/EU
Power Supply			Ø, #, V, Hz	1,2,220-240,50	1,2,220-240,50	1,2,220-240,50
Mode			-	HP/HR	HP/HR	HP/HR
Performance	Capacity (Nominal)	Cooling [1]	kW	1.60	2	2.6
			Btu/h	5500	6800	8900
		Heating [2]	kW	2.00	2.2	2.9
			Btu/h	6800	7500	9900
Power	Power Input (Nominal)	Cooling [1]	W	19	19	19
		Heating [2]	W	19	19	19
	Current Input (Nominal)	Cooling [1]	A	0.51	0.51	0.51
		Heating [2]	A	0.51	0.51	0.51
Fan	Motor	Type	-	Turbo Fan	Turbo Fan	Turbo Fan
		Output	W	65	65	65
		Number of unit	EA	1	1	1
	Air Flow Rate	High / Mid / Low	CMM	9.90/8.20/6.90	9.90/8.20/6.90	9.90/8.20/6.90
	External Pressure	Min / Std / Max	mmAq	-	-	-
			Pa	-	-	-
Option Code			-	01507F-1660F8-231014-300000	01507F-1660F8-231416-300000	01507F-1660F8-231A21-300000
Piping Connections	Liquid Pipe		Ø,mm	6.35	6.35	6.35
			Ø, inch	1/4"	1/4"	1/4"
	Gas Pipe		Ø,mm	9.52	9.52	9.52
			Ø, inch	3/8"	3/8"	3/8"
	Drain Pipe		Ø,mm	VP25 (OD 32,ID 25)	VP25 (OD 32,ID 25)	VP25 (OD 32,ID 25)
Refrigerant	Type		-	R410A	R410A	R410A
	Control Method		-	EEV NOT INCLUDED	EEV NOT INCLUDED	EEV NOT INCLUDED
Field Wiring	Power Source Wire		mm^2	1/-	1/-	1/-
	Transmission Cable		mm^2	0.75/1	0.75/1	0.75/1
Sound	Sound Pressure	High / Mid / Low	dBA	33 / 29 / 26	33 / 29 / 26	33 / 29 / 27
Dimensions	Net Weight		kg	11	11	11
	Shipping Weight		kg	13	13	13
	Net Dimensions (W×H×D)		mm	575 x 250 x 575	575 x 250 x 575	575 x 250 x 575
	Shipping Dimensions (W×H×D)		mm	623 x 298 x 653	623 x 298 x 653	623 x 298 x 653
Panel Size	Panel Model		-	PC4SUSMA	PC4SUSMA	PC4SUSMA
	Panel Net Weight		kg	2.7	2.7	2.7
	Shipping Weight		kg	4.2	4.2	4.2
	Net Dimensions (W×H×D)		mm	670 x 45 x 670	670 x 45 x 670	670 x 45 x 670
	Shipping Dimensions (W×H×D)		mm	714 x 106 x 724	714 x 106 x 724	714 x 106 x 724
Additional Accessories	Drain Pump	Drain Pump	- /Model	Built-in	Built-in	Built-in
		Max. lifting Height / Displacement	mm / liter/ h	750 / 24	750 / 24	750 / 24
	Air Filter		-	Long life filter	Long life filter	Long life filter

* All figures comply with EN14511

1) Nominal cooling capacities are based on;
Indoor temperature : 27°C DB, 19°C WB / Outdoor temperature : 35°C DB, Equivalent refrigerant piping : 7.5m , Level difference : 0m

2) Nominal heating capacities are based on;
Indoor temperature : 20°C DB, 15°C WB / Outdoor temperature : 7°C DB, 6°C WB, Equivalent refrigerant piping : 7.5m, Level difference : 0m

3) Sound level was acquired in an anechoic room. Thus actual noise level may be different depending on the installation conditions.

4) These products contain R410A which is fluorinated greenhouse gas.





Model Name				AJN035NDEHA/EU	AJN052NDEHA/EU
Power Supply			Ø, #, V, Hz	1,2,220-240,50	1,2,220-240,50
Mode			-	HP/HR	HP/HR
Performance	Capacity (Nominal)	Cooling [1]	kW	3.5	5.2
			Btu/h	11900	17700
		Heating [2]	kW	3.8	5.6
			Btu/h	13000	19100
Power	Power Input (Nominal)	Cooling [1]	W	22	28
		Heating [2]	W	22	28
	Current Input (Nominal)	Cooling [1]	A	0.52	0.53
		Heating [2]	A	0.52	0.53
Fan	Motor	Type	-	Turbo Fan	Turbo Fan
		Output	W	65	65
		Number of unit	EA	1	1
	Air Flow Rate	High / Mid / Low	CMM	10.70/9.00/7.40	12.40/10.70/9.00
	External Pressure	Min / Std / Max	mmAq	-	-
			Pa	-	-
Option Code			-	01507F-166219-232328-300000	01507F-17625D-23343C-300000
Piping Connections	Liquid Pipe		Ø,mm	6.35	6.35
			Ø, inch	1/4"	1/4"
	Gas Pipe		Ø,mm	9.52	12.7
			Ø, inch	3/8"	1/2"
	Drain Pipe		Ø,mm	VP25 (OD 32,ID 25)	VP25 (OD 32,ID 25)
Refrigerant	Type		-	R410A	R410A
	Control Method		-	EEV NOT INCLUDED	EEV NOT INCLUDED
Field Wiring	Power Source Wire		mm^2	1/-	1/-
	Transmission Cable		mm^2	0.75/1	0.75/1
Sound	Sound Pressure	High / Mid / Low	dBA	35 / 31 / 27	39 / 36 / 32
Dimensions	Net Weight		kg	11	11.7
	Shipping Weight		kg	13	13.7
	Net Dimensions (W×H×D)		mm	575 x 250 x 575	575 x 250 x 575
	Shipping Dimensions (W×H×D)		mm	623 x 298 x 653	623 x 298 x 653
Panel Size	Panel Model		-	PC4SUSMA	PC4SUSMA
	Panel Net Weight		kg	2.7	2.7
	Shipping Weight		kg	4.2	4.2
	Net Dimensions (W×H×D)		mm	670 x 45 x 670	670 x 45 x 670
	Shipping Dimensions (W×H×D)		mm	714 x 106 x 724	714 x 106 x 724
Additional Accessories	Drain Pump	Drain Pump	- /Model	Built-in	Built-in
		Max. lifting Height / Displacement	mm / liter/ h	750 / 24	750 / 24
	Air Filter		-	Long life filter	Long life filter

* All figures comply with EN14511

1) Nominal cooling capacities are based on;
Indoor temperature : 27°C DB, 19°C WB / Outdoor temperature : 35°C DB, Equivalent refrigerant piping : 7.5m, Level difference : 0m

2) Nominal heating capacities are based on;
Indoor temperature : 20°C DB, 15°C WB / Outdoor temperature : 7°C DB, 6°C WB, Equivalent refrigerant piping : 7.5m, Level difference : 0m

3) Sound level was acquired in an anechoic room. Thus actual noise level may be different depending on the installation conditions.

4) These products contain R410A which is fluorinated greenhouse gas.

1 Specifications

1-2. Indoor units

4) Slim & MSP Duct





Model Name				NJ026LHXEA	NJ035LHXEA	MH052FUEA
Power Supply			Ø, #, V, Hz	1, 2, 220~240, 50	1, 2, 220~240, 50	1, 2, 220~240, 50
Mode			-	HP	HP	HP
Performance	Capacity (Nominal)	Cooling [1]	kW	2.6	3.5	5.2
			Btu/h	8,900	11,900	17,700
		Heating [2]	kW	2.9	3.8	6.0
			Btu/h	9,900	13,000	20,500
Power	Power Input (Nominal)	Cooling [1]	W	80	80	170
		Heating [2]	W	80	80	170
	Current Input (Nominal)	Cooling [1]	A	0.40	0.40	1.04
		Heating [2]	A	0.40	0.40	1.04
Fan	Motor	Type	-	Sirroco Fan / SSR	Sirroco Fan / SSR	Sirroco Fan / SSR
		Output	W	29	29	124
		Number of unit	EA	1	1	1
	Air Flow Rate	High / Mid / Low	CMM	8.6 / - / -	9.8 / - / -	16.3 / - / -
	External Pressure	Min / Std / Max	mmAq	0/2/4	0/2/4	0/4/6
			Pa	0/19.6/39.2	0/19.6/39.2	0/392/78.5
Option Code			-	015201-14020C -200000-300000	015201-16026E -200000-300000	012221-1943A2 -200000-300000
Piping Connections	Liquid Pipe		Ø,mm	6.35	6.35	6.35
			Ø, inch	1/4	1/4	1/4
	Gas Pipe		Ø,mm	9.52	9.52	12.7
			Ø, inch	3/8	3/8	1/2
	Drain Pipe		Ø,mm	VP25 (OD 32,ID 25)	VP25 (OD 32,ID 25)	VP25 (OD 32,ID 25)
Refrigerant	Type		-	R410A	R410A	R410A
	Control Method		-	EEV NOT INCLUDED	EEV NOT INCLUDED	EEV NOT INCLUDED
Sound	Sound Pressure	High / Mid / Low	dBA	30 / 28 / 25	32 / 30 / 27	42 / 41 / 39
Dimensions	Net Weight		kg	26	26	29
	Shipping Weight		kg	31	31	34
	Net Dimensions (W×H×D)		mm	900 x 199 x 600	900 x 199 x 600	900 x 260 x 480
	Shipping Dimensions (W×H×D)		mm	1,151 x 280 x 709	1,151 x 280 x 709	1146 x 345 x 584
Panel Size	Panel Model		-	-	-	-
	Panel Net Weight		kg	-	-	-
	Shipping Weight		kg	-	-	-
	Net Dimensions (W×H×D)		mm	-	-	-
	Shipping Dimensions (W×H×D)		mm	-	-	-
Additional Accessories	Drain Pump	Drain Pump	- /Model	Optional / MDP-E075SEE3	Optional / MDP-E075SEE3	Optional / MDP-M075SGU3
		Max. lifting Height / Displacement	mm / liter/ h	750 / 24	750 / 24	750 / 24
	Air Filter		-	Long life filter	Long life filter	Long life filter

* All figures comply with EN14511

1) Nominal cooling capacities are based on;
Indoor temperature : 27°C DB, 19°C WB / Outdoor temperature : 35°C DB, Equivalent refrigerant piping : 7.5m , Level difference : 0m

2) Nominal heating capacities are based on;
Indoor temperature : 20°C DB, 15°C WB / Outdoor temperature : 7°C DB, 6°C WB, Equivalent refrigerant piping : 7.5m, Level difference : 0m

3) Sound level was acquired in an anechoic room. Thus actual noise level may be different depending on the installation conditions.

4) These products contain R410A which is fluorinated greenhouse gas.

1 Specifications

1-2. Indoor units

5) Console





Model Name				MH026FJEA	MH035FJEA	MH052FJEA
Power Supply			Ø, #, V, Hz	1, 2, 220~240, 50	1, 2, 220~240, 50	1, 2, 220~240, 50
Mode			-	HP	HP	HP
Performance	Capacity (Nominal)	Cooling 1)	kW	2.6	3.5	5.2
			Btu/h	8,900	11,900	17,700
		Heating 2)	kW	2.9	3.8	5.6
			Btu/h	9,900	13,000	19,100
Power	Power Input (Nominal)	Cooling 1)	W	30	35	50
		Heating 2)	W	30	35	50
	Current Input (Nominal)	Cooling 1)	A	0.25	0.29	0.35
		Heating 2)	A	0.25	0.29	0.35
Fan	Motor	Type	-	Turbo Fan / BLDC	Turbo Fan / BLDC	Turbo Fan / BLDC
		Output	W	37	37	37
		Number of unit	EA	1	1	1
	Air Flow Rate	High / Mid / Low	CMM	9.0 / - / -	10.5 / - / -	11.2 / - / -
	External Pressure	Min / Std / Max	mmAq	-	-	-
			Pa	-	-	-
Option Code			-	087417-1400B6 -200000-300000	087417-1600D8 -200000-300000	087417-1900F9 -200000-300000
Piping Connections	Liquid Pipe		Ø,mm	6.35	6.35	6.35
			Ø, inch	1/4	1/4	1/4
	Gas Pipe		Ø,mm	9.52	9.52	12.7
			Ø, inch	3/8	3/8	1/2
	Drain Pipe		Ø,mm	ID 18 Hose	ID 18 Hose	ID 18 Hose
Refrigerant	Type		-	R410A	R410A	R410A
	Control Method		-	EEV NOT INCLUDED	EEV NOT INCLUDED	EEV NOT INCLUDED
Sound	Sound Pressure	High / Mid / Low	dBA	36 / 32 / 29	42 / 35 / 32	42 / 38 / 35
Dimensions	Net Weight		kg	15	15	15
	Shipping Weight		kg	19	19	19
	Net Dimensions (W×H×D)		mm	720 x 620 x 199	720 x 620 x 199	720 x 620 x 199
	Shipping Dimensions (W×H×D)		mm	810 x 710 x 295	810 x 710 x 295	810 x 710 x 295
Panel Size	Panel Model		-	-	-	-
	Panel Net Weight		kg	-	-	-
	Shipping Weight		kg	-	-	-
	Net Dimensions (W×H×D)		mm	-	-	-
	Shipping Dimensions (W×H×D)		mm	-	-	-
Additional Accessories	Drain Pump	Drain Pump	- /Model	-	-	-
		Max. lifting Height / Displacement	mm / liter/ h	-	-	-
	Air Filter		-	Long life filter	Long life filter	Long life filter

* All figures comply with EN14511

1) Nominal cooling capacities are based on;
Indoor temperature : 27°C DB, 19°C WB / Outdoor temperature : 35°C DB, Equivalent refrigerant piping : 7.5m , Level difference : 0m

2) Nominal heating capacities are based on;
Indoor temperature : 20°C DB, 15°C WB / Outdoor temperature : 7°C DB, 6°C WB, Equivalent refrigerant piping : 7.5m, Level difference : 0m

3) Sound level was acquired in an anechoic room. Thus actual noise level may be different depending on the installation conditions.

4) These products contain R410A which is fluorinated greenhouse gas.

1 Specifications

1-2. Indoor units

6) AR9570





Type				AR9570	AR9570
Model Name				AR09JSPFBWKNEU	AR12JSPFBWKNEU
Power Supply			Ø, #, V, Hz	1,2,220-240,50	1,2,220-240,50
Mode			-	HP/HR	HP/HR
Performance	Capacity (Nominal)	Cooling	kW	2.50	3.50
			Btu/h	8,500	11,900
		Heating	kW	3.20	4.00
			Btu/h	10,900	13,600
Power	Power Input (Nominal)	Cooling	W	30.00	30.00
		Heating	W	30.00	30.00
	Current Input (Nominal)	Cooling	A	0.30	0.30
		Heating	A	0.30	0.30
Fan	Motor	Type	-	Cross flow Fan	Cross flow Fan
		Output x n	W	27 x 1	27 x 1
	Air Flow Rate	High / Mid / Low	CMM	11.00	11.00
			l/s	183.33	183.33
	External Pressure	Min / Std / Max	mmAq	-	-
			Pa	-	-
Piping Connections	Liquid Pipe		Ø, mm	6.35	6.35
			Ø, inch	1/4"	1/4"
	Gas Pipe		Ø, mm	9.52	9.52
			Ø, inch	3/8"	3/8"
	Drain Pipe		Ø, mm	ID18 HOSE	ID18 HOSE
Refrigerant	Type		-	R410A	R410A
	Control Method		-	EEV NOT INCLUDED	EEV NOT INCLUDED
Sound	Pressure	High/Mid/Low	dBA	38.0 / 29.0 / 16.0	40.0 / 30.0 / 16.0
	Power	Cooling		57.0	59.0
Dimension	New Weight		kg	12.00	12.00
	Shipping Weight		kg	14.50	14.50
	Net Dimensions (WxHxD)		mm	936 x 267 x 264	936 x 267 x 264
	Shipping Dimensions (WxHxD)		mm	1,020 x 326 x 345	1,020 x 326 x 345
Panel Size	Panel Model		-	-	-
	Panel New Weight		kg	-	-
	Shipping Weight		kg	-	-
	Net Dimensions (WxHxD)		mm	-	-
	Shipping Dimensions (WxHxD)		mm	-	-
Additional Accessories	Drain Pump	Drain Pump	- / Model	-	-
		Max. lifting Height / Displacement	mm / liter / h	-	-
	Air Filter		-	-	-

* Specifications may be subject to change without prior notice.
1) Nominal cooling capacities are based on;
  - Indoor temperature : 27°C DB, 19°C WB
  - Outdoor temperature : 35°C DB, 24°C WB, Equivalent refrigerant piping : 5m, Level differences : 0m
2) Nominal heating capacities are based on;
  - Indoor temperature : 20°C DB, 15°C WB
  - Outdoor temperature : 7°C DB, 6°C WB, Equivalent refrigerant piping : 5m, Level differences : 0m
3) Sound pressure was acquired in an anechoic room. Thus actual noise level may be different depending on the installation conditions.
4) Please refer to "3. Dimensional drawings" for installation sizing.
5) These products contain R410A which is fluorinated greenhouse gas.

1 Specifications

1-2. Indoor units

7) AR7580



Type				AR7580	AR7580	AR7580
Model Name				AR07KSPDBWKNEU	AR09KSPDBWKNEU	AR12KSPDBWKNEU
Power Supply			Ø, #, V, Hz	1,2,220-240,50	1,2,220-240,50	1,2,220-240,50
Mode			-	HP/HR	HP/HR	HP/HR
Performance	Capacity (Nominal)	Cooling	kW	2.00	2.50	3.50
			Btu/h	6,800	8,500	11,900
		Heating	kW	2.20	3.20	4.00
			Btu/h	7,500	10,900	13,600
Power	Power Input (Nominal)	Cooling	W	30.00	30.00	30.00
		Heating	W	30.00	30.00	30.00
	Current Input (Nominal)	Cooling	A	0.30	0.30	0.30
		Heating	A	0.30	0.30	0.30
Fan	Motor	Type	-	Cross flow Fan	Cross flow Fan	Cross flow Fan
		Output x n	W	27 x 1	27 x 1	27 x 1
	Air Flow Rate	High / Mid / Low	CMM	10.00	11.00	12.00
			l/s	166.67	183.33	200.00
	External Pressure	Min / Std / Max	mmAq	-	-	-
			Pa	-	-	-
Piping Connections	Liquid Pipe		Ø, mm	6.35	6.35	6.35
			Ø, inch	1/4"	1/4"	1/4"
	Gas Pipe		Ø, mm	9.52	9.52	9.52
			Ø, inch	3/8"	3/8"	3/8"
	Drain Pipe		Ø, mm	ID18 HOSE	ID18 HOSE	ID18 HOSE
Refrigerant	Type		-	R410A	R410A	R410A
	Control Method		-	EEV NOT INCLUDED	EEV NOT INCLUDED	EEV NOT INCLUDED
Sound	Pressure	High/Mid/Low	dBA	38.0 / 29.0 / 16.0	38.0 / 29.0 / 16.0	40.0 / 30.0 / 16.0
	Power	Cooling		56.0	56.0	58.0
Dimension	New Weight		kg	10.20	10.20	10.20
	Shipping Weight		kg	12.50	12.50	12.50
	Net Dimensions (WxHxD)		mm	826 x 261 x 261	826 x 261 x 261	826 x 261 x 261
	Shipping Dimensions (WxHxD)		mm	886 x 317 x 335	886 x 317 x 335	886 x 317 x 335
Panel Size	Panel Model		-	-	-	-
	Panel New Weight		kg	-	-	-
	Shipping Weight		kg	-	-	-
	Net Dimensions (WxHxD)		mm	-	-	-
	Shipping Dimensions (WxHxD)		mm	-	-	-
Additional Accessories	Drain Pump	Drain Pump	- / Model	-	-	-
		Max. lifting Height / Displacement	mm / liter / h	-	-	-
	Air Filter		-	-	-	-

* Specifications may be subject to change without prior notice.
1) Nominal cooling capacities are based on;
  - Indoor temperature : 27°C DB, 19°C WB
  - Outdoor temperature : 35°C DB, 24°C WB, Equivalent refrigerant piping : 5m, Level differences : 0m
2) Nominal heating capacities are based on;
  - Indoor temperature : 20°C DB, 15°C WB
  - Outdoor temperature : 7°C DB, 6°C WB, Equivalent refrigerant piping : 5m, Level differences : 0m
3) Sound pressure was acquired in an anechoic room. Thus actual noise level may be different depending on the installation conditions.
4) Please refer to "3. Dimensional drawings" for installation sizing.
5) These products contain R410A which is fluorinated greenhouse gas.

1 Specifications

1-2. Indoor units

7) AR7580





Type				AR7580	AR7580
Model Name				AR18KSPDBWKNEU	AR24KSPDBWKNEU
Power Supply			Ø, #, V, Hz	1,2,220-240,50	1,2,220-240,50
Mode			-	HP/HR	HP/HR
Performance	Capacity (Nominal)	Cooling	kW	5.00	6.80
			Btu/h	17,100	23,200
		Heating	kW	6.00	8.00
			Btu/h	20,500	27,300
Power	Power Input (Nominal)	Cooling	W	50.00	50.00
		Heating	W	50.00	50.00
	Current Input (Nominal)	Cooling	A	0.40	0.40
		Heating	A	0.40	0.40
Fan	Motor	Type	-	Cross flow Fan	Cross flow Fan
		Output x n	W	27 x 1	27 x 1
	Air Flow Rate	High / Mid / Low	CMM	19.00	19.00
			l/s	316.67	316.67
	External Pressure	Min / Std / Max	mmAq	-	-
			Pa	-	-
Piping Connections	Liquid Pipe		Ø, mm	6.35	6.35
			Ø, inch	1/4"	1/4"
	Gas Pipe		Ø, mm	12.70	15.88
			Ø, inch	1/2"	5/8"
	Drain Pipe		Ø, mm	ID18 HOSE	ID18 HOSE
Refrigerant	Type		-	R410A	R410A
	Control Method		-	EEV NOT INCLUDED	EEV NOT INCLUDED
Sound	Pressure	High/Mid/Low	dBA	42.0 / 30.0 / 25.0	43.0 / 34.0 / 26.0
	Power	Cooling		58.0	62.0
Dimension	New Weight		kg	15.50	15.50
	Shipping Weight		kg	18.50	18.50
	Net Dimensions (WxHxD)		mm	1,065 x 301 x 294	1,065 x 301 x 294
	Shipping Dimensions (WxHxD)		mm	1,123 x 354 x 384	1,123 x 354 x 384
Panel Size	Panel Model		-	-	-
	Panel New Weight		kg	-	-
	Shipping Weight		kg	-	-
	Net Dimensions (WxHxD)		mm	-	-
	Shipping Dimensions (WxHxD)		mm	-	-
Additional Accessories	Drain Pump	Drain Pump	- / Model	-	-
		Max. lifting Height / Displacement	mm / liter / h	-	-
	Air Filter		-	-	-

* Specifications may be subject to change without prior notice.
1) Nominal cooling capacities are based on;
  - Indoor temperature : 27°C DB, 19°C WB
  - Outdoor temperature : 35°C DB, 24°C WB, Equivalent refrigerant piping : 5m, Level differences : 0m
2) Nominal heating capacities are based on;
  - Indoor temperature : 20°C DB, 15°C WB
  - Outdoor temperature : 7°C DB, 6°C WB, Equivalent refrigerant piping : 5m, Level differences : 0m
3) Sound pressure was acquired in an anechoic room. Thus actual noise level may be different depending on the installation conditions.
4) Please refer to "3. Dimensional drawings" for installation sizing.
5) These products contain R410A which is fluorinated greenhouse gas.

1 Specifications

1-2. Indoor units

8) AR5580/5680



Type				AR5680	AR5580	AR5680
Model Name				AR07KSWNAWKNEU	AR07KSWSAWKNEU	AR09KSWNAWKNET
Power Supply			Ø, #, V, Hz	1,2,220-240,50	1,2,220-240,50	1,2,220-240,50
Mode			-	HP/HR	HP/HR	HP/HR
Performance	Capacity (Nominal)	Cooling	kW	2.00	2.00	2.50
			Btu/h	6,800	6,800	8,500
		Heating	kW	2.20	2.20	3.20
			Btu/h	7,500	7,500	10,900
Power	Power Input (Nominal)	Cooling	W	30.00	30.00	30.00
		Heating	W	30.00	30.00	30.00
	Current Input (Nominal)	Cooling	A	0.30	0.30	0.30
		Heating	A	0.30	0.30	0.30
Fan	Motor	Type	-	Cross flow Fan	Cross flow Fan	Cross flow Fan
		Output x n	W	27 x 1	27 x 1	27 x 1
	Air Flow Rate	High / Mid / Low	CMM	10.00	10.00	11.00
			l/s	166.67	166.67	183.33
	External Pressure	Min / Std / Max	mmAq	-	-	-
			Pa	-	-	-
Piping Connections	Liquid Pipe		Ø, mm	6.35	6.35	6.35
			Ø, inch	1/4"	1/4"	1/4"
	Gas Pipe		Ø, mm	9.52	9.52	9.52
			Ø, inch	3/8"	3/8"	3/8"
	Drain Pipe		Ø, mm	ID18 HOSE	ID18 HOSE	ID18 HOSE
Refrigerant	Type		-	R410A	R410A	R410A
	Control Method		-	EEV NOT INCLUDED	EEV NOT INCLUDED	EEV NOT INCLUDED
Sound	Pressure	High/Mid/Low	dBA	37.0 / 27.0 / 19.0	37.0 / 27.0 / 19.0	37.0 / 27.0 / 19.0
	Power	Cooling		54.0	54.0	54.0
Dimension	New Weight		kg	9.50	9.50	9.50
	Shipping Weight		kg	11.30	11.30	11.30
	Net Dimensions (WxHxD)		mm	826 x 261 x 261	826 x 261 x 261	826 x 261 x 261
	Shipping Dimensions (WxHxD)		mm	886 x 317 x 335	886 x 317 x 335	886 x 317 x 335
Panel Size	Panel Model		-	-	-	-
	Panel New Weight		kg	-	-	-
	Shipping Weight		kg	-	-	-
	Net Dimensions (WxHxD)		mm	-	-	-
	Shipping Dimensions (WxHxD)		mm	-	-	-
Additional Accessories	Drain Pump	Drain Pump	- / Model	-	-	-
		Max. lifting Height / Displacement	mm / liter / h	-	-	-
	Air Filter		-	-	-	-

* Specifications may be subject to change without prior notice.
1) Nominal cooling capacities are based on;
  - Indoor temperature : 27°C DB, 19°C WB
  - Outdoor temperature : 35°C DB, 24°C WB, Equivalent refrigerant piping : 5m, Level differences : 0m
2) Nominal heating capacities are based on;
  - Indoor temperature : 20°C DB, 15°C WB
  - Outdoor temperature : 7°C DB, 6°C WB, Equivalent refrigerant piping : 5m, Level differences : 0m
3) Sound pressure was acquired in an anechoic room. Thus actual noise level may be different depending on the installation conditions.
4) Please refer to "3. Dimensional drawings" for installation sizing.
5) These products contain R410A which is fluorinated greenhouse gas.

1 Specifications

1-2. Indoor units

8) AR5580/5680



Type				AR5580	AR5680	AR5580
Model Name				AR09KSWSBWKNET	AR12KSWNAWKNET	AR12KSWSBWKNET
Power Supply			Ø, #, V, Hz	1,2,220-240,50	1,2,220-240,50	1,2,220-240,50
Mode			-	HP/HR	HP/HR	HP/HR
Performance	Capacity (Nominal)	Cooling	kW	2.50	3.50	3.50
			Btu/h	8,500	11,900	11,900
		Heating	kW	3.20	3.80	3.80
			Btu/h	10,900	13,000	13,000
Power	Power Input (Nominal)	Cooling	W	30.00	30.00	30.00
		Heating	W	30.00	30.00	30.00
	Current Input (Nominal)	Cooling	A	0.30	0.30	0.30
		Heating	A	0.30	0.30	0.30
Fan	Motor	Type	-	Cross flow Fan	Cross flow Fan	Cross flow Fan
		Output x n	W	27 x 1	27 x 1	27 x 1
	Air Flow Rate	High / Mid / Low	CMM	11.00	12.00	12.00
			l/s	183.33	200.00	200.00
	External Pressure	Min / Std / Max	mmAq	-	-	-
			Pa	-	-	-
Piping Connections	Liquid Pipe		Ø, mm	6.35	6.35	6.35
			Ø, inch	1/4"	1/4"	1/4"
	Gas Pipe		Ø, mm	9.52	9.52	9.52
			Ø, inch	3/8"	3/8"	3/8"
	Drain Pipe		Ø, mm	ID18 HOSE	ID18 HOSE	ID18 HOSE
Refrigerant	Type		-	R410A	R410A	R410A
	Control Method		-	EEV NOT INCLUDED	EEV NOT INCLUDED	EEV NOT INCLUDED
Sound	Pressure	High/Mid/Low	dBA	37.0 / 27.0 / 19.0	38.0 / 28.0 / 19.0	38.0 / 28.0 / 19.0
	Power	Cooling		54.0	56.0	56.0
Dimension	New Weight		kg	9.50	9.50	9.50
	Shipping Weight		kg	11.30	11.30	11.30
	Net Dimensions (WxHxD)		mm	826 x 261 x 261	826 x 261 x 261	826 x 261 x 261
	Shipping Dimensions (WxHxD)		mm	886 x 317 x 335	886 x 317 x 335	886 x 317 x 335
Panel Size	Panel Model		-	-	-	-
	Panel New Weight		kg	-	-	-
	Shipping Weight		kg	-	-	-
	Net Dimensions (WxHxD)		mm	-	-	-
	Shipping Dimensions (WxHxD)		mm	-	-	-
Additional Accessories	Drain Pump	Drain Pump	- / Model	-	-	-
		Max. lifting Height / Displacement	mm / liter / h	-	-	-
	Air Filter		-	-	-	-

* Specifications may be subject to change without prior notice.
1) Nominal cooling capacities are based on;
 - Indoor temperature : 27°C DB, 19°C WB
 - Outdoor temperature : 35°C DB, 24°C WB, Equivalent refrigerant piping : 5m, Level differences : 0m
2) Nominal heating capacities are based on;
 - Indoor temperature : 20°C DB, 15°C WB
 - Outdoor temperature : 7°C DB, 6°C WB, Equivalent refrigerant piping : 5m, Level differences : 0m
3) Sound pressure was acquired in an anechoic room. Thus actual noise level may be different depending on the installation conditions.
4) Please refer to "3. Dimensional drawings" for installation sizing.
5) These products contain R410A which is fluorinated greenhouse gas.



Type				AR5680	AR5580	AR5680
Model Name				AR18KSWNAWKNEU	AR18KSWSAWKNEU	AR24KSWNAWKNEU
Power Supply			Ø, #, V, Hz	1,2,220-240,50	1,2,220-240,50	1,2,220-240,50
Mode			-	HP/HR	HP/HR	HP/HR
Performance	Capacity (Nominal)	Cooling	kW	5.00	5.00	6.80
			Btu/h	17,100	17,100	23,200
		Heating	kW	6.00	6.00	7.80
			Btu/h	20,500	20,500	26,600
Power	Power Input (Nominal)	Cooling	W	50.00	50.00	50.00
		Heating	W	50.00	50.00	50.00
	Current Input (Nominal)	Cooling	A	0.40	0.40	0.40
		Heating	A	0.40	0.40	0.40
Fan	Motor	Type	-	Cross flow Fan	Cross flow Fan	Cross flow Fan
		Output x n	W	27 x 1	27 x 1	27 x 1
	Air Flow Rate	High / Mid / Low	CMM	19.00	19.00	21.00
			l/s	316.67	316.67	350.00
	External Pressure	Min / Std / Max	mmAq	-	-	-
			Pa	-	-	-
Piping Connections	Liquid Pipe		Ø, mm	6.35	6.35	6.35
			Ø, inch	1/4"	1/4"	1/4"
	Gas Pipe		Ø, mm	12.70	12.70	15.88
			Ø, inch	1/2"	1/2"	5/8"
	Drain Pipe		Ø, mm	ID18 HOSE	ID18 HOSE	ID18 HOSE
Refrigerant	Type		-	R410A	R410A	R410A
	Control Method		-	EEV NOT INCLUDED	EEV NOT INCLUDED	EEV NOT INCLUDED
Sound	Pressure	High/Mid/Low	dBA	41.0 / 32.0 / 25.0	41.0 / 32.0 / 25.0	43.0 / 34.0 / 26.0
	Power	Cooling		58.0	58.0	62.0
Dimension	New Weight		kg	13.00	13.00	13.50
	Shipping Weight		kg	16.00	16.00	16.50
	Net Dimensions (WxHxD)		mm	1,065 x 301 x 294	1,065 x 301 x 294	1,065 x 301 x 294
	Shipping Dimensions (WxHxD)		mm	1,123 x 354 x 384	1,123 x 354 x 384	1,123 x 354 x 384
Panel Size	Panel Model		-	-	-	-
	Panel New Weight		kg	-	-	-
	Shipping Weight		kg	-	-	-
	Net Dimensions (WxHxD)		mm	-	-	-
	Shipping Dimensions (WxHxD)		mm	-	-	-
Additional Accessories	Drain Pump	Drain Pump	- / Model	-	-	-
		Max. lifting Height / Displacement	mm / liter / h	-	-	-
	Air Filter		-	-	-	-

* Specifications may be subject to change without prior notice.
1) Nominal cooling capacities are based on;
  - Indoor temperature : 27°C DB, 19°C WB
  - Outdoor temperature : 35°C DB, 24°C WB, Equivalent refrigerant piping : 5m, Level differences : 0m
2) Nominal heating capacities are based on;
  - Indoor temperature : 20°C DB, 15°C WB
  - Outdoor temperature : 7°C DB, 6°C WB, Equivalent refrigerant piping : 5m, Level differences : 0m
3) Sound pressure was acquired in an anechoic room. Thus actual noise level may be different depending on the installation conditions.
4) Please refer to "3. Dimensional drawings" for installation sizing.
5) These products contain R410A which is fluorinated greenhouse gas.

1 Specifications

1-2. Indoor units

8) AR5580/5680



Type				AR5580
Model Name				AR24KSWSAWKNEU
Power Supply			Ø, #, V, Hz	1,2,220-240,50
Mode			-	HP/HR
Performance	Capacity (Nominal)	Cooling	kW	6.80
			Btu/h	23,200
		Heating	kW	7.80
			Btu/h	26,600
Power	Power Input (Nominal)	Cooling	W	50.00
		Heating	W	50.00
	Current Input (Nominal)	Cooling	A	0.40
		Heating	A	0.40
Fan	Motor	Type	-	Cross flow Fan
		Output x n	W	27 x 1
	Air Flow Rate	High / Mid / Low	CMM	21.00
			l/s	350.00
	External Pressure	Min / Std / Max	mmAq	-
			Pa	-
Piping Connections	Liquid Pipe		Ø, mm	6.35
			Ø, inch	1/4"
	Gas Pipe		Ø, mm	15.88
			Ø, inch	5/8"
	Drain Pipe		Ø, mm	ID18 HOSE
Refrigerant	Type		-	R410A
	Control Method		-	EEV NOT INCLUDED
Sound	Pressure	High/Mid/Low	dBA	43.0 / 34.0 / 26.0
	Power	Cooling		62.0
Dimension	New Weight		kg	13.50
	Shipping Weight		kg	16.50
	Net Dimensions (WxHxD)		mm	1,065 x 301 x 294
	Shipping Dimensions (WxHxD)		mm	1,123 x 354 x 384
Panel Size	Panel Model		-	-
	Panel New Weight		kg	-
	Shipping Weight		kg	-
	Net Dimensions (WxHxD)		mm	-
	Shipping Dimensions (WxHxD)		mm	-
Additional Accessories	Drain Pump	Drain Pump	- / Model	-
		Max. lifting Height / Displacement	mm / liter / h	-
	Air Filter		-	-

* Specifications may be subject to change without prior notice.
1) Nominal cooling capacities are based on;
 - Indoor temperature : 27°C DB, 19°C WB
 - Outdoor temperature : 35°C DB, 24°C WB, Equivalent refrigerant piping : 5m, Level differences : 0m
2) Nominal heating capacities are based on;
 - Indoor temperature : 20°C DB, 15°C WB
 - Outdoor temperature : 7°C DB, 6°C WB, Equivalent refrigerant piping : 5m, Level differences : 0m
3) Sound pressure was acquired in an anechoic room. Thus actual noise level may be different depending on the installation conditions.
4) Please refer to "3. Dimensional drawings" for installation sizing.
5) These products contain R410A which is fluorinated greenhouse gas.

1 Specifications

1-2. Indoor units

9) New Boracay





Type				New boracay	New boracay	New boracay
Model Name				AR07KSFHBWKNEU	AR09KSFHBWKNET	AR12KSFHBWKNET
Power Supply			Ø, #, V, Hz	1,2,220-240,50	1,2,220-240,50	1,2,220-240,50
Mode			-	HP/HR	HP/HR	HP/HR
Performance	Capacity (Nominal)	Cooling	kW	2.00	2.50	3.50
			Btu/h	6,800	8,500	11,900
		Heating	kW	2.20	3.20	3.50
			Btu/h	7,500	10,900	11,900
Power	Power Input (Nominal)	Cooling	W	30.00	30.00	30.00
		Heating	W	30.00	30.00	30.00
	Current Input (Nominal)	Cooling	A	0.30	0.30	0.30
		Heating	A	0.30	0.30	0.30
Fan	Motor	Type	-	Crossflow Fan	Crossflow Fan	Crossflow Fan
		Output x n	W	23 x 1	23 x 1	23 x 1
	Air Flow Rate	High / Mid / Low	CMM	8.00	9.00	10.00
			l/s	133.33	150.00	166.67
	External Pressure	Min / Std / Max	mmAq	-	-	-
			Pa	-	-	-
Piping Connections	Liquid Pipe		Ø, mm	6.35	6.35	6.35
			Ø, inch	1/4"	1/4"	1/4"
	Gas Pipe		Ø, mm	9.52	9.52	9.52
			Ø, inch	3/8"	3/8"	3/8"
	Drain Pipe		Ø, mm	ID18 HOSE	ID18 HOSE	ID18 HOSE
Refrigerant	Type		-	R410A	R410A	R410A
	Control Method		-	EEV NOT INCLUDED	EEV NOT INCLUDED	EEV NOT INCLUDED
Sound	Pressure	High/Mid/Low	dBA	38.0 / 21.0	38.0 / 21.0	42.0 / 21.0
	Power	Cooling		56.0	56.0	59.0
Dimension	New Weight		kg	8.20	8.20	8.20
	Shipping Weight		kg	9.80	9.80	9.80
	Net Dimensions (WxHxD)		mm	820 x 285 x 227	820 x 285 x 227	820 x 285 x 227
	Shipping Dimensions (WxHxD)		mm	880 × 280 × 363	880 × 280 × 363	880 × 280 × 363
Panel Size	Panel Model		-	-	-	-
	Panel New Weight		kg	-	-	-
	Shipping Weight		kg	-	-	-
	Net Dimensions (WxHxD)		mm	-	-	-
	Shipping Dimensions (WxHxD)		mm	-	-	-
Additional Accessories	Drain Pump	Drain Pump	- / Model	-	-	-
		Max. lifting Height / Displacement	mm / liter / h	-	-	-
	Air Filter		-	-	-	-

* Specifications may be subject to change without prior notice.
1) Nominal cooling capacities are based on;
 - Indoor temperature : 27°C DB, 19°C WB
 - Outdoor temperature : 35°C DB, 24°C WB, Equivalent refrigerant piping : 5m, Level differences : 0m
2) Nominal heating capacities are based on;
 - Indoor temperature : 20°C DB, 15°C WB
 - Outdoor temperature : 7°C DB, 6°C WB, Equivalent refrigerant piping : 5m, Level differences : 0m
3) Sound pressure was acquired in an anechoic room. Thus actual noise level may be different depending on the installation conditions.
4) Please refer to "3. Dimensional drawings" for installation sizing.
5) These products contain R410A which is fluorinated greenhouse gas.

1 Specifications

1-2. Indoor units

9) New Boracay





Type				New boracay	New boracay
Model Name				AR18KSFHBWKNEU	AR24KSFHBWKNEU
Power Supply			Ø, #, V, Hz	1,2,220-240,50	1,2,220-240,50
Mode			-	HP/HR	HP/HR
Performance	Capacity (Nominal)	Cooling	kW	5.00	6.80
			Btu/h	17,100	23,200
		Heating	kW	6.00	7.70
			Btu/h	20,500	26,300
Power	Power Input (Nominal)	Cooling	W	50.00	50.00
		Heating	W	50.00	50.00
	Current Input (Nominal)	Cooling	A	0.50	0.50
		Heating	A	0.50	0.50
Fan	Motor	Type	-	Crossflow Fan	Crossflow Fan
		Output x n	W	27 x 1	27 x 1
	Air Flow Rate	High / Mid / Low	CMM	15.50	16.50
			l/s	258.33	275.00
	External Pressure	Min / Std / Max	mmAq	-	-
			Pa	-	-
Piping Connections	Liquid Pipe		Ø, mm	6.35	6.35
			Ø, inch	1/4"	1/4"
	Gas Pipe		Ø, mm	12.70	15.88
			Ø, inch	1/2"	5/8"
	Drain Pipe		Ø, mm	ID18 HOSE	ID18 HOSE
Refrigerant	Type		-	R410A	R410A
	Control Method		-	EEV NOT INCLUDED	EEV NOT INCLUDED
Sound	Pressure	High/Mid/Low	dBA	42.0 / 25.0	44.0 / 28.0
	Power	Cooling		58.0	63.0
Dimension	New Weight		kg	11.5	11.5
	Shipping Weight		kg	14.0	14.0
	Net Dimensions (WxHxD)		mm	1,065 x 298 x 243	1,065 x 298 x 243
	Shipping Dimensions (WxHxD)		mm	1,128 x 299 x 378	1,128 x 299 x 378
Panel Size	Panel Model		-	-	-
	Panel New Weight		kg	-	-
	Shipping Weight		kg	-	-
	Net Dimensions (WxHxD)		mm	-	-
	Shipping Dimensions (WxHxD)		mm	-	-
Additional Accessories	Drain Pump	Drain Pump	- / Model	-	-
		Max. lifting Height / Displacement	mm / liter / h	-	-
	Air Filter		-	-	-

* Specifications may be subject to change without prior notice.
1) Nominal cooling capacities are based on;
- Indoor temperature : 27°C DB, 19°C WB
- Outdoor temperature : 35°C DB, 24°C WB, Equivalent refrigerant piping : 5m, Level differences : 0m
2) Nominal heating capacities are based on;
- Indoor temperature : 20°C DB, 15°C WB
- Outdoor temperature : 7°C DB, 6°C WB, Equivalent refrigerant piping : 5m, Level differences : 0m
3) Sound pressure was acquired in an anechoic room. Thus actual noise level may be different depending on the installation conditions.
4) Please refer to "3. Dimensional drawings" for installation sizing.
5) These products contain R410A which is fluorinated greenhouse gas.

2 Combination table

2-1. AJ040FCJ2EH/EU

		Indoor Index					Cooling Capacity (W)					Capacity W			Power Consumption W			Current A			Effic. NOM. Cooling. At 35℃/27℃	Qce	SEASONAL EFFICIENCY (ACCORDING EN14825)	
		A	B	C	D	E	A	B	C	D	E	MIN	NOM	MAX	MIN	NOM	MAX	MIN	NOM	MAX	EER	kWh	Class	SEER
COOLING	2 Unit	2000	2000				2000	2000				1250	4000	4500	300	1180	1330	1.7	5.4	6.1	3.39	229	A++	6.11
		2000	2500				1780	2500				1300	4000	4500	350	1180	1330	1.9	5.4	6.1	3.39	229	A++	6.11
		2000	3500				1450	3500				1300	4000	4500	350	1180	1330	1.9	5.4	6.1	3.39	229	A++	6.11
		2500	2500				2000	2500				1300	4000	4500	350	1180	1330	1.9	5.4	6.1	3.39	229	A++	6.11
		2500	3500				1670	3500				1300	4000	4500	350	1020	1330	1.9	4.7	6.1	3.92	229	A++	6.12

1. EER and COP declared only for the purpose of tax deductions in force at the time of the creation of this catalog.
2. The above is the value for connecting with the following indoor units.
   - AR**KSPDBWKNEU
3. You can not connect a single unit.
4. Power consumption include indoor unit power.

		Indoor Index					Heating Capacity (W)					Capacity W			Power Consumption W			Current A			Effic. NOM. Heating. At 7℃/20℃	Qhe	SEASONAL EFFICIENCY (ACCORDING EN14825)		
		A	B	C	D	E	A	B	C	D	E	MIN	NOM	MAX	MIN	NOM	MAX	MIN	NOM	MAX	COP	kWh	P design	Class	SCOP
HEATING	2 Unit	2000	2000				2200	2200				1000	4400	4700	280	1160	1390	1.4	5.3	6.4	3.79	1068	3.05	A+	4.00
		2000	2500				1760	2640				1000	4400	4700	280	1160	1400	1.4	5.3	6.4	3.79	1068	3.05	A+	4.00
		2000	3500				1560	2840				1000	4400	4700	280	1160	1400	1.4	5.3	6.4	3.79	1068	3.05	A+	4.00
		2500	2500				2200	2200				1000	4400	4700	280	1160	1400	1.4	5.3	6.4	3.79	1068	3.05	A+	4.00
		2500	3500				1990	2410				1000	4400	4700	280	990	1400	1.4	4.5	6.4	4.44	1095	3.05	A	3.90

1. EER and COP declared only for the purpose of tax deductions in force at the time of the creation of this catalog.
2. The above is the value for connecting with the following indoor units.
   - AR**KSPDBWKNEU
3. You can not connect a single unit.
4. Power consumption include indoor unit power.

2 Combination table

2-2. AJ050FCJ2EH/EU

COOLING		Indoor Index					Cooling Capacity (W)					Capacity W			Power Consumption W			Current A			Effic. NOM. Cooling. At 35℃/27℃	Qce	SEASONAL EFFICIENCY (ACCORDING EN14825)	
		A	B	C	D	E	A	B	C	D	E	MIN	NOM	MAX	MIN	NOM	MAX	MIN	NOM	MAX	EER	kWh	Class	SEER
	2 Unit	2000	2000				2000	2000				1300	4000	4800	350	1245	1490	1.9	5.7	6.8	3.21	231	A+	6.07
		2000	2500				2040	2560				1300	4600	5200	350	1430	1720	1.9	6.5	7.9	3.22	288	A+	6.08
		2000	3500				1820	3180				1400	5000	5400	350	1490	1780	1.9	6.8	8.1	3.36	287	A++	6.11
		2000	5000				1430	3570				1400	5000	5400	350	1450	1800	1.9	6.6	8.2	3.45	286	A++	6.13
		2500	2500				2500	2500				1400	5000	5400	350	1500	1780	1.9	6.9	8.1	3.33	278	A++	6.29
		2500	3500				2080	2920				1400	5000	5400	350	1500	1780	1.9	6.9	8.1	3.33	278	A++	6.29
		2500	5000				1670	3330				1400	5000	5400	350	1450	1700	2	6.6	7.8	3.45	281	A++	6.23
		3500	3500				2500	2500				1400	5000	5400	350	1500	1780	2	6.9	8.1	3.33	287	A++	6.1
		3500	5000				2060	2940				1400	5000	5400	350	1320	1700	2	6.0	7.8	3.79	278	A++	6.3

1. EER and COP declared only for the purpose of tax deductions in force at the time of the creation of this catalog.
2. The above is the value for connecting with the following indoor units.
   - AR**KSPDBWKNEU
3. You can not connect a single unit.
4. Power consumption include indoor unit power.

HEATING		Indoor Index					Heating Capacity (W)					Capacity W			Power Consumption W			Current A			Effic. NOM. Heating. At 7℃/20℃	Qhe	SEASONAL EFFICIENCY (ACCORDING EN14825)		
		A	B	C	D	E	A	B	C	D	E	MIN	NOM	MAX	MIN	NOM	MAX	MIN	NOM	MAX	COP	kWh	P design	Class	SCOP
	2 Unit	2000	2000				2200	2200				1100	4400	4750	280	1220	1390	1.4	5.6	6.4	3.61	1068	3.05	A+	4.00
		2000	2500				2040	3060				1100	5100	5460	280	1410	1610	1.4	6.5	7.4	3.62	1424	4.07	A+	4.00
		2000	3500				2020	3680				1100	5700	6300	280	1520	1900	1.4	7.0	8.7	3.75	1424	4.07	A+	4.00
		2000	5000				1530	4170				1100	5700	6400	280	1440	1800	1.4	6.6	8.2	3.96	1478	4.07	A	3.86
		2500	2500				2850	2850				1100	5700	6300	208	1550	1940	1.4	7.1	8.9	3.68	1470	4.21	A+	4.01
		2500	3500				2580	3120				1100	5700	6300	280	1550	1850	1.4	7.1	8.5	3.68	1470	4.21	A+	4.01
		2500	5000				2020	3680				1100	5700	6400	280	1440	1750	1.4	6.6	8.0	3.96	1478	4.07	A	3.86
		3500	3500				2850	2850				1100	5700	6300	280	1470	1840	1.4	6.7	8.4	3.88	1478	4.07	A	3.86
		3500	5000				2280	3420				1100	5700	6400	280	1350	1750	1.4	6.2	8.0	4.22	1478	4.07	A	3.86

1. EER and COP declared only for the purpose of tax deductions in force at the time of the creation of this catalog.
2. The above is the value for connecting with the following indoor units.
   - AR**KSPDBWKNEU
3. You can not connect a single unit.
4. Power consumption include indoor unit power.

2 Combination table

2-3. AJ052FCJ3EH/EU

		Indoor Index					Cooling Capacity (W)					Capacity			Power Consumption			Current			Effic. NOM. Cooling. At 35℃/27℃	Qce	SEASONAL EFFICIENCY (ACCORDING EN14825)	
		A	B	C	D	E	A	B	C	D	E	W			W			A						
												MIN	NOM	MAX	MIN	NOM	MAX	MIN	NOM	MAX	EER	kWh	Class	SEER
COOLING	2 Unit	2000	2000				2000	2000				1300	4000	4800	440	1240	1630	2.3	5.7	7.5	3.23	230	A+	6.08
		2000	2500				2040	2560				1300	4600	5520	440	1410	1850	2.3	6.5	8.5	3.26	266	A+	6.06
		2000	3500				1820	3180				1300	5000	6290	450	1520	2000	2.3	7.0	9.2	3.29	286	A++	6.13
		2000	5000				1490	3710				1380	5200	6600	450	1540	2040	2.3	7.0	9.3	3.38	306	A+	5.94
		2500	2500				2500	2500				1300	5000	5800	440	1550	1980	2.3	7.1	9.1	3.23	286	A++	6.11
		2500	3500				2080	2920				1300	5000	6400	450	1510	2020	2.3	6.9	9.2	3.31	285	A++	6.13
		2500	5000				1730	3470				1380	5200	6800	450	1540	2070	2	7.0	9.5	3.38	306	A+	5.94
		3500	3500				2600	2600				1300	5200	6560	450	1540	2040	2	7.0	9.3	3.38	306	A+	5.94
	3 Unit	2000	2000	2000			1730	1730	1740			1700	5200	6380	450	1500	2020	2.3	6.9	9.2	3.47	315	A+	5.78
		2000	2000	2500			1600	1600	2000			1700	5200	6490	450	1530	2040	2.3	7.0	9.3	3.40	315	A+	5.77
		2000	2000	3500			1390	1390	2420			1700	5200	6800	460	1420	2070	2.4	6.5	9.5	3.66	313	A+	5.81
		2000	2500	2500			1480	1860	1860			1700	5200	6600	450	1390	2040	2.3	6.4	9.3	3.74	312	A+	5.84
		2000	2500	3500			1300	1630	2270			1700	5200	6800	460	1420	2070	2.4	6.5	9.5	3.66	313	A+	5.81
		2500	2500	2500			1730	1730	1740			1700	5200	6800	460	1350	2070	2.4	6.2	9.5	3.85	312	A+	5.84
		2500	2500	3500			1530	1530	2140			1700	5200	6800	460	1350	2070	2	6.2	9.5	3.77	298	A++	6.1

1. EER and COP declared only for the purpose of tax deductions in force at the time of the creation of this catalog.
2. The above is the value for connecting with the following indoor units.
   - AR**KSPDBWKNEU
3. You can not connect a single unit.
4. Power consumption include indoor unit power.

		Indoor Index					Heating Capacity (W)					Capacity			Power Consumption			Current			Effic. NOM. Heating. At 7℃/20℃	Qhe	SEASONAL EFFICIENCY (ACCORDING EN14825)		
		A	B	C	D	E	A	B	C	D	E	W			W			A							
												MIN	NOM	MAX	MIN	NOM	MAX	MIN	NOM	MAX	COP	kWh	P design	Class	SCOP
HEATING	2 Unit	2000	2000				2200	2200				1400	4400	5060	350	1220	1510	1.9	5.6	6.9	3.61	1068	3.05	A+	4.00
		2000	2500				2040	3060				1400	5100	5870	350	1410	1830	1.9	6.5	8.4	3.62	1489	4.21	A	3.95
		2000	3500				1990	3610				1400	5600	6440	350	1540	1860	1.9	7.0	8.5	3.64	1741	4.91	A	3.94
		2000	5000				1610	4390				1400	6000	6900	350	1660	1860	1.9	7.6	8.5	3.61	1747	4.91	A	3.93
		2500	2500				2900	2900				1400	5800	6300	350	1600	1910	1.9	7.3	8.7	3.63	1715	4.91	A+	4.00
		2500	3500				2620	3180				1400	5800	6300	350	1600	1910	1.9	7.3	8.7	3.63	1741	4.91	A	3.94
		2500	5000				2240	4060				1400	6300	7300	350	1740	1830	2	8.0	8.4	3.62	1747	4.91	A	3.93
		3500	3500				2950	2950				1400	5900	6880	350	1630	1860	2	7.5	8.5	3.62	1747	4.91	A	3.93
	3 Unit	2000	2000	2000			1930	1930	1940			1400	5800	6760	350	1590	1840	1.9	7.3	8.4	3.65	1761	4.91	A	3.90
		2000	2000	2500			1690	1690	2520			1400	5900	6840	350	1650	1840	1.9	7.6	8.4	3.58	1761	4.91	A	3.90
		2000	2000	3500			1650	1650	3000			1400	6300	7300	350	1660	1830	1.9	7.6	8.4	3.80	1761	4.91	A	3.90
		2000	2500	2500			1500	2250	2250			1400	6000	6920	350	1590	1840	1.9	7.3	8.4	3.77	1761	4.91	A	3.90
		2000	2500	3500			1460	2190	2650			1400	6300	7300	350	1630	1830	1.9	7.5	8.4	3.87	1761	4.91	A	3.90
		2500	2500	2500			2100	2100	2100			1400	6300	7300	350	1400	1830	1.9	6.4	8.4	4.5	1761	4.91	A	3.90
		2500	2500	3500			1850	1850	2600			1400	6300	7300	350	1400	1830	2	6.4	8.4	4.5	1765	4.91	A	3.90

1. EER and COP declared only for the purpose of tax deductions in force at the time of the creation of this catalog.
2. The above is the value for connecting with the following indoor units.
   - AR**KSPDBWKNEU
3. You can not connect a single unit.
4. Power consumption include indoor unit power.

2 Combination table

2-4. AJ068FCJ3EH/EU

COOLING

	Indoor Index					Cooling Capacity (W)					Capacity W			Power Consumption W			Current A			Effic. NOM. Cooling. At 35℃/27℃	Qce	SEASONAL EFFICIENCY (ACCORDING EN14825)	
	A	B	C	D	E	A	B	C	D	E	MIN	NOM	MAX	MIN	NOM	MAX	MIN	NOM	MAX	EER	kWh	Class	SEER
2 Unit	2000	2000				2000	2000				1300	4000	4800	420	1240	1480	2.3	5.7	6.8	3.23	235	A+	5.96
	2000	2500				2000	2500				1300	4500	5520	420	1410	1680	2.3	6.5	7.7	3.19	268	A+	5.88
	2000	3500				2000	3500				1300	5500	6550	420	1830	2470	2.3	8.4	11.3	3.01	340	A+	5.66
	2000	5000				1860	4640				1300	6500	7740	420	2000	2690	2.3	9.2	12.3	3.25	377	A+	6.04
	2500	2500				2500	2500				1300	5000	5950	420	1660	2260	2.3	7.6	10.3	3.01	294	A+	5.95
	2500	3500				2500	3500				1300	6000	7140	420	1980	2670	2.3	9.1	12.2	3.03	356	A+	5.9
	2500	5000				2270	4530				1380	6800	8090	430	2090	2660	2	9.6	12.2	3.25	395	A+	6.02
	3500	3500				3250	3250				1300	6500	7740	420	2010	2700	2	9.2	12.4	3.23	378	A+	6.02
	3500	5000				2800	4000				1380	6800	8090	430	2100	2670	2	9.6	12.2	3.24	395	A+	6.02
	5000	5000				3400	3400				1380	6800	8090	430	2060	2660	2	9.4	12.2	3.3	393	A+	6.06
3 Unit	2000	2000	2000			2000	2000	2000			1800	6000	7400	440	1970	2650	2.3	9.0	12.1	3.05	350	A+	6.00
	2000	2000	2500			2000	2000	2500			1800	6500	8000	440	2000	2690	2.3	9.2	12.3	3.25	372	A++	6.11
	2000	2000	3500			1810	1810	3180			1800	6800	8400	440	2070	2700	2.3	9.5	12.4	3.29	392	A+	6.07
	2000	2000	5000			1510	1510	3780			1800	6800	8400	440	2000	2690	2.3	9.2	12.3	3.40	391	A+	6.09
	2000	2500	2500			1860	2320	2320			1800	6500	8000	440	2030	2690	2.3	9.3	12.3	3.20	373	A++	6.10
	2000	2500	3500			1700	2130	2970			1800	6800	8400	440	2090	2690	2.3	9.6	12.3	3.25	393	A+	6.06
	2000	2500	5000			1430	1790	3580			1800	6800	8400	440	2010	2690	2.3	9.2	12.3	3.38	391	A+	6.08
	2000	3500	3500			1520	2640	2640			1800	6800	8400	440	2010	2700	2.3	9.2	12.4	3.38	391	A+	6.08
	2000	3500	5000			1300	2270	3230			1800	6800	8400	440	2050	2700	2.3	9.4	12.4	3.32	392	A+	6.07
	2500	2500	2500			2260	2270	2270			1800	6800	8400	440	2060	2690	2.3	9.4	12.3	3.3	392	A+	6.07
	2500	2500	3500			2000	2000	2800			1800	6800	8400	440	2130	2700	2.3	9.7	12.4	3.19	394	A+	6.05
	2500	2500	5000			1700	1700	3400			1800	6800	8400	440	2030	2690	2.3	9.3	12.3	3.35	392	A+	6.08
	2500	3500	3500			1780	2510	2510			1800	6800	8400	440	2020	2700	2.3	9.2	12.4	3.37	391	A+	6.08
	2500	3500	5000			1550	2160	3090			1800	6800	8400	440	2070	2700	2.3	9.5	12.4	3.29	392	A+	6.07
	3500	3500	3500			2260	2270	2270			1800	6800	8400	440	2000	2710	2	9.2	12.4	3.4	391	A+	6.09

1. EER and COP declared only for the purpose of tax deductions in force at the time of the creation of this catalog.
2. The above is the value for connecting with the following indoor units.
   - AR**KSPDBWKNEU
3. You can not connect a single unit.
4. Power consumption include indoor unit power.

HEATING

	Indoor Index					Heating Capacity (W)					Capacity W			Power Consumption W			Current A			Effic. NOM. Heating. At 7℃/20℃	Qhe	SEASONAL EFFICIENCY (ACCORDING EN14825)		
	A	B	C	D	E	A	B	C	D	E	MIN	NOM	MAX	MIN	NOM	MAX	MIN	NOM	MAX	COP	kWh	P design	Class	SCOP
2 Unit	2000	2000				2200	2200				1400	4400	5060	380	1220	1600	1.9	5.6	7.3	3.61	1068	3.05	A+	4.00
	2000	2500				2200	3300				1400	5500	6330	380	1490	2000	1.9	6.8	9.2	3.69	1489	4.21	A	3.95
	2000	3500				2200	4000				1400	6200	7130	380	1670	2300	1.9	7.6	10.5	3.71	1736	4.91	A	3.96
	2000	5000				2090	5710				1400	7800	8970	380	1990	2700	1.9	9.1	12.4	3.92	1969	5.65	A+	4.02
	2500	2500				3300	3300				1400	6600	7590	380	1890	2600	1.9	8.6	11.9	3.49	1715	4.91	A+	4.00
	2500	3500				3300	4000				1400	7300	8400	380	1950	2600	1.9	8.9	11.9	3.74	1801	5.09	A	3.95
	2500	5000				2770	5030				1400	7800	8970	380	2040	2800	2	9.3	12.8	3.82	1779	5.09	A+	4.00
	3500	3500				3900	3900				1400	7800	8970	380	1990	2700	2	9.1	12.4	3.92	1779	5.09	A+	4.00
	3500	5000				3200	4800				1400	8000	9200	380	2090	2800	2	9.6	12.8	3.83	1779	5.65	A+	4.00
	5000	5000				4000	4000				1400	8000	9200	380	2080	2800	2	9.5	12.8	3.85	1971	5.65	A+	4.02
3 Unit	2000	2000	2000			2200	2200	2200			1400	6600	8100	380	1760	2400	1.9	8.1	11.0	3.75	2012	5.65	A	3.93
	2000	2000	2500			2200	2200	3300			1400	7700	9500	380	1830	2500	1.9	8.4	11.4	4.21	2012	5.65	A	3.93
	2000	2000	3500			2100	2100	3800			1400	8000	9800	380	1920	2600	1.9	8.8	11.9	4.17	2002	5.65	A	3.95
	2000	2000	5000			1690	1690	4620			1400	8000	9800	380	1960	2600	1.9	9.0	11.9	4.08	2002	5.65	A	3.95
	2000	2500	2500			2000	3000	3000			1400	8000	9800	380	1880	2500	1.9	8.6	11.4	4.26	1976	5.65	A+	4.00
	2000	2500	3500			1850	2780	3370			1400	8000	9800	380	1910	2600	1.9	8.7	11.9	4.19	2002	5.65	A	3.95
	2000	2500	5000			1530	2300	4170			1400	8000	9800	380	1920	2600	1.9	8.8	11.9	4.17	2002	5.65	A	3.95
	2000	3500	3500			1720	3140	3140			1400	8000	9800	380	1960	2600	1.9	9	11.9	4.08	2002	5.65	A	3.95
	2000	3500	5000			1450	2620	3930			1400	8000	9800	380	1950	2600	1.9	8.9	11.9	4.1	2002	5.65	A	3.95
	2500	2500	2500			2660	2670	2670			1400	8000	9800	380	1930	2600	1.9	8.8	11.9	4.15	2002	5.65	A	3.95
	2500	2500	3500			2490	2490	3020			1400	8000	9800	380	1910	2600	1.9	8.7	11.9	4.19	1978	5.65	A+	4.00
	2500	2500	5000			2100	2100	3800			1400	8000	9800	380	1950	2600	1.9	8.9	11.9	4.1	1978	5.65	A+	4.00
	2500	3500	3500			2340	2830	2830			1400	8000	9800	380	1930	2600	1.9	8.8	11.9	4.15	2002	5.65	A	3.95
	2500	3500	5000			1980	2410	3610			1400	8000	9800	380	1980	2700	1.9	9.1	12.4	4.04	2002	5.65	A	3.95
	3500	3500	3500			2660	2670	2670			1400	8000	9800	380	1910	2600	2	8.7	11.9	4.19	1978	5.65	A+	4.00

1. EER and COP declared only for the purpose of tax deductions in force at the time of the creation of this catalog.
2. The above is the value for connecting with the following indoor units.
   - AR**KSPDBWKNEU
3. You can not connect a single unit.
4. Power consumption include indoor unit power.

2 Combination table

2-5. AJ070FCJ4EH/EU

		Indoor Index					Cooling Capacity (W)					Capacity W			Power Consumption W			Current A			Effic. NOM. Cooling. At 35℃/27℃	Qce	SEASONAL EFFICIENCY (ACCORDING EN14825)	
		A	B	C	D	E	A	B	C	D	E	MIN	NOM	MAX	MIN	NOM	MAX	MIN	NOM	MAX	EER	kWh	Class	SEER
COOLING	2 Unit	2000	2000				2000	2000				1500	4000	4800	410	1240	1490	1.9	5.7	6.8	3.23	239	A+	5.86
		2000	2500				2040	2560				1690	4600	5520	420	1430	1720	1.9	6.5	7.9	3.22	275	A+	5.86
		2000	3500				2000	3500				1770	5500	6600	430	1710	2050	2	7.8	9.4	3.22	342	A+	5.63
		2000	5000				2000	5000				1900	7000	8400	580	2180	2520	2.7	10.0	11.5	3.21	455	A	5.42
		2500	2500				2600	2600				1750	5200	6240	420	1660	2000	1.9	7.6	9.2	3.13	307	A+	5.92
		2500	3500				2540	3560				1820	6100	7320	440	1880	2260	2	8.6	10.3	3.24	368	A+	5.8
		2500	5000				2330	4670				1900	7000	8400	580	2180	2540	3	10.0	11.6	3.21	451	A	5.41
		3500	3500				3500	3500				1900	7000	8000	580	2490	2620	3	11.4	12	2.81	462	A	5.3
		3500	5000				2880	4120				1900	7000	8900	580	2110	2540	3	9.7	11.6	3.32	452	A	5.48
		5000	5000				3500	3500				1900	7000	8900	580	2000	2540	3	9.2	11.6	3.5	451	A	5.43
	3 Unit	2000	2000	2000			2000	2000	2000			1810	6000	7200	440	1800	2280	2	8.2	10.4	3.33	387	A	5.43
		2000	2000	2500			2030	2030	2540			1870	6600	7920	440	1830	2460	2	8.4	11.3	3.61	413	A	5.59
		2000	2000	3500			1780	1780	3120			1900	6680	8020	580	1835	2410	2.7	8.4	11.0	3.64	441	A	5.31
		2000	2000	5000			1560	1560	3880			1900	7000	8900	580	1850	2460	2.7	8.5	11.3	3.78	436	A+	5.62
		2000	2500	2500			1910	2370	2370			1900	6650	7980	580	1830	2410	2.7	8.4	11.0	3.63	415	A+	5.60
		2000	2500	3500			1690	2110	2940			1900	6740	8080	580	1840	2460	2.7	8.4	11.3	3.66	444	A	5.32
		2000	2500	5000			1480	1840	3680			1900	7000	8900	580	1880	2460	2.7	8.6	11.3	3.72	437	A+	5.61
		2000	3500	3500			1520	2650	2650			1900	6820	8180	580	1850	2510	2.7	8.5	11.5	3.69	428	A	5.58
		2000	3500	5000			1340	2330	3330			1900	7000	8900	580	1930	2510	2.7	8.8	11.5	3.63	438	A	5.59
		2500	2500	2500			2240	2240	2240			1900	6720	8050	580	1840	2420	2.7	8.4	11.1	3.65	443	A	5.31
		2500	2500	3500			2000	2000	2790			1900	6790	8150	580	1850	2460	2.7	8.5	11.3	3.67	446	A	5.32
		2500	2500	5000			1750	1750	3500			1900	7000	8900	580	1880	2510	2.7	8.6	11.5	3.72	437	A+	5.61
		2500	3500	3500			1840	2580	2580			1900	7000	8900	580	1880	2460	2.7	8.6	11.3	3.72	437	A+	5.61
		3500	3500	3500			2330	2330	2330			1900	6990	8900	580	1900	2510	2.7	8.7	11.5	3.68	437	A+	5.6
	4 Unit	2000	2000	2000	2000		1680	1680	1680	1680		1900	6720	8070	580	1850	2460	3	8.5	11.3	3.63	423	A	5.56
		2000	2000	2000	2500		1600	1600	1600	1980		1900	6780	8140	580	1880	2460	3	8.6	11.3	3.61	427	A	5.56
		2000	2000	2000	3500		1470	1470	1470	2590		1900	7000	8900	580	1900	2460	3	8.7	11.3	3.68	437	A+	5.6
		2000	2000	2500	2500		1560	1560	1940	1940		1900	7000	8900	580	1880	2460	3	8.6	11.3	3.72	437	A+	5.61
		2000	2000	2500	3500		1400	1400	1750	2450		1900	7000	8900	580	1900	2510	3	8.7	11.5	3.68	437	A+	5.6
		2000	2500	2500	2500		1480	1840	1840	1840		1900	7000	8900	580	1900	2460	3	8.7	11.3	3.68	437	A+	5.6
		2000	2500	2500	3500		1330	1670	1670	2330		1900	7000	8900	580	1930	2550	3	8.8	11.7	3.63	438	A	5.59
		2500	2500	2500	2500		1750	1750	1750	1750		1900	7000	8900	580	1900	2550	3	8.7	11.7	3.68	437	A+	5.6

1. EER and COP declared only for the purpose of tax deductions in force at the time of the creation of this catalog.
2. The above is the value for connecting with the following indoor units.
   - AR**KSPDBWKNEU
3. You can not connect a single unit.
4. Power consumption include indoor unit power.

		Indoor Index					Heating Capacity (W)					Capacity W			Power Consumption W			Current A			Effic. NOM. Heating. At 7℃/20℃	Qhe	SEASONAL EFFICIENCY (ACCORDING EN14825)		
		A	B	C	D	E	A	B	C	D	E	MIN	NOM	MAX	MIN	NOM	MAX	MIN	NOM	MAX	COP	kWh	P design	Class	SCOP
HEATING	2 Unit	2000	2000				2200	2200				1980	4400	5060	600	1220	1530	2.7	5.6	7.0	3.61	1068	3.05	A+	4.00
		2000	2500				2040	3060				2040	5100	5870	610	1410	1700	2.8	6.5	7.8	3.62	1489	4.21	A	3.95
		2000	3500				2130	3870				2110	6000	6900	610	1760	2110	2.8	8.1	9.7	3.41	1736	4.91	A	3.96
		2000	5000				2090	5710				2200	7800	9130	620	2160	2700	2.8	9.9	12.4	3.61	1874	5.09	A	3.80
		2500	2500				2900	2900				2100	5800	6670	610	1600	1930	2.8	7.3	8.8	3.63	1715	4.91	A+	4.00
		2500	3500				3030	3670				2170	6700	8040	610	1940	2330	2.8	8.9	10.7	3.45	1736	4.91	A	3.96
		2500	5000				2770	5030				2200	7800	9600	620	2160	2650	3	9.9	12.1	3.61	1875	5.09	A	3.8
		3500	3500				3800	3800				2200	7600	9120	620	2180	2510	3	10.0	11.5	3.49	2164	5.88	A	3.8
		3500	5000				3250	4870				2200	8120	9740	620	2250	2700	3	10.3	12.4	3.61	1876	5.09	A	3.8
		5000	5000				4250	4250				2200	8500	10200	620	2250	2740	3	10.3	12.5	3.78	2164	5.88	A	3.8
	3 Unit	2000	2000	2000			2200	2200	2200			2170	6600	7590	610	1830	2530	2.8	8.4	11.6	3.61	2012	5.65	A	3.93
		2000	2000	2500			2090	2090	3120			2200	7300	8400	620	1880	2590	2.8	8.6	11.9	3.88	2164	5.88	A	3.80
		2000	2000	3500			2150	2150	3900			2200	8200	9590	620	1930	2660	2.8	8.8	12.2	4.25	2164	5.88	A	3.80
		2000	2000	5000			1820	1820	4960			2200	8600	10300	620	1960	2700	2.8	9.0	12.4	4.39	2164	5.88	A	3.80
		2000	2500	2500			2000	3000	3000			2200	8000	9360	620	1900	2620	2.8	8.7	12.0	4.21	2164	5.88	A	3.80
		2000	2500	3500			1910	2870	3480			2200	8260	9670	620	1930	2660	2.8	8.8	12.2	4.28	2164	5.88	A	3.8
		2000	2500	5000			1650	2470	4480			2200	8600	10300	620	1970	2720	2.8	9	12.4	4.37	2164	5.88	A	3.8
		2000	3500	3500			1800	3270	3270			2200	8340	9760	620	1950	2690	2.8	8.9	12.3	4.28	2164	5.88	A	3.8
		2000	3500	5000			1550	2820	4230			2200	8600	10300	620	2000	2760	2.8	9.2	12.6	4.3	2164	5.88	A	3.8
		2500	2500	2500			2750	2750	2750			2200	8250	9650	620	1930	2660	2.8	8.8	12.2	4.27	2164	5.88	A	3.8
		2500	2500	3500			2600	2600	3130			2200	8330	9740	620	1950	2690	2.8	8.9	12.3	4.27	2164	5.88	A	3.8
		2500	2500	5000			2250	2250	4100			2200	8600	10300	620	1980	2730	2.8	9.1	12.5	4.34	2164	5.88	A	3.8
		2500	3500	3500			2520	3040	3040			2200	8600	10300	620	1980	2730	2.8	9.1	12.5	4.34	2164	5.88	A	3.8
		3500	3500	3500			2860	2870	2870			2200	8600	10300	620	2000	2760	2.8	9.2	12.6	4.3	2164	5.88	A	3.8
	4 Unit	2000	2000	2000	2000		2060	2060	2060	2070		2200	8250	9660	620	1930	2660	3	8.8	12.2	4.27	2148	5.88	A	3.83
		2000	2000	2000	2500		1850	1850	1850	2770		2200	8320	9730	620	1950	2690	3	8.9	12.3	4.27	2148	5.88	A	3.83
		2000	2000	2000	3500		1790	1790	1790	3230		2200	8600	10300	620	2000	2760	3	9.2	12.6	4.3	2148	5.88	A	3.83
		2000	2000	2500	2500		1720	1720	2580	2580		2200	8600	10300	620	1970	2720	3	9.0	12.4	4.37	2148	5.88	A	3.83
		2000	2000	2500	3500		1620	1620	2430	2930		2200	8600	10300	620	2000	2760	3	9.2	12.6	4.3	2148	5.88	A	3.83
		2000	2500	2500	2500		1550	2350	2350	2350		2200	8600	10300	620	2000	2760	3	9.2	12.6	4.3	2148	5.88	A	3.83
		2000	2500	2500	3500		1480	2220	2220	2680		2200	8600	10300	620	2000	2760	3	9.2	12.6	4.3	2148	5.88	A	3.83
		2500	2500	2500	2500		2150	2150	2150	2150		2200	8600	10300	620	2000	2760	3	9.2	12.6	4.3	2148	5.88	A	3.83

1. EER and COP declared only for the purpose of tax deductions in force at the time of the creation of this catalog.
2. The above is the value for connecting with the following indoor units.
   - AR**KSPDBWKNEU
3. You can not connect a single unit.
4. Power consumption include indoor unit power.

2 Combination table

2-6. AJ080FCJ4EH/EU

		Indoor Index					Cooling Capacity (W)					Capacity W			Power Consumption W			Current A			Effic. NOM. Cooling. At 35℃/27℃	Qce	SEASONAL EFFICIENCY (ACCORDING EN14825)	
		A	B	C	D	E	A	B	C	D	E	MIN	NOM	MAX	MIN	NOM	MAX	MIN	NOM	MAX	EER	kWh	Class	SEER
COOLING	2 Unit	2000	2000				2000	2000				1640	4000	4800	410	1240	1490	1.9	5.7	6.8	3.23	239	A+	5.86
		2000	2500				2040	2560				1690	4600	5520	420	1430	1720	1.9	6.5	7.9	3.22	275	A+	5.86
		2000	3500				2000	3500				1770	5500	6600	430	1710	2050	2	7.8	9.4	3.22	342	A+	5.63
		2000	5000				2060	5140				1900	7200	8640	580	2240	2690	2.7	10.3	12.3	3.21	466	A	5.40
		2000	6800				1690	5760				1900	7450	8640	580	2350	2730	2.7	10.8	12.5	3.17	496	A	5.25
		2500	2500				2600	2600				1750	5200	6240	420	1660	2000	1.9	7.6	9.2	3.13	307	A+	5.92
		2500	3500				2540	3560				1820	6100	7320	440	1900	2260	2	8.7	10.3	3.21	369	A+	5.79
		2500	5000				2400	4800				1900	7200	8640	580	2240	2690	3	10.3	12.3	3.21	466	A	5.4
		2500	6800				2030	5520				1900	7550	8760	580	2380	2760	3	10.9	12.6	3.17	502	A	5.26
		3500	3500				3500	3500				1900	7000	8000	580	2490	2620	3	11.4	12	2.81	462	A	5.3
		3500	5000				3030	4320				1900	7350	8820	580	2290	2750	3	10.5	12.6	3.21	475	A	5.42
		3500	6800				2620	5080				1900	7700	8930	580	2400	2780	3	11.0	12.7	3.21	515	A	5.28
		5000	5000				3830	3830				1900	7660	9180	580	2380	2860	3	10.9	13.1	3.22	513	A	5.22
		5000	6800				3310	4490				1900	7800	8970	580	2430	2820	3	11.1	12.9	3.21	522	A	5.23
	3 Unit	2000	2000	2000			2000	2000	2000			1810	6000	7200	440	1850	2310	2	8.5	10.6	3.24	392	A	5.36
		2000	2000	2500			2030	2030	2540			1870	6600	7920	440	2000	2500	2	9.2	11.4	3.30	417	A	5.54
		2000	2000	3500			1920	1920	3360			1900	7200	9000	580	2290	2780	2.7	10.5	12.7	3.14	478	A	5.27
		2000	2000	5000			1680	1680	4190			1900	7550	9180	580	2260	2730	2.7	10.3	12.5	3.34	495	A	5.34
		2000	2000	6800			1480	1480	5040			1900	8000	9300	580	2340	2870	2.7	10.7	13.1	3.42	519	A	5.39
		2000	2500	2500			2000	2500	2500			1900	7000	8640	580	2220	2680	2.7	10.2	12.3	3.15	470	A	5.21
		2000	2500	3500			1830	2280	3200			1900	7310	9060	580	2220	2690	2.7	10.2	12.3	3.29	482	A	5.31
		2000	2500	5000			1610	2010	4030			1900	7650	9250	580	2260	2730	2.7	10.3	12.5	3.38	500	A	5.36
		2000	2500	6800			1420	1770	4810			1900	8000	9300	580	2340	2870	2.7	10.7	13.1	3.42	519	A	5.39
		2000	3500	3500			1680	2930	2930			1900	7540	9160	580	2260	2730	2.7	10.3	12.5	3.34	494	A	5.34
		2000	3500	5000			1500	2630	3750			1900	7880	9300	580	2330	2820	2.7	10.7	12.9	3.38	513	A	5.37
		2000	5000	5000			1330	3330	3330			1900	8000	9300	580	2370	2910	2.7	10.8	13.3	3.38	520	A	5.39
		2500	2500	2500			2400	2400	2400			1900	7200	9030	580	2180	2640	2.7	10	12.1	3.3	475	A	5.3
		2500	2500	3500			2180	2180	3060			1900	7420	9130	580	2210	2690	2.7	10.1	12.3	3.36	487	A	5.33
		2500	2500	5000			1940	1940	3890			1900	7770	9300	580	2280	2780	2.7	10.4	12.7	3.41	507	A	5.37
		2500	2500	6800			1690	1690	4610			1900	8000	9300	580	2370	2910	2.7	10.8	13.3	3.38	520	A	5.39
		2500	3500	3500			2010	2820	2820			1900	7650	9230	580	2250	2730	2.7	10.3	12.5	3.4	499	A	5.36
		2500	3500	5000			1820	2550	3640			1900	8000	9300	580	2330	2870	2.7	10.7	13.1	3.43	519	A	5.39
		3500	3500	3500			2630	2630	2630			1900	7890	9300	580	2330	2820	2.7	10.7	12.9	3.39	514	A	5.38
		3500	3500	5000			2330	2330	3330			1900	8000	9300	580	2370	2910	2.7	10.8	13.3	3.38	420	A	5.39
	4 Unit	2000	2000	2000	2000		1830	1830	1830	1830		1900	7320	9050	580	2210	2690	3	10.1	12.3	3.31	521	A	5.26
		2000	2000	2000	2500		1750	1750	1750	2190		1900	7440	9120	580	2210	2690	3	10.1	12.3	3.37	520	A	5.28
		2000	2000	2000	3500		1610	1610	1610	2820		1900	7650	9220	580	2250	2730	3	10.3	12.5	3.4	520	A	5.36
		2000	2000	2000	5000		1450	1450	1450	3650		1900	8000	9300	580	2300	2870	3	10.5	13.1	3.48	518	A	5.4
		2000	2000	2500	2500		1680	1680	2090	2090		1900	7540	9180	580	2260	2730	3	10.3	12.5	3.34	520	A	5.33
		2000	2000	2500	3500		1550	1550	1940	2720		1900	7760	9280	580	2270	2780	3	10.4	12.7	3.42	519	A	5.37
		2000	2000	2500	5000		1390	1390	1740	3480		1900	8000	9300	580	2300	2870	3	10.5	13.1	3.48	518	A	5.4
		2000	2000	3500	3500		1450	1450	2550	2550		1900	8000	9300	580	2350	2870	3	10.8	13.1	3.4	518	A	5.39
		2000	2500	2500	2500		1610	2010	2010	2010		1900	7650	9250	580	2260	2730	3	10.3	12.5	3.38	520	A	5.35
		2000	2500	2500	3500		1500	1880	1880	2630		1900	7890	9300	580	2330	2820	3	10.7	12.9	3.39	520	A	5.38
		2000	2500	2500	5000		1330	1670	1670	3330		1900	8000	9300	580	2300	2910	3	10.5	13.3	3.48	518	A	5.4
		2000	2500	3500	3500		1400	1740	2430	2430		1900	8000	9300	580	2300	2870	3	10.5	13.1	3.48	518	A	5.4
		2500	2500	2500	2500		1940	1940	1940	1940		1900	7760	9300	580	2290	2780	3	10.5	12.7	3.39	520	A	5.36
		2500	2500	2500	3500		1820	1820	1820	2540		1900	8000	9300	580	2300	2870	3	10.5	13.1	3.48	518	A	5.4
		2500	2500	3500	3500		1670	1670	2330	2330		1900	8000	9300	580	2300	2910	3	10.5	13.3	3.48	518	A	5.4

1. EER and COP declared only for the purpose of tax deductions in force at the time of the creation of this catalog.
2. The above is the value for connecting with the following indoor units.
   - AR**KSPDBWKNEU
3. You can not connect a single unit.
4. Power consumption include indoor unit power.

HEATING

	Indoor Index					Heating Capacity (W)					Capacity W			Power Consumption W			Current A			Effic. NOM. Heating. At 7°C/20°C	Qhe	SEASONAL EFFICIENCY (ACCORDING EN14825)		
	A	B	C	D	E	A	B	C	D	E	MIN	NOM	MAX	MIN	NOM	MAX	MIN	NOM	MAX	COP	kWh	P design	Class	SCOP
2 Unit	2000	2000				2200	2200				1980	4400	5060	600	1220	1530	2.7	5.6	7.0	3.61	1068	3.05	A+	4.00
	2000	2500				2040	3060				2040	5100	5870	610	1410	1700	2.8	6.5	7.8	3.62	1489	4.21	A	3.95
	2000	3500				2130	3870				2110	6000	6900	610	1760	2110	2.8	8.1	9.7	3.41	1736	4.91	A	3.96
	2000	5000				2090	5710				2200	7800	9130	620	2160	2580	2.8	9.9	11.8	3.61	1874	5.09	A	3.80
	2000	6800				1790	6330				2200	8120	9300	620	2250	2600	2.8	10.3	11.9	3.61	1868	5.09	A	3.81
	2500	2500				2900	2900				2100	5800	6670	610	1600	1930	2.8	7.3	8.8	3.63	1715	4.91	A+	4
	2500	3500				3030	3670				2170	6700	7710	610	1940	2330	3	8.9	10.7	3.45	1736	4.91	A	3.96
	2500	5000				2770	5030				2200	7800	9360	620	2160	2600	3	9.9	11.9	3.61	1875	5.09	A	3.8
	2500	6800				2480	5870				2200	8350	9600	620	2340	2700	3	10.7	12.4	3.57	1868	5.09	A	3.81
	3500	3500				3800	3800				2200	7600	8740	620	2180	2510	3	10.0	11.5	3.49	2164	5.88	A	3.8
	3500	5000				3250	4870				2200	8120	9500	620	2250	2650	3	10.3	12.1	3.61	1876	5.09	A	3.8
	3500	6800				2860	5590				2200	8450	9700	620	2380	2700	3	10.9	12.4	3.55	1869	5.09	A	3.81
	5000	5000				4250	4250				2200	8500	9950	620	2340	2750	3	10.7	12.6	3.63	2164	5.88	A	3.8
	5000	6800				3760	4890				2200	8650	9900	620	2420	2800	3	11.1	12.8	3.57	2164	5.88	A	3.8
3 Unit	2000	2000	2000			2200	2200	2200			2170	6600	7590	610	1830	2220	2.8	8.4	10.2	3.61	2012	5.65	A	3.93
	2000	2000	2500			2090	2090	3120			2200	7300	8400	620	1950	2340	2.8	8.9	10.7	3.74	2164	5.88	A	3.80
	2000	2000	3500			2150	2150	3900			2200	8200	9590	620	2150	2570	2.8	9.8	11.8	3.81	2164	5.88	A	3.80
	2000	2000	5000			1820	1820	4980			2200	8620	10090	620	2140	2610	2.8	9.8	11.9	4.03	2164	5.88	A	3.80
	2000	2000	6800			1580	1580	5590			2200	8750	10500	620	2150	2750	2.8	9.8	12.6	4.07	2158	5.88	A	3.81
	2000	2500	2500			2000	3000	3000			2200	8000	9360	620	2080	2500	2.8	9.5	11.4	3.85	2164	5.88	A	3.8
	2000	2500	3500			1980	2960	3590			2200	8530	9980	620	2100	2690	2.8	9.6	12.3	4.06	2164	5.88	A	3.8
	2000	2500	5000			1660	2490	4530			2200	8680	10150	620	2140	2740	2.8	9.8	12.5	4.06	2164	5.88	A	3.8
	2000	2500	6800			1540	2310	5450			2200	9300	10900	620	2250	2820	2.8	10.3	12.9	4.13	2158	5.88	A	3.81
	2000	3500	3500			1860	3370	3370			2200	8600	10070	620	2140	2740	2.8	9.8	12.5	4.02	2164	5.88	A	3.8
	2000	3500	5000			1580	2870	4300			2200	8750	10500	620	2150	2750	2.8	9.8	12.6	4.07	2158	5.88	A	3.81
	2000	5000	5000			1440	3930	3930			2200	9300	10900	620	2250	2820	2.8	10.3	12.9	4.13	2158	5.88	A	3.81
	2500	2500	2500			2840	2840	2840			2200	8520	9960	620	2090	2680	2.8	9.6	12.3	4.08	2164	5.88	A	3.8
	2500	2500	3500			2670	2670	3250			2200	8590	10050	620	2100	2690	2.8	9.6	12.3	4.09	2164	5.88	A	3.8
	2500	2500	5000			2290	2290	4170			2200	8750	10500	620	2140	2740	2.8	9.8	12.5	4.09	2158	5.88	A	3.81
	2500	2500	6800			2130	2130	5040			2200	9300	10900	620	2250	2820	2.8	10.3	12.9	4.13	2158	5.88	A	3.81
	2500	3500	3500			2520	3070	3070			2200	8660	10130	620	2140	2740	2.8	9.8	12.5	4.05	2164	5.88	A	3.8
	2500	3500	5000			2310	2800	4190			2200	9300	10500	620	2150	2750	2.8	9.8	12.6	4.33	2158	5.88	A	3.81
	3500	3500	3500			2910	2910	2910			2200	8730	10220	620	2150	2750	2.8	9.8	12.6	4.06	2158	5.88	A	3.81
	3500	3500	5000			2660	2660	3980			2200	9300	10900	620	2180	2790	2.8	10	12.8	4.27	2158	5.88	A	3.81
4 Unit	2000	2000	2000	2000		2130	2130	2130	2130		2200	8520	9970	620	2100	2690	3	9.6	12.3	4.06	2158	5.88	A	3.81
	2000	2000	2000	2500		1910	1910	1910	2850		2200	8580	10040	620	2100	2690	3	9.6	12.3	4.09	2158	5.88	A	3.81
	2000	2000	2000	3500		1800	1800	1800	3250		2200	8650	10120	620	2140	2740	3	9.8	12.5	4.04	2158	5.88	A	3.81
	2000	2000	2000	5000		1620	1620	1620	4440		2200	9300	10900	620	2200	2820	3	10.1	12.9	4.23	2158	5.88	A	3.81
	2000	2000	2500	2500		1730	1730	2590	2590		2200	8640	10100	620	2140	2740	3	9.8	12.5	4.04	2158	5.88	A	3.81
	2000	2000	2500	3500		1640	1640	2460	2970		2200	8710	10190	620	2140	2740	3	9.8	12.5	4.07	2158	5.88	A	3.81
	2000	2000	2500	5000		1490	1490	2240	4080		2200	9300	10900	620	2200	2820	3	10.1	12.9	4.23	2158	5.88	A	3.81
	2000	2000	3500	3500		1560	1560	2830	2830		2200	8780	10270	620	2180	2790	3	10.0	12.8	4.03	2158	5.88	A	3.81
	2000	2500	2500	2500		1580	2370	2370	2370		2200	8690	10170	620	2140	2740	3	9.8	12.5	4.06	2158	5.88	A	3.81
	2000	2500	2500	3500		1510	2260	2260	2730		2200	8760	10250	620	2180	2790	3	10.0	12.8	4.02	2158	5.88	A	3.81
	2000	2500	2500	5000		1390	2070	2070	3770		2200	9300	10900	620	2250	2820	3	10.3	12.9	4.13	2158	5.88	A	3.81
	2000	2500	3500	3500		1520	2260	2760	2760		2200	9300	10900	620	2200	2820	3	10.1	12.9	4.23	2158	5.88	A	3.81
	2500	2500	2500	2500		2190	2190	2190	2190		2200	8760	10240	620	2140	2740	3	9.8	12.5	4.09	2158	5.88	A	3.81
	2500	2500	2500	3500		2210	2210	2210	2670		2200	9300	10900	620	2180	2790	3	10.0	12.8	4.27	2158	5.88	A	3.81
	2500	2500	3500	3500		2100	2100	2550	2550		2200	9300	10900	620	2200	2820	3	10.1	12.9	4.23	2158	5.88	A	3.81

1. EER and COP declared only for the purpose of tax deductions in force at the time of the creation of this catalog.
2. The above is the value for connecting with the following indoor units.
   - AR**KSPDBWKNEU
3. You can not connect a single unit.
4. Power consumption include indoor unit power.

2 Combination table

2-7. AJ100FCJ5EH/EU

		Indoor Index					Cooling Capacity (W)					Capacity			Power Consumption			Current			Effic. NOM. Cooling. At 35℃/27℃	Qce	SEASONAL EFFICIENCY (ACCORDING EN14825)	
		A	B	C	D	E	A	B	C	D	E	W			W			A			EER	kWh	Class	SEER
												MIN	NOM	MAX	MIN	NOM	MAX	MIN	NOM	MAX				
COOLING	2 Unit	2000	2000				2000	2000				1680	4000	4900	610	1260	1650	2.8	5.8	7.6	3.17	240	A+	5.85
		2000	2500				2000	2500				1680	4500	5530	610	1400	1860	2.8	6.4	8.5	3.21	272	A+	5.79
		2000	3500				2000	3500				1710	5500	6950	620	1750	2330	2.8	8.0	10.7	3.14	343	A+	5.61
		2000	5000				2000	5000				2210	7000	8690	630	2190	2910	2.9	10.0	13.3	3.20	455	A	5.38
		2000	6800				1830	6240				2280	8070	10110	650	2550	3390	3	11.7	15.5	3.16	516	A	5.47
		2500	2500				2500	2500				1680	5000	6320	610	1600	2120	2.8	7.3	9.7	3.13	298	A+	5.87
		2500	3500				2500	3500				1710	6000	7270	620	1840	2430	3	8.4	11.1	3.26	364	A+	5.77
		2500	5000				2500	5000				2210	7500	9320	630	2340	3120	3	10.7	14.3	3.21	515	A	5.48
		2500	6800				2190	5960				2280	8150	10110	650	2550	3390	3	11.7	15.5	3.2	513	A	5.56
		3500	3500				3500	3500				2170	7000	8530	620	2130	2850	3	9.7	13	3.29	454	A	5.4
		3500	5000				3300	4720				2240	8020	9950	640	2490	3330	3	11.4	15.2	3.22	515	A	5.49
		3500	6800				2920	5670				2480	8590	10740	660	2700	3600	3	12.4	16.5	3.18	538	A	5.59
		5000	5000				4280	4280				2440	8560	10430	650	2650	3500	3	12.1	16	3.23	539	A	5.56
		5000	6800				3740	5080				2510	8820	10900	670	2760	3670	3	12.6	16.8	3.2	551	A+	5.61
		6800	6800				4550	4550				3110	9100	11000	690	2830	3740	3	13.0	17.1	3.22	547	A+	5.82
	3 Unit	2000	2000	2000			2000	2000	2000			1760	6000	7270	640	1870	2460	2.9	8.6	11.3	3.21	352	A+	5.96
		2000	2000	2500			2000	2000	2500			1760	6500	7900	640	2010	2660	2.9	9.2	12.2	3.23	377	A+	6.04
		2000	2000	3500			2000	2000	3500			2280	7500	8850	650	2260	2980	3	10.3	13.6	3.32	492	A	5.33
		2000	2000	5000			1930	1930	4830			2310	8690	10270	660	2610	3450	3	11.9	15.8	3.33	500	A+	6.08
		2000	2000	6800			1660	1660	5650			2550	8970	10430	680	2680	3530	3.1	12.3	16.2	3.35	536	A+	5.85
		2000	2500	2500			2000	2500	2500			2240	7000	8370	640	2110	2820	2.9	9.7	12.9	3.32	467	A	5.24
		2000	2500	3500			2000	2500	3500			2280	8000	9320	650	2350	3130	3	10.8	14.3	3.4	473	A+	5.92
		2000	2500	5000			1850	2310	4620			2310	8780	10270	660	2610	3450	3	11.9	15.8	3.36	504	A+	6.09
		2000	2500	6800			1550	1940	5270			2550	8760	10430	680	2680	3530	3.1	12.3	16.2	3.27	505	A+	6.07
		2000	3500	3500			1930	3380	3380			2280	8690	10270	650	2600	3440	3	11.9	15.7	3.34	500	A+	6.08
		2000	3500	5000			1700	2980	4250			2510	8930	10430	670	2660	3510	3.1	12.2	16.1	3.36	512	A++	6.11
		2000	3500	6800			1460	2550	4950			2760	8960	10740	690	2730	3630	3.2	12.5	16.6	3.28	537	A+	5.84
		2000	5000	5000			1480	3710	3710			2720	8900	10740	680	2720	3630	3.1	12.4	16.6	3.27	512	A+	6.09
		2000	5000	6800			1340	3360	4560			3150	9260	11000	700	2840	3750	3.2	13	17.2	3.26	547	A+	5.93
		2000	6800	6800			1260	4270	4270			3240	9800	11000	720	2860	3770	3.3	13.1	17.3	3.43	565	A+	6.07
		2500	2500	2500			2500	2500	2500			2240	7500	8850	640	2250	2970	2.9	10.3	13.6	3.33	492	A	5.34
		2500	2500	3500			2500	2500	3500			2280	8500	9950	650	2500	3340	3	11.4	15.3	3.4	490	A+	6.07
		2500	2500	5000			2210	2210	4430			2480	8850	10270	660	2610	3450	3	11.9	15.8	3.39	507	A++	6.11
		2500	2500	6800			1880	1880	5110			2550	8870	10740	680	2720	3630	3.1	12.4	16.6	3.26	510	A+	6.08
		2500	3500	3500			2310	3230	3230			2280	8770	10270	650	2600	3440	3	11.9	15.7	3.37	504	A+	6.09
		2500	3500	5000			1980	2770	3950			2510	8700	10430	670	2660	3510	3.1	12.2	16.1	3.27	502	A+	6.07
		2500	3500	6800			1770	2480	4810			2760	9060	10900	690	2780	3690	3.2	12.7	16.9	3.26	542	A+	5.85
		2500	5000	5000			1800	3600	3600			2720	9000	10900	680	2770	3680	3.1	12.7	16.8	3.25	539	A+	5.84
		2500	5000	6800			1640	3270	4450			3150	9360	11000	700	2740	3750	3.2	12.5	17.2	3.42	549	A+	5.97
		2500	6800	6800			1520	4140	4140			3240	9800	11000	720	2860	3770	3.3	13.1	17.3	3.43	565	A+	6.07
		3500	3500	3500			2980	2980	2980			2480	8940	10430	660	2650	3500	3	12.1	16	3.37	512	A++	6.11
		3500	3500	5000			2600	2600	3710			2680	8910	10740	670	2710	3620	3.1	12.4	16.6	3.29	512	A+	6.09
		3500	3500	6800			2350	2350	4560			3110	9260	11000	690	2830	3740	3.2	13	17.1	3.27	547	A+	5.93
		3500	5000	5000			2390	3410	3410			3110	9210	11000	690	2820	3740	3.2	12.9	17.1	3.27	548	A+	5.88
		3500	5000	6800			2240	3200	4360			3200	9800	11000	710	2800	3760	3.2	12.8	17.2	3.5	564	A+	6.08
		3500	6800	6800			2000	3900	3900			3290	9800	11000	730	2910	3780	3.3	13.3	17.3	3.37	567	A+	6.05
		5000	5000	5000			3260	3270	3270			3150	9800	11000	700	2790	3750	3.2	12.8	17.2	3.51	564	A+	6.08
		5000	5000	6800			2920	2920	3960			3240	9800	11000	720	2910	3770	3.3	13.3	17.3	3.37	567	A+	6.05
	4 Unit	2000	2000	2000	2000		2000	2000	2000	2000		2350	8000	9320	670	2380	3160	3	10.9	14.5	3.36	474	A+	5.91
		2000	2000	2000	2500		2000	2000	2000	2500		2350	8500	9950	670	2520	3360	3	11.5	15.4	3.37	491	A+	6.06
		2000	2000	2000	3500		1850	1850	1850	3230		2380	8780	10270	680	2620	3470	3	12.0	15.9	3.35	504	A+	6.09
		2000	2000	2000	5000		1580	1580	1580	3950		2590	8690	10430	690	2690	3540	3	12.3	16.2	3.23	502	A+	6.06
		2000	2000	2000	6800		1420	1420	1420	4820		2840	9080	10900	710	2800	3710	3	12.8	17	3.24	543	A+	5.85
		2000	2000	2500	2500		1930	1930	2420	2420		2350	8700	10270	670	2620	3460	3	12.0	15.8	3.32	501	A+	6.08
		2000	2000	2500	3500		1770	1770	2210	3100		2550	8850	10270	680	2620	3470	3	12.0	15.9	3.38	507	A++	6.11
		2000	2000	2500	5000		1530	1530	1910	3830		2590	8800	10740	690	2730	3640	3	12.5	16.7	3.22	508	A+	6.07
		2000	2000	2500	6800		1380	1380	1720	4680		3200	9160	10900	710	2800	3710	3	12.8	17	3.27	546	A+	5.87
		2000	2000	3500	3500		1580	1580	2770	2770		2550	8700	10430	680	2680	3530	3	12.3	16.2	3.25	502	A+	6.06
		2000	2000	3500	5000		1440	1440	2520	3600		2800	9000	10900	700	2790	3700	3	12.8	16.9	3.23	540	A+	5.84
		2000	2000	3500	6800		1310	1310	2290	4450		3240	9360	11000	720	2760	3770	3	12.6	17.3	3.39	549	A+	5.97
		2000	2000	5000	5000		1330	1330	3320	3320		3200	9300	11000	710	2850	3760	3	13.0	17.2	3.26	549	A+	5.93
		2000	2000	5000	6800		1240	1240	3100	4220		3290	9800	11000	730	2870	3780	3	13.1	17.3	3.41	566	A+	6.06
		2000	2500	2500	2500		1850	2310	2310	2310		2350	8780	10270	670	2620	3460	3	12.0	15.8	3.35	504	A+	6.09
		2000	2500	2500	3500		1700	2130	2130	2980		2550	8940	10430	680	2670	3520	3	12.2	16.1	3.35	512	A++	6.11
		2000	2500	2500	5000		1480	1850	1850	3700		2760	8880	10740	690	2730	3640	3	12.5	16.7	3.25	511	A+	6.08
		2000	2500	2500	6800		1340	1680	1680	4560		3200	9260	11000	710	2850	3760	3	13.0	17.2	3.25	547	A+	5.92
		2000	2500	3500	3500		1530	1910	2680	2680		2550	8800	10740	680	2720	3630	3	12.4	16.6	3.24	507	A+	6.07
		2000	2500	3500	5000		1400	1750	2450	3500		3150	9100	10900	700	2790	3700	3	12.8	16.9	3.26	543	A+	5.86
		2000	2500	3500	6800		1280	1600	2240	4350		3240	9470	11000	720	2810	3770	3	12.9	17.3	3.37	551	A+	6.02
		2000	2500	5000	5000		1300	1620	3240	3240		3200	9400	11000	710	2800	3760	3	12.8	17.2	3.36	551	A+	5.97
		2000	2500	5000	6800		1200	1500	3010	4090		3290	9800	11000	730	2870	3780	3	13.1	17.3	3.41	566	A+	6.06
		2000	3500	3500	3500		1440	2520	2520	2520		2760	9000	10900	690	2780	3690	3	12.7	16.9	3.24	540	A+	5.84
		2000	3500	3500	5000		1330	2330	2330	3330		3150	9320	11000	700	2840	3750	3	13.0	17.2	3.28	549	A+	5.94
		2000	3500	3500	6800		1240	2170	2170	4220		3240	9800	11000	720	2860	3770	3	13.1	17.3	3.43	565	A+	6.07
		2000	3500	5000	5000		1270	2210	3160	3160		3240	9800	11000	720	2850	3770	3	13.0	17.3	3.44	565	A+	6.07
		2000	3500	5000	6800		1140	1980	2830	3850		3330	9800	11000	740	2920	3790	3	13.4	17.3	3.36	567	A+	6.05

COOLING

	Indoor Index					Cooling Capacity (W)					Capacity			Power Consumption			Current			Effic. NOM. Cooling. At 35°C/27°C	Qce	SEASONAL EFFICIENCY (ACCORDING EN14825)	
	A	B	C	D	E	A	B	C	D	E	W			W			A						
											MIN	NOM	MAX	MIN	NOM	MAX	MIN	NOM	MAX	EER	kWh	Class	SEER
4 Unit	2000	5000	5000	5000		1160	2880	2880	2880		3290	9800	11000	730	2920	3780	3	13.4	17.3	3.36	567	A+	6.05
	2500	2500	2500	2500		2210	2210	2210	2210		2510	8840	10270	670	2620	3460	3	12.0	15.8	3.37	507	A++	6.1
	2500	2500	2500	3500		1980	1980	1980	2770		2550	8710	10430	680	2670	3520	3	12.2	16.1	3.26	503	A+	6.07
	2500	2500	2500	5000		1800	1800	1800	3600		2760	9000	10900	690	2780	3690	3	12.7	16.9	3.24	540	A+	5.84
	2500	2500	2500	6800		1640	1640	1640	4460		3200	9380	11000	710	2750	3760	3	12.6	17.2	3.41	550	A+	5.97
	2500	2500	3500	3500		1850	1850	2600	2600		2720	8900	10740	680	2720	3630	3	12.4	16.6	3.27	512	A+	6.09
	2500	2500	3500	5000		1700	1700	2390	3410		3150	9200	11000	700	2830	3750	3	13.0	17.2	3.25	548	A+	5.88
	2500	2500	3500	6800		1600	1600	2240	4360		3240	9800	11000	720	2810	3770	3	12.9	17.3	3.49	564	A+	6.08
	2500	2500	5000	5000		1630	1630	3270	3270		3200	9800	11000	710	2800	3760	3	12.8	17.2	3.5	564	A+	6.08
	2500	2500	5000	6800		1460	1460	2920	3960		3290	9800	11000	730	2920	3780	3	13.4	17.3	3.36	567	A+	6.05
	2500	3500	3500	3500		1750	2450	2450	2450		3110	9100	10900	690	2780	3690	3	12.7	16.9	3.27	543	A+	5.86
	2500	3500	3500	5000		1620	2270	2270	3240		3150	9400	11000	700	2790	3750	3	12.8	17.2	3.37	551	A+	5.97
	2500	3500	3500	6800		1510	2100	2100	4090		3240	9800	11000	720	2860	3770	3	13.1	17.3	3.43	565	A+	6.07
	2500	3500	3500	5000		1540	2140	3060	3060		3240	9800	11000	720	2850	3770	3	13.0	17.3	3.44	565	A+	6.07
	3500	3500	3500	3500		2330	2330	2330	2330		3110	9320	11000	690	2830	3740	3	13.0	17.1	3.29	549	A+	5.94
	3500	3500	3500	5000		2210	2210	2210	3170		3200	9800	11000	710	2840	3760	3	13.0	17.2	3.45	565	A+	6.07
	3500	3500	3500	6800		1980	1980	1980	3860		3290	9800	11000	730	2910	3780	3	13.3	17.3	3.37	567	A+	6.05
	3500	3500	5000	5000		2020	2020	2880	2880		3240	9800	11000	720	2910	3770	3	13.3	17.3	3.37	567	A+	6.05
5 Unit	2000	2000	2000	2000	2000	1900	1900	1900	1900	1900	2630	9500	10270	700	2650	3490	3	12.1	16	3.58	548	A+	6.06
	2000	2000	2000	2000	2500	1820	1820	1820	1820	2270	2630	9550	10430	700	2700	3550	3	12.4	16.2	3.54	551	A+	6.06
	2000	2000	2000	2000	3500	1680	1680	1680	1680	2940	2660	9660	10740	710	2750	3650	3	12.6	16.7	3.51	557	A+	6.07
	2000	2000	2000	2000	5000	1540	1540	1540	1540	3840	3240	10000	10900	720	2810	3720	3	12.9	17	3.56	573	A++	6.11
	2000	2000	2000	2000	6800	1350	1350	1350	1350	4600	3330	10000	11000	740	2830	3790	3	13.0	17.3	3.53	573	A++	6.1
	2000	2000	2000	2500	2500	1750	1750	1750	2180	2180	2630	9610	10430	700	2700	3550	3	12.4	16.2	3.56	554	A+	6.07
	2000	2000	2000	2500	3500	1620	1620	1620	2020	2830	2840	9710	10740	710	2750	3650	3	12.6	16.7	3.53	559	A+	6.08
	2000	2000	2000	2500	5000	1480	1480	1480	1860	3700	3240	10000	11000	720	2860	3770	3	13.1	17.3	3.5	574	A+	6.09
	2000	2000	2000	2500	6800	1310	1310	1310	1630	4440	3330	10000	11000	740	2830	3790	3	13.0	17.3	3.53	573	A++	6.1
	2000	2000	2000	3500	3500	1540	1540	1540	2690	2690	3200	10000	10900	710	2800	3710	3	12.8	17	3.57	573	A++	6.11
	2000	2000	2000	3500	5000	1380	1380	1380	2410	3450	3290	10000	11000	730	2820	3780	3	12.9	17.3	3.55	573	A++	6.11
	2000	2000	2000	3500	6800	1230	1230	1230	2150	4160	3380	10000	11000	750	2880	3800	3	13.2	17.4	3.47	574	A+	6.09
	2000	2000	2000	5000	5000	1240	1240	1240	3140	3140	3330	10000	11000	740	2880	3790	3	13.2	17.3	3.47	574	A+	6.09
	2000	2000	2500	2500	2500	1680	1680	2100	2100	2100	2630	9660	10740	700	2740	3650	3	12.5	16.7	3.53	557	A+	6.07
	2000	2000	2500	2500	3500	1600	1600	2000	2000	2800	2840	10000	10900	710	2800	3710	3	12.8	17	3.57	573	A++	6.11
	2000	2000	2500	2500	5000	1430	1430	1790	1790	3560	3240	10000	11000	720	2860	3770	3	13.1	17.3	3.5	574	A+	6.09
	2000	2000	2500	2500	6800	1270	1270	1580	1580	4300	3330	10000	11000	740	2880	3790	3	13.2	17.3	3.47	574	A+	6.09
	2000	2000	2500	3500	3500	1480	1480	1860	2590	2590	3200	10000	11000	710	2850	3760	3	13.0	17.2	3.51	574	A++	6.1
	2000	2000	2500	3500	5000	1330	1330	1680	2330	3330	3290	10000	11000	730	2820	3780	3	12.9	17.3	3.55	573	A++	6.11
	2000	2000	2500	3500	6800	1190	1190	1490	2080	4050	3380	10000	11000	750	2930	3800	3	13.4	17.4	3.41	575	A+	6.08
	2000	2000	2500	5000	5000	1210	1210	1520	3030	3030	3330	10000	11000	740	2930	3790	3	13.4	17.3	3.41	575	A+	6.08
	2000	2000	3500	3500	3500	1370	1370	2420	2420	2420	3240	10000	11000	720	2810	3770	3	12.9	17.3	3.56	573	A++	6.11
	2000	2000	3500	3500	5000	1250	1250	2190	2190	3120	3290	10000	11000	730	2870	3780	3	13.1	17.3	3.48	574	A+	6.09
	2000	2500	2500	2500	2500	1620	2020	2020	2020	2020	2800	9700	10740	700	2740	3650	3	12.5	16.7	3.54	559	A+	6.08
	2000	2500	2500	2500	3500	1550	1920	1920	1920	2690	3200	10000	10900	710	2800	3710	3	12.8	17	3.57	573	A++	6.11
	2000	2500	2500	2500	5000	1390	1720	1720	1720	3450	3240	10000	11000	720	2810	3770	3	12.9	17.3	3.56	573	A++	6.11
	2000	2500	2500	2500	6800	1240	1530	1530	1530	4170	3330	10000	11000	740	2880	3790	3	13.2	17.3	3.47	574	A+	6.09
	2000	2500	2500	3500	3500	1440	1790	1790	2490	2490	3200	10000	11000	710	2850	3760	3	13.0	17.2	3.51	574	A++	6.1
	2000	2500	2500	3500	5000	1290	1610	1610	2260	3230	3290	10000	11000	730	2860	3780	3	13.1	17.3	3.5	574	A+	6.09
	2000	2500	2500	3500	6800	1160	1450	1450	2020	3920	3380	10000	11000	750	2930	3800	3	13.4	17.4	3.41	575	A+	6.08
	2000	2500	2500	5000	5000	1180	1470	1470	2940	2940	3330	10000	11000	740	2930	3790	3	13.4	17.3	3.41	575	A+	6.08
	2000	2500	3500	3500	3500	1340	1670	2330	2330	2330	3240	10000	11000	720	2810	3770	3	12.9	17.3	3.56	573	A++	6.11
	2000	2500	3500	3500	5000	1210	1520	2120	2120	3030	3290	10000	11000	730	2920	3780	3	13.4	17.3	3.42	575	A+	6.08
	2000	3500	3500	3500	3500	1240	2190	2190	2190	2190	3240	10000	11000	720	2860	3770	3	13.1	17.3	3.5	574	A+	6.09
	2500	2500	2500	2500	2500	2000	2000	2000	2000	2000	3000	10000	11000	700	2900	3700	3	13.3	16.9	3.45	575	A+	6.09
	2500	2500	2500	2500	3500	1850	1850	1850	1850	2600	3200	10000	11000	710	2840	3760	3	13.0	17.2	3.52	573	A++	6.1
	2500	2500	2500	2500	5000	1670	1670	1670	1670	3320	3240	10000	11000	720	2810	3770	3	12.9	17.3	3.56	573	A++	6.11
	2500	2500	2500	2500	6800	1490	1490	1490	1490	4040	3330	10000	11000	740	2930	3790	3	13.4	17.3	3.41	575	A+	6.08
	2500	2500	2500	3500	3500	1720	1720	1720	2420	2420	3200	10000	11000	710	2800	3760	3	12.8	17.2	3.57	573	A++	6.11
	2500	2500	2500	3500	5000	1560	1560	1560	2190	3130	3290	10000	11000	730	2860	3780	3	13.1	17.3	3.5	575	A+	6.09
	2500	2500	3500	3500	3500	1610	1610	2260	2260	2260	3240	10000	11000	720	2850	3770	3	13.0	17.3	3.51	574	A++	6.1
	2500	2500	3500	3500	5000	1470	1470	2060	2060	2940	3290	10000	11000	730	2920	3780	3	13.4	17.3	3.42	575	A+	6.08
	2500	3500	3500	3500	3500	1520	2120	2120	2120	2120	3240	10000	11000	720	2910	3770	3	13.3	17.3	3.44	575	A+	6.09

1. EER and COP declared only for the purpose of tax deductions in force at the time of the creation of this catalog.
2. The above is the value for connecting with the following indoor units.
   - AR**KSPDBWKNEU
3. You can not connect a single unit.
4. Power consumption include indoor unit power.

HEATING

	Indoor Index					Heating Capacity (W)					Capacity W			Power Consumption W			Current A			Effic. NOM. Heating. At 7℃/20℃	Qhe	SEASONAL EFFICIENCY (ACCORDING EN14825)		
	A	B	C	D	E	A	B	C	D	E	MIN	NOM	MAX	MIN	NOM	MAX	MIN	NOM	MAX	COP	kWh	P design	Class	SCOP
2 Unit	2000	2000				2200	2200				1240	4400	5530	460	1250	1520	2.1	5.7	7.0	3.52	1068	3.05	A+	4.00
	2000	2500				2200	3300				1240	5500	6790	460	1520	1850	2.1	7.0	8.5	3.62	1489	4.21	A	3.95
	2000	3500				2200	4000				1270	6200	7580	470	1700	2060	2.2	7.8	9.4	3.65	1736	4.91	A	3.96
	2000	5000				2200	6000				1300	8200	10110	480	2240	2750	2.2	10.3	12.6	3.66	2164	5.88	A	3.80
	2000	6800				2200	7800				1500	10000	12480	500	2790	3390	2.3	12.8	15.5	3.58	2815	7.70	A	3.83
	2500	2500				3300	3300				1240	6600	8220	460	1820	2230	2.1	8.3	10.2	3.63	1715	4.91	A+	4
	2500	3500				3300	4000				1270	7300	9010	470	2010	2440	2	9.2	11.2	3.63	1801	5.09	A	3.95
	2500	5000				3300	6000				1300	9300	11690	480	2590	3160	2	11.9	14.5	3.59	2815	7.7	A	3.83
	2500	6800				3150	7450				1500	10600	13110	500	2920	3560	2	13.4	16.3	3.63	2816	7.7	A	3.83
	3500	3500				4000	4000				1270	8000	9800	470	2190	2650	2	10.0	12.1	3.65	2164	5.88	A	3.8
	3500	5000				4000	6000				1470	10000	12320	490	2730	3330	2	12.5	15.2	3.66	2815	7.7	A	3.83
	3500	6800				3590	7010				1530	10600	13110	510	2930	3560	2	13.4	16.3	3.62	2823	7.7	A	3.82
	5000	5000				5300	5300				1650	10600	13110	500	2920	3560	2	13.4	16.3	3.63	2812	7.7	A	3.83
	5000	6800				4610	5990				1820	10600	13110	520	2940	3580	2	13.5	16.4	3.61	2761	7.7	A	3.9
	6800	6800				5300	5300				2160	10600	12960	540	2920	3560	3	13.4	16.3	3.63	2837	7.91	A	3.9
3 Unit	2000	2000	2000			2200	2200	2200			1320	6600	7580	490	1720	2090	2.2	7.9	9.6	3.84	2012	5.65	A	3.93
	2000	2000	2500			2200	2200	3300			1320	7700	9010	490	2030	2460	2.2	9.3	11.3	3.79	2012	5.65	A	3.93
	2000	2000	3500			2200	2200	4000			1350	8400	9800	500	2210	2680	2.3	10.1	12.3	3.80	2164	5.88	A	3.80
	2000	2000	5000			2050	2050	5590			1530	9690	12170	510	2710	3320	2.3	12.4	15.2	3.58	2804	7.91	A	3.95
	2000	2000	6800			1780	1780	6300			1750	9860	12170	530	2730	3340	2.4	12.5	15.3	3.61	2837	7.91	A	3.90
	2000	2500	2500			2200	3300	3300			1320	8800	10740	490	2380	2920	2.2	10.9	13.4	3.7	2164	5.88	A	3.8
	2000	2500	3500			2200	3300	4000			1350	9500	11380	500	2520	3090	2.3	11.5	14.1	3.77	2804	7.91	A	3.95
	2000	2500	5000			1870	2810	5110			1530	9790	11850	510	2670	3230	2.3	12.2	14.8	3.67	2804	7.91	A	3.95
	2000	2500	6800			1650	2470	5850			1860	9970	12170	530	2730	3340	2.4	12.5	15.3	3.65	2804	7.91	A	3.95
	2000	3500	3500			2090	3790	3790			1500	9670	12170	500	2700	3310	2.3	12.4	15.1	3.58	2804	7.91	A	3.95
	2000	3500	5000			1780	3230	4850			1720	9860	12170	520	2720	3320	2.4	12.4	15.2	3.63	2804	7.91	A	3.95
	2000	3500	6800			1580	2870	5590			1890	10040	12320	540	2780	3380	2.5	12.7	15.5	3.61	2837	7.91	A	3.9
	2000	5000	5000			1560	4250	4250			1860	10060	12320	530	2780	3380	2.4	12.7	15.5	3.62	2804	7.91	A	3.95
	2000	5000	6800			1490	4050	5270			2200	10810	12800	550	2880	3520	2.5	13.2	16.1	3.75	2837	7.91	A	3.9
	2000	6800	6800			1360	4820	4820			2280	11000	12960	570	2950	3590	2.6	13.5	16.4	3.73	2837	7.91	A	3.9
	2500	2500	2500			3210	3210	3210			1470	9630	11850	490	2650	3210	2.2	12.1	14.7	3.63	2164	5.88	A	3.8
	2500	2500	3500			3020	3020	3660			1500	9700	11530	500	2560	3140	2.3	11.7	14.4	3.79	2804	7.91	A	3.95
	2500	2500	5000			2590	2590	4710			1680	9890	12320	510	2760	3360	2.3	12.6	15.4	3.58	2804	7.91	A	3.95
	2500	2500	6800			2440	2440	5770			1860	10650	12480	530	2820	3420	2.4	12.9	15.7	3.78	2804	7.91	A	3.95
	2500	3500	3500			2850	3460	3460			1500	9770	11850	500	2660	3220	2.3	12.2	14.7	3.67	2804	7.91	A	3.95
	2500	3500	5000			2470	3000	4500			1820	9970	12170	520	2720	3320	2.4	12.4	15.2	3.67	2804	7.91	A	3.95
	2500	3500	6800			2340	2840	5540			1890	10720	12480	540	2830	3430	2.5	13	15.7	3.79	2837	7.91	A	3.9
	2500	5000	5000			2320	4210	4210			1860	10740	12480	530	2820	3420	2.4	12.9	15.7	3.81	2837	7.91	A	3.9
	2500	5000	6800			2120	3860	5020			2200	11000	12960	550	2930	3570	2.5	13.4	16.3	3.75	2837	7.91	A	3.9
	2500	6800	6800			1920	4540	4540			2280	11000	13110	570	2990	3630	2.6	13.7	16.6	3.68	2837	7.91	A	3.9
	3500	3500	3500			3280	3280	3280			1680	9840	12170	510	2710	3310	2.3	12.4	15.1	3.63	2804	7.91	A	3.95
	3500	3500	5000			2870	2870	4300			1820	10040	12320	520	2770	3370	2.4	12.7	15.4	3.62	2804	7.91	A	3.95
	3500	3500	6800			2730	2730	5330			2160	10790	12800	540	2870	3510	2.5	13.1	16.1	3.76	2837	7.91	A	3.9
	3500	5000	5000			2700	4050	4050			2160	10800	12800	540	2870	3510	2.5	13.1	16.1	3.76	2837	7.91	A	3.9
	3500	5000	6800			2470	3710	4820			2240	11000	12960	560	2930	3570	2.6	13.4	16.3	3.75	2837	7.91	A	3.9
	3500	6800	6800			2240	4380	4380			2320	11000	13430	580	3040	3720	2.7	13.9	17	3.62	2837	7.91	A	3.9
	5000	5000	5000			3660	3670	3670			2200	11000	12960	550	2930	3570	2.5	13.4	16.3	3.75	2837	7.91	A	3.9
	5000	5000	6800			3330	3330	4340			2280	11000	13430	570	3040	3710	2.6	13.9	17	3.62	2837	7.91	A	3.9
4 Unit	2000	2000	2000	2000		2200	2200	2200	2200		1400	8800	9800	520	2240	2700	2	10.3	12.4	3.93	2804	7.91	A	3.95
	2000	2000	2000	2500		2140	2140	2140	3210		1560	9630	11380	520	2550	3120	2	11.7	14.3	3.78	2804	7.91	A	3.95
	2000	2000	2000	3500		2010	2010	2010	3660		1590	9690	12170	530	2730	3330	2	12.5	15.2	3.55	2804	7.91	A	3.95
	2000	2000	2000	5000		1730	1730	1730	4710		1780	9900	12170	540	2740	3350	3	12.5	15.3	3.61	2804	7.91	A	3.95
	2000	2000	2000	6800		1630	1630	1630	5770		1960	10660	12320	560	2810	3410	3	12.9	15.6	3.79	2837	7.91	A	3.9
	2000	2000	2500	2500		1950	1950	2920	2920		1560	9740	11530	520	2590	3160	2	11.9	14.5	3.76	2804	7.91	A	3.95
	2000	2000	2500	3500		1840	1840	2760	3350		1590	9790	11850	530	2680	3250	2	12.3	14.9	3.65	2769	7.91	A+	4
	2000	2000	2500	5000		1610	1610	2410	4380		1890	10010	12170	540	2740	3350	3	12.5	15.3	3.65	2804	7.91	A	3.95
	2000	2000	2500	6800		1530	1530	2290	5410		1960	10760	12480	560	2850	3450	3	13.0	15.8	3.78	2837	7.91	A	3.9
	2000	2000	3500	3500		1750	1750	3190	3190		1750	9880	12170	530	2730	3340	2	12.5	15.3	3.62	2804	7.91	A	3.95
	2000	2000	3500	5000		1630	1630	2960	4440		1930	10660	12320	550	2790	3390	3	12.8	15.5	3.82	2837	7.91	A	3.9
	2000	2000	3500	6800		1470	1470	2670	5210		2280	10820	12800	570	2900	3540	3	13.3	16.2	3.73	2837	7.91	A	3.9
	2000	2000	5000	5000		1460	1460	3970	3970		2240	10860	12800	560	2890	3530	3	13.2	16.2	3.76	2837	7.91	A	3.9
	2000	2000	5000	6800		1330	1330	3630	4710		2320	11000	12960	580	2960	3600	3	13.5	16.5	3.72	2837	7.91	A	3.9
	2000	2500	2500	2500		1790	2690	2690	2690		1720	9860	12170	520	2720	3330	2	12.4	15.2	3.63	2804	7.91	A	3.95
	2000	2500	2500	3500		1710	2560	2560	3100		1750	9930	12320	530	2770	3370	2	12.7	15.4	3.58	2804	7.91	A	3.95
	2000	2500	2500	5000		1590	2380	2380	4330		1890	10680	12480	540	2830	3430	3	13.0	15.7	3.77	2804	7.91	A	3.95
	2000	2500	2500	6800		1440	2160	2160	5100		2240	10860	12960	560	2940	3580	3	13.5	16.4	3.69	2837	7.91	A	3.9
	2000	2500	3500	3500		1630	2440	2960	2960		1860	9990	12170	530	2730	3340	2	12.5	15.3	3.66	2804	7.91	A	3.95
	2000	2500	3500	5000		1530	2290	2780	4170		1930	10770	12480	550	2840	3440	3	13.0	15.7	3.79	2837	7.91	A	3.9
	2000	2500	3500	6800		1400	2100	2540	4960		2280	11000	12960	570	2940	3580	3	13.5	16.4	3.74	2837	7.91	A	3.9
	2000	2500	5000	5000		1390	2070	3770	3770		2240	11000	12960	560	2940	3580	3	13.5	16.4	3.74	2837	7.91	A	3.9
	2000	2500	5000	6800		1250	1880	3420	4450		2320	11000	13110	580	3000	3640	3	13.7	16.7	3.67	2837	7.91	A	3.9
	2000	3500	3500	3500		1560	2830	2830	2830		1890	10050	12320	540	2780	3380	3	12.7	15.5	3.62	2837	7.91	A	3.9
	2000	3500	3500	5000		1470	2670	2670	4010		2200	10820	12800	550	2880	3520	3	13.2	16.1	3.76	2837	7.91	A	3.9
	2000	3500	3500	6800		1350	2440	2440	4770		2280	11000	12960	570	2950	3590	3	13.5	16.4	3.73	2837	7.91	A	3.9
	2000	3500	5000	5000		1330	2410	3630	3630		2280	11000	12960	570	2940	3580	3	13.5	16.4	3.74	2837	7.91	A	3.9
	2000	3500	5000	6800		1210	2200	3300	4290		2360	11000	13430	590	3050	3730	3	14.0	17.1	3.61	2837	7.91	A	3.9

HEATING

	Indoor Index					Heating Capacity (W)					Capacity W			Power Consumption W			Current A			Effic. NOM. Heating. At 7℃/20℃	Qhe	SEASONAL EFFICIENCY (ACCORDING EN14825)		
	A	B	C	D	E	A	B	C	D	E	MIN	NOM	MAX	MIN	NOM	MAX	MIN	NOM	MAX	COP	kWh	P design	Class	SCOP
4 Unit	2000	5000	5000	5000		1190	3270	3270	3270		2320	11000	13430	580	3050	3720	3	14.0	17	3.61	2837	7.91	A	3.9
	2500	2500	2500	2500		2490	2490	2490	2490		1820	9960	12480	520	2810	3410	2	12.9	15.6	3.54	2769	7.91	A+	4
	2500	2500	2500	3500		2380	2380	2380	2880		1860	10020	12320	530	2770	3370	2	12.7	15.4	3.62	2804	7.91	A	3.95
	2500	2500	2500	5000		2240	2240	2240	4080		2160	10800	12800	540	2870	3510	3	13.1	16.1	3.76	2837	7.91	A	3.9
	2500	2500	2500	6800		2050	2050	2050	4850		2240	11000	12960	560	2940	3580	3	13.5	16.4	3.74	2837	7.91	A	3.9
	2500	2500	3500	3500		2410	2410	2920	2920		1860	10660	12480	530	2820	3420	2	12.9	15.7	3.78	2804	7.91	A	3.95
	2500	2500	3500	5000		2160	2160	2620	3930		2200	10870	12960	550	2920	3560	3	13.4	16.3	3.72	2837	7.91	A	3.9
	2500	2500	3500	6800		1970	1970	2400	4660		2280	11000	13110	570	2990	3620	3	13.7	16.6	3.68	2837	7.91	A	3.9
	2500	2500	5000	5000		1950	1950	3550	3550		2240	11000	13110	560	2980	3620	3	13.6	16.6	3.69	2837	7.91	A	3.9
	2500	2500	5000	6800		1780	1780	3240	4200		2320	11000	13590	580	3090	3760	3	14.1	17.2	3.56	2837	7.91	A	3.9
	2500	3500	3500	3500		2320	2810	2810	2810		1890	10750	12480	540	2830	3430	3	13.0	15.7	3.8	2837	7.91	A	3.9
	2500	3500	3500	5000		2100	2540	2540	3820		2200	11000	12960	550	2930	3570	3	13.4	16.3	3.75	2837	7.91	A	3.9
	2500	3500	3500	6800		1910	2300	2300	4490		2280	11000	13110	570	2990	3630	3	13.7	16.6	3.68	2837	7.91	A	3.9
	2500	3500	3500	5000		1880	2280	3420	3420		2280	11000	13110	570	2990	3620	3	13.7	16.6	3.68	2837	7.91	A	3.9
	3500	3500	3500	3500		2700	2700	2700	2700		2160	10800	12800	540	2870	3510	3	13.1	16.1	3.76	2837	7.91	A	3.9
	3500	3500	3500	5000		2440	2440	2440	3680		2240	11000	12960	560	2930	3570	3	13.4	16.3	3.75	2837	7.91	A	3.9
	3500	3500	3500	6800		2220	2220	2220	4340		2320	11000	13430	580	3040	3720	3	13.9	17	3.62	2837	7.91	A	3.9
	3500	3500	5000	5000		2200	2200	3300	3300		2280	11000	13430	570	3040	3710	3	13.9	17	3.62	2837	7.91	A	3.9
5 Unit	2000	2000	2000	2000	2000	2200	2200	2200	2200	2200	1650	11000	13110	550	2970	3610	3	13.6	16.5	3.7	2837	7.91	A	3.9
	2000	2000	2000	2000	2500	2080	2080	2080	2080	3120	1820	11440	12960	550	2930	3570	3	13.4	16.3	3.9	2837	7.91	A	3.9
	2000	2000	2000	2000	3500	1990	1990	1990	1990	3620	1850	11580	13110	560	2980	3610	3	13.6	16.5	3.89	2837	7.91	A	3.9
	2000	2000	2000	2000	5000	1710	1710	1710	1710	4660	2000	11500	13430	570	3040	3710	3	13.9	17	3.78	2837	7.91	A	3.9
	2000	2000	2000	2000	6800	1580	1580	1580	1580	5610	2360	11930	13750	590	3140	3810	3	14.4	17.4	3.8	2837	7.91	A	3.9
	2000	2000	2000	2500	2500	1950	1950	1950	2930	2930	1930	11710	13430	550	3020	3690	3	13.8	16.9	3.88	2837	7.91	A	3.9
	2000	2000	2000	2500	3500	1880	1880	1880	2820	3420	1960	11880	13110	560	2980	3610	3	13.6	16.5	3.99	2837	7.91	A	3.9
	2000	2000	2000	2500	5000	1630	1630	1630	2440	4450	2280	11780	13590	570	3080	3750	3	14.1	17.2	3.82	2837	7.91	A	3.9
	2000	2000	2000	2500	6800	1490	1490	1490	2240	5290	2360	12000	13900	590	3190	3860	3	14.6	17.7	3.76	2837	7.91	A	3.9
	2000	2000	2000	3500	3500	1730	1730	1730	3140	3140	1960	11470	13430	560	3030	3700	3	13.9	16.9	3.79	2837	7.91	A	3.9
	2000	2000	2000	3500	5000	1580	1580	1580	2880	4320	2320	11940	13750	580	3130	3800	3	14.3	17.4	3.81	2837	7.91	A	3.9
	2000	2000	2000	3500	6800	1430	1430	1430	2620	5090	2400	12000	14000	600	3240	3940	3	14.8	18	3.7	2837	7.91	A	3.9
	2000	2000	2000	5000	5000	1420	1420	1420	3870	3870	2360	12000	14000	590	3230	3940	3	14.8	18	3.72	2837	7.91	A	3.9
	2000	2000	2500	2500	2500	1840	1840	2760	2760	2760	1930	11960	13430	550	3020	3690	3	13.8	16.9	3.96	2837	7.91	A	3.9
	2000	2000	2500	2500	3500	1690	1690	2540	2540	3080	1960	11540	13590	560	3070	3740	3	14.1	17.1	3.76	2837	7.91	A	3.9
	2000	2000	2500	2500	5000	1550	1550	2330	2330	4240	2280	12000	13900	570	3170	3840	3	14.5	17.6	3.79	2837	7.91	A	3.9
	2000	2000	2500	2500	6800	1400	1400	2110	2110	4980	2360	12000	14000	590	3280	3940	3	15.0	18	3.66	2837	7.91	A	3.9
	2000	2000	2500	3500	3500	1640	1640	2470	2990	2990	2240	11730	13590	560	3070	3740	3	14.1	17.1	3.82	2837	7.91	A	3.9
	2000	2000	2500	3500	5000	1490	1490	2240	2710	4070	2320	12000	13900	580	3170	3840	3	14.5	17.6	3.79	2837	7.91	A	3.9
	2000	2000	2500	3500	6800	1350	1350	2040	2460	4800	2400	12000	14000	600	3280	3940	3	15.0	18	3.66	2837	7.91	A	3.9
	2000	2000	2500	5000	5000	1340	1340	2020	3650	3650	2360	12000	14000	590	3280	3940	3	15.0	18	3.66	2837	7.91	A	3.9
	2000	2000	3500	3500	3500	1600	1600	2900	2900	2900	2280	11900	13750	570	3120	3790	3	14.3	17.3	3.81	2837	7.91	A	3.9
	2000	2000	3500	3500	5000	1430	1430	2610	2610	3920	2320	12000	14000	580	3220	3930	3	14.7	18	3.73	2837	7.91	A	3.9
	2000	2500	2500	2500	2500	1670	2500	2500	2500	2500	1930	11670	13590	550	3060	3730	3	14.0	17.1	3.81	2837	7.91	A	3.9
	2000	2500	2500	2500	3500	1620	2420	2420	2420	2940	2240	11820	13750	560	3110	3780	3	14.2	17.3	3.8	2837	7.91	A	3.9
	2000	2500	2500	2500	5000	1460	2190	2190	2190	3970	2280	12000	14000	570	3210	3920	3	14.7	17.9	3.74	2837	7.91	A	3.9
	2000	2500	2500	2500	6800	1330	1990	1990	1990	4700	2360	12000	14000	590	3320	3940	3	15.2	18	3.61	2837	7.91	A	3.9
	2000	2500	2500	3500	3500	1570	2350	2360	2860	2860	2240	12000	13900	560	3160	3830	3	14.5	17.5	3.8	2837	7.91	A	3.9
	2000	2500	2500	3500	5000	1400	2110	2110	2550	3830	2320	12000	14000	580	3260	3920	3	14.9	17.9	3.68	2837	7.91	A	3.9
	2000	2500	2500	3500	6800	1290	1920	1920	2330	4540	2400	12000	14000	600	3370	3940	3	15.4	18	3.56	2837	7.91	A	3.9
	2000	2500	2500	5000	5000	1280	1900	1900	3460	3460	2360	12000	14000	590	3370	3940	3	15.4	18	3.56	2837	7.91	A	3.9
	2000	2500	3500	3500	3500	1520	2260	2740	2740	2740	2280	12000	13900	570	3160	3830	3	14.5	17.5	3.8	2837	7.91	A	3.9
	2000	2500	3500	3500	5000	1360	2030	2460	2460	3690	2320	12000	14000	580	3270	3930	3	15.0	18	3.67	2837	7.91	A	3.9
	2000	3500	3500	3500	3500	1440	2640	2640	2640	2640	2280	12000	14000	570	3210	3920	3	14.7	17.9	3.74	2837	7.91	A	3.9
	2500	2500	2500	2500	2500	2400	2400	2400	2400	2400	3400	12000	14000	550	2930	3900	3	13.4	17.8	4.1	2837	7.91	A	3.9
	2500	2500	2500	2500	3500	2300	2300	2300	2300	2800	2240	12000	13900	560	3150	3820	3	14.4	17.5	3.81	2837	7.91	A	3.9
	2500	2500	2500	2500	5000	2060	2060	2060	2060	3760	2280	12000	14000	570	3260	3920	3	14.9	17.9	3.68	2837	7.91	A	3.9
	2500	2500	2500	2500	6800	1890	1890	1890	1890	4440	2360	12000	14000	590	3370	3940	3	15.4	18	3.56	2837	7.91	A	3.9
	2500	2500	2500	3500	3500	2210	2210	2210	2680	2690	2240	12000	14000	560	3200	3910	3	14.6	17.9	3.75	2837	7.91	A	3.9
	2500	2500	2500	3500	5000	1990	1990	1990	2410	3620	2320	12000	14000	580	3310	3920	3	15.1	17.9	3.63	2837	7.91	A	3.9
	2500	2500	3500	3500	3500	2130	2130	2580	2580	2580	2280	12000	14000	570	3250	3910	3	14.9	17.9	3.69	2837	7.91	A	3.9
	2500	2500	3500	3500	5000	1920	1920	2330	2330	3500	3400	12000	14000	580	3360	3930	3	15.4	18	3.57	2837	7.91	A	3.9
	2500	3500	3500	3500	3500	2040	2490	2490	2490	2490	2280	12000	14000	570	3260	3920	3	14.9	17.9	3.68	2837	7.91	A	3.9

1. EER and COP declared only for the purpose of tax deductions in force at the time of the creation of this catalog.
2. The above is the value for connecting with the following indoor units.
   - AR**KSPDBWKNEU
3. You can not connect a single unit.
4. Power consumption include indoor unit power.

3 Dimensional drawing

3-1. Outdoor units

1) AJ040/050FCJ2EH/EU

(Unit : mm)

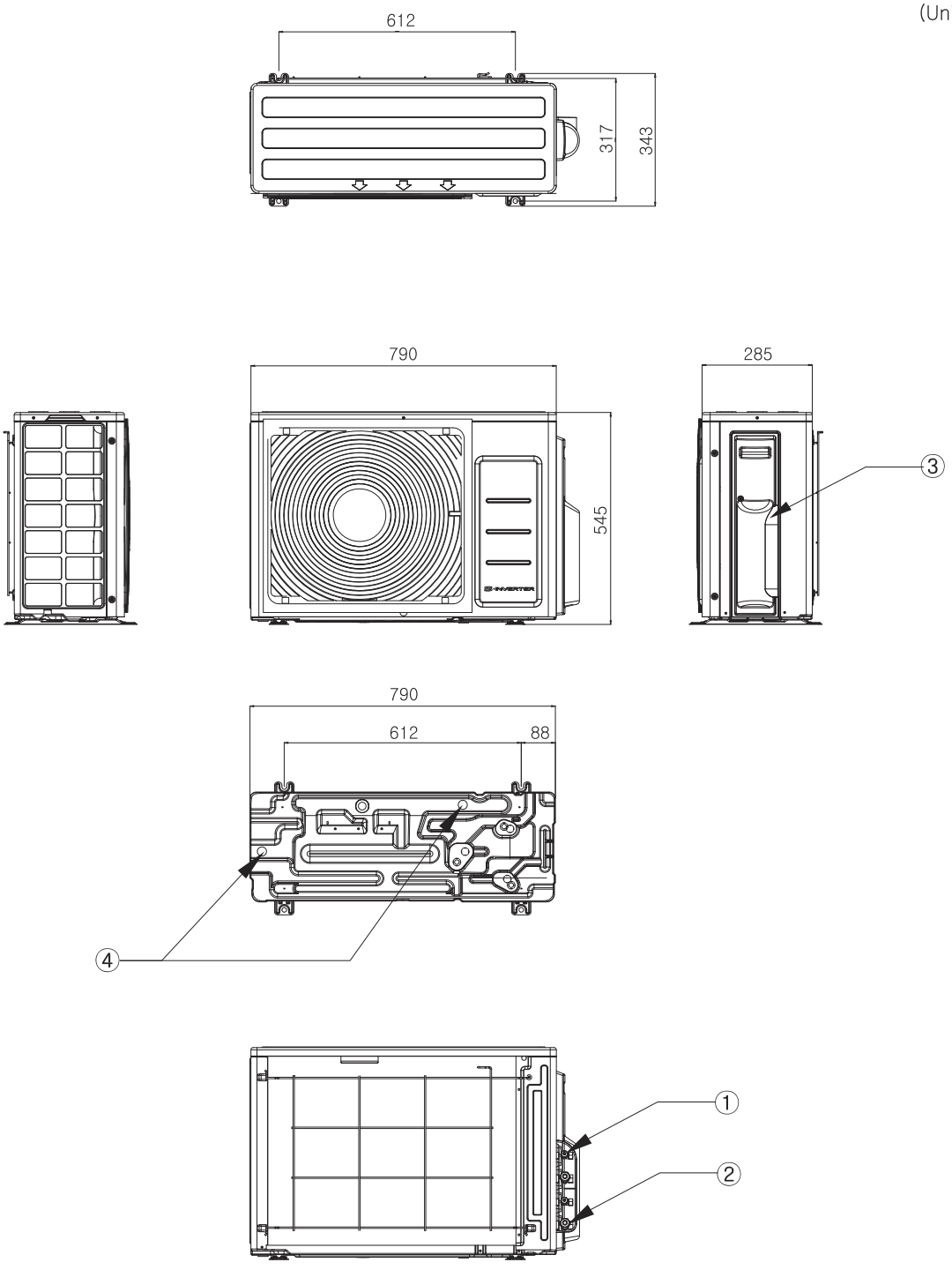

No.	Name	Description	
		4.0kW	5.0kW
①	Liquid pipe connection	Ø6.35(x 2) Flare	
②	Gas pipe connection	Ø9.52(x 2) Flare	Ø9.52, Ø12.7 Flare
③	Power & communication Wiring conduit	-	
④	Drain pipe	-	

2) AJ052FCJ3EH/EU

(Unit : mm)

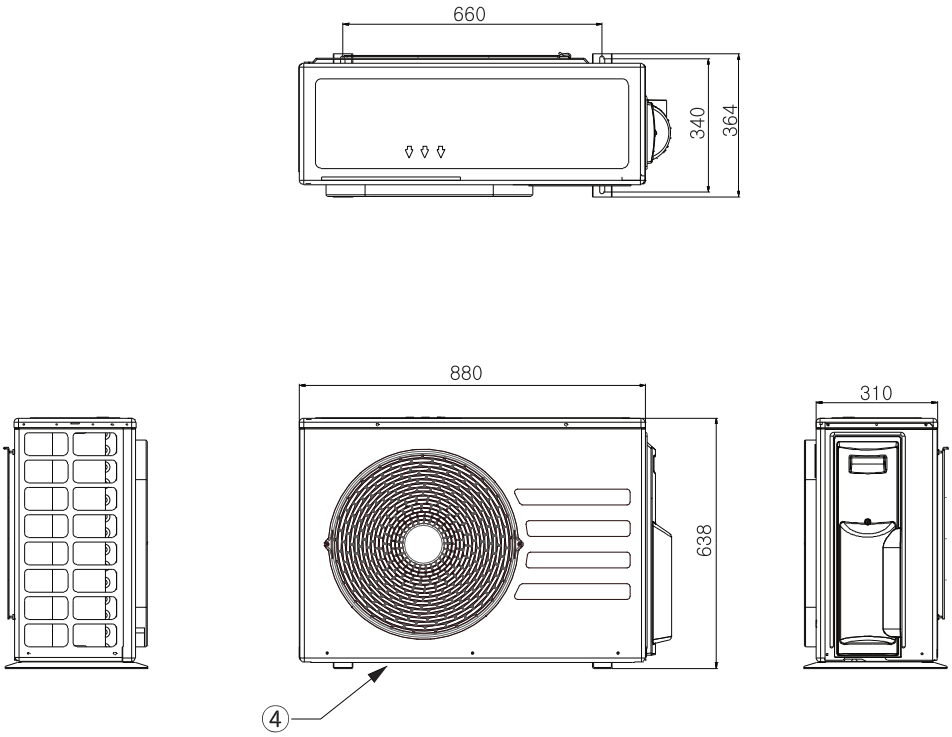

No.	Name	Description
		5.2kW
①	Liquid pipe connection	Ø6.35(x 3) Flare
②	Gas pipe connection	Ø9.52(x 2), Ø12.7 Flare
③	Power & communication Wiring conduit	-
④	Drain pipe	-

3 Dimensional drawing

3-1. Outdoor units

3) AJ068FCJ3EH/EU, AJ070/080FCJ4EH/EU

(Unit : mm)

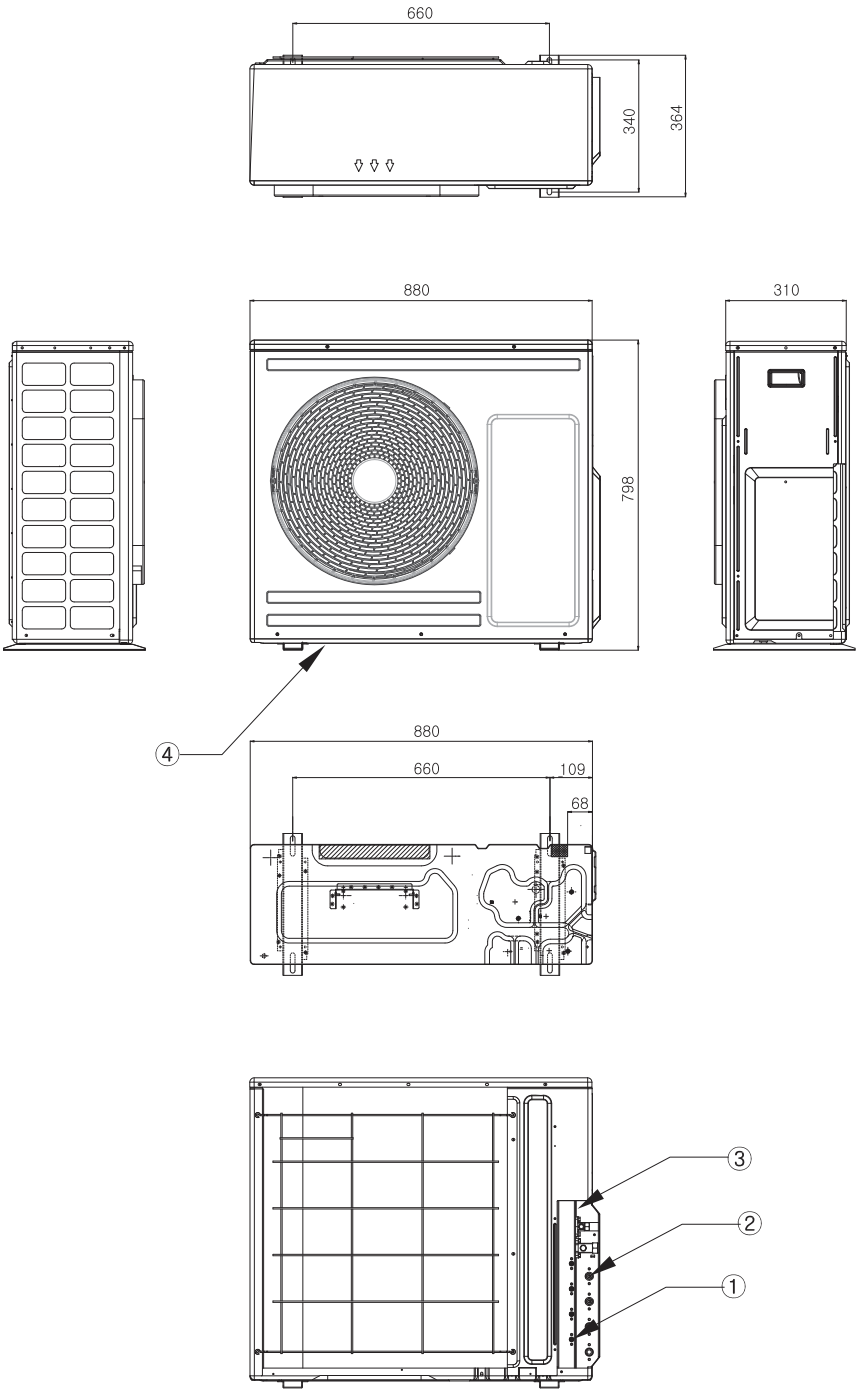

No.	Name	Description		
		6.0kW	7.0kW	8.0kW
①	Liquid pipe connection	Ø6.35(x 3) Flare	Ø6.35(x 4) Flare	
②	Gas pipe connection	Ø9.52(x 2), Ø12.7 Flare	Ø9.52(x2), Ø12.7(x 2) Flare	
③	Power & communication Wiring conduit	-		
④	Drain pipe	-		

4) AJ100FCJ5EH/EU

(Unit : mm)

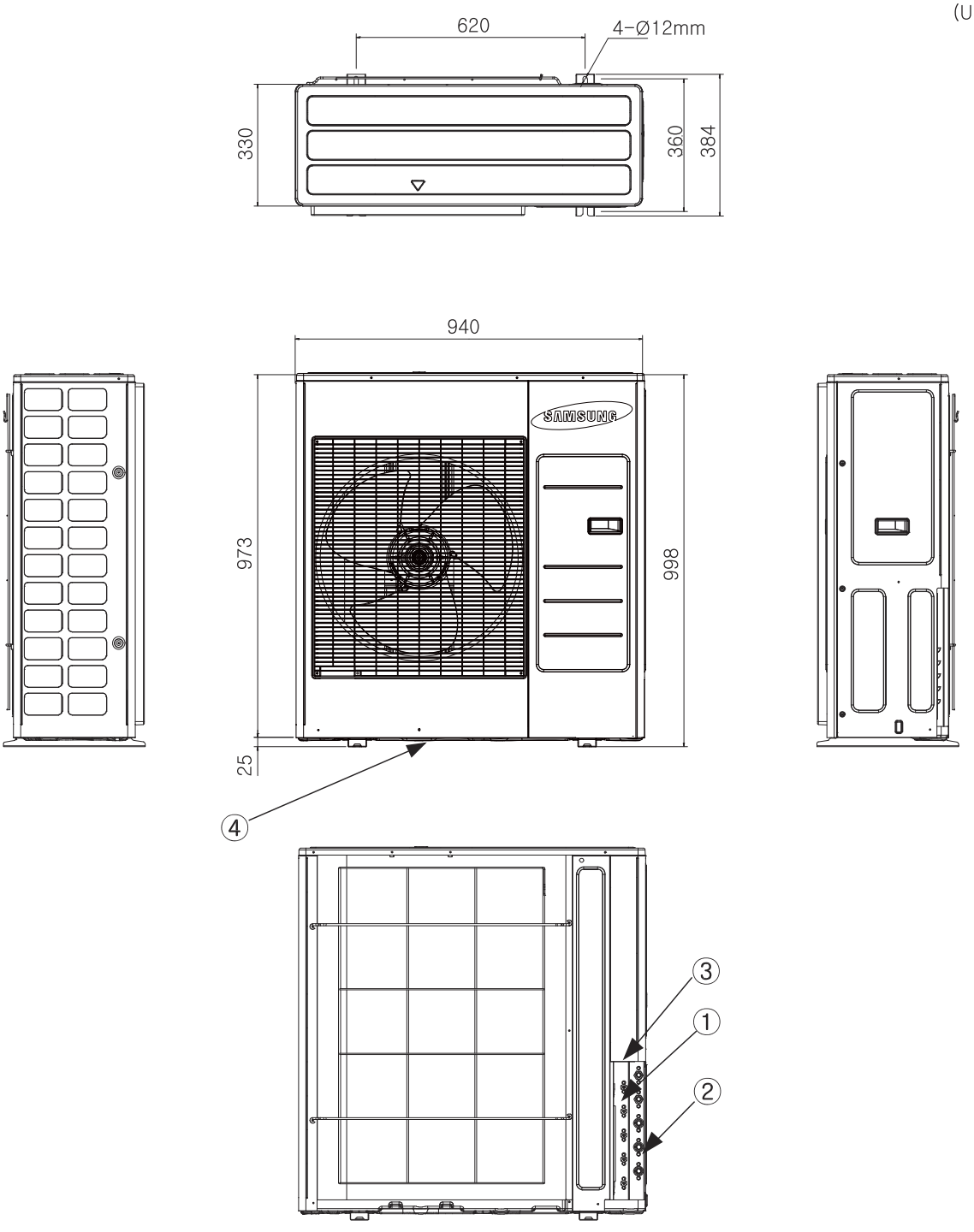

No.	Name	Description
		10.0kW
①	Liquid pipe connection	Ø6.35(x 5) Flare
②	Gas pipe connection	Ø9.52(x 2), Ø12.7(x 5) Flare
③	Power & communication Wiring conduit	-
④	Drain pipe	-

3 Dimensional drawing

3-2. Indoor units

1) Maldives - AR07/09/12KSFPEWQN**

Units : mm / inches

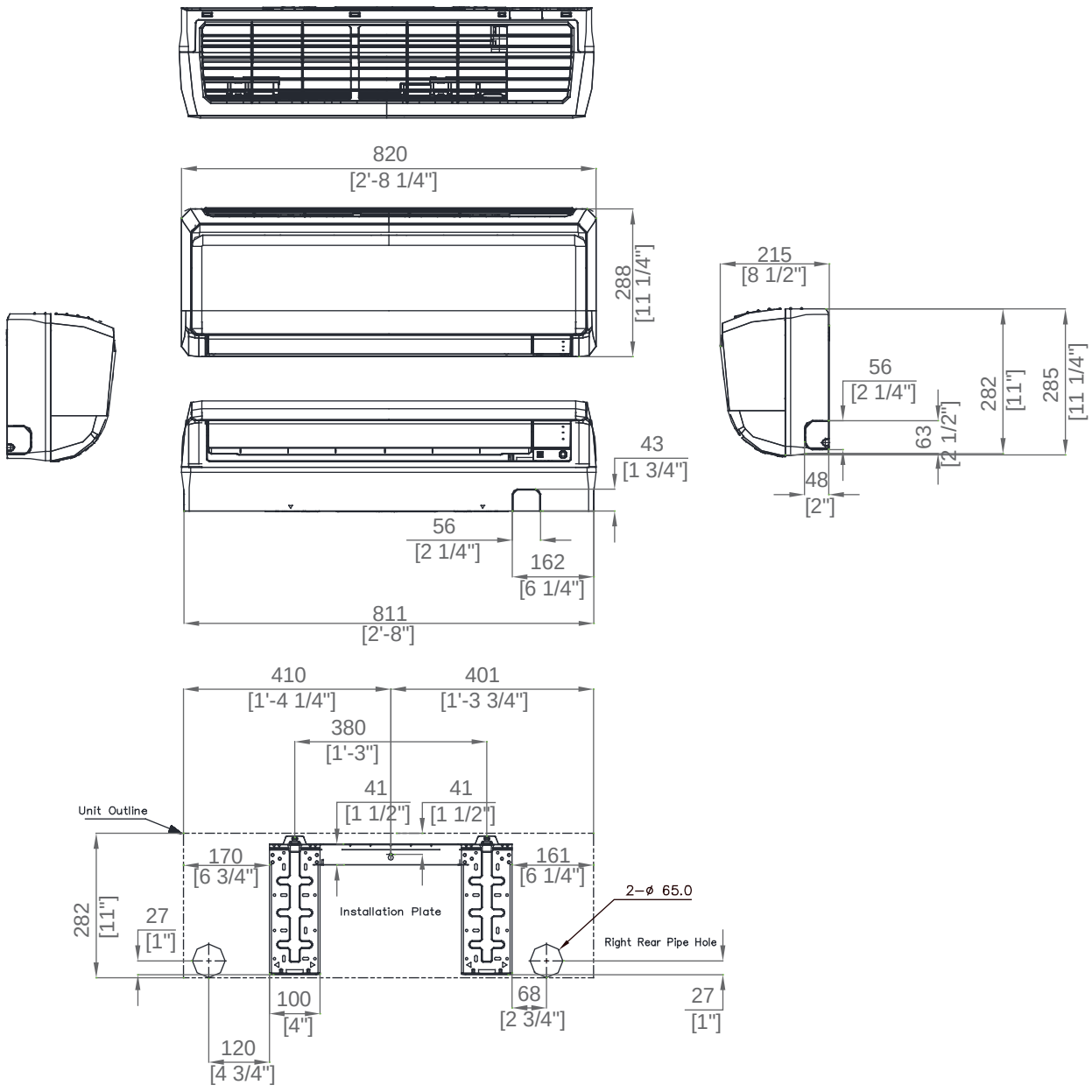

1) Maldives - AR18/24FSFPDGMN**

(Unit : mm)

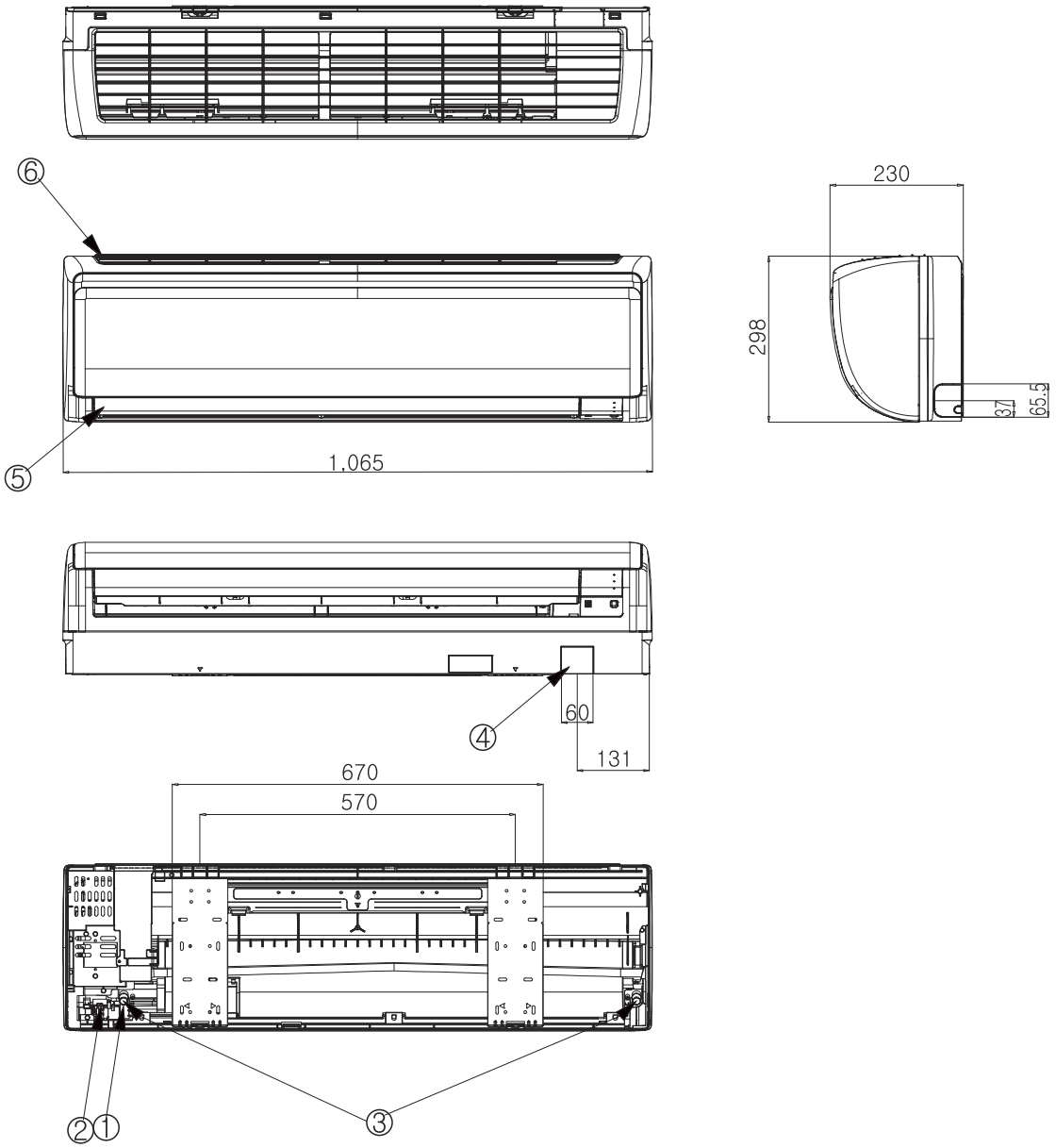

No.	Name	Description	
		5.0kW	6.8kW
①	Liquid pipe connection	Ø6.35 Flare	
②	Gas pipe connection	Ø12.70 Flare	Ø15.88 Flare
③	Drain pipe connection	ID 18Hose	
④	Conduit for power supply & communication wiring	-	-
⑤	Air inlet grille	-	-
⑥	Air outlet louver	-	-

3 Dimensional drawing

3-2. Indoor units

2) Slim 1way Cassette - MH026/035FSEA

(Unit : mm)

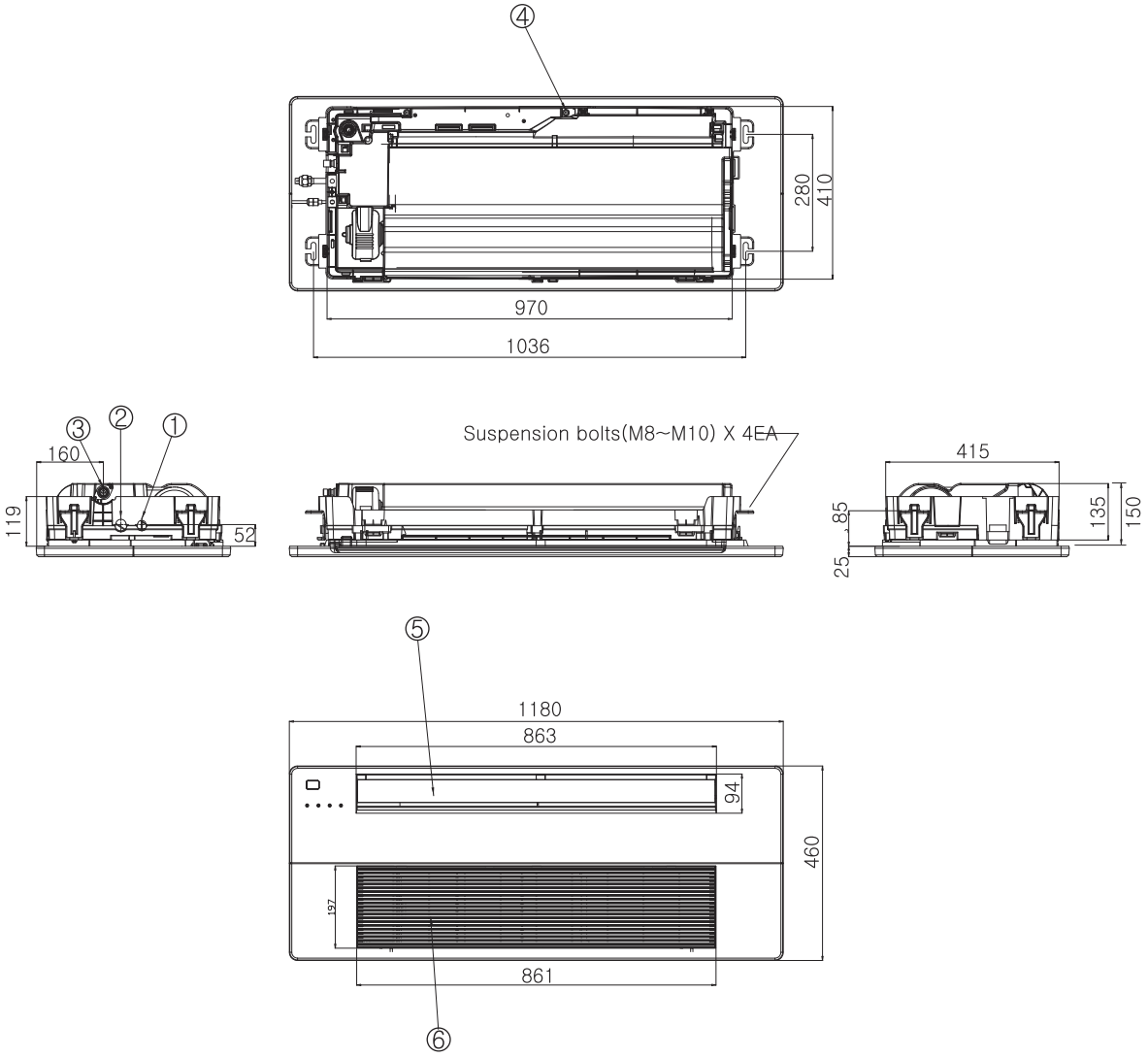

No.	Name	Description	
		2.6kW	3.5kW
①	Liquid pipe connection	Ø6.35 Flare	
②	Gas pipe connection	Ø9.52 Flare	
③	Drain pipe connection	VP20(OD 26, ID20)	
④	Conduit for power supply & communication wiring	-	
⑤	Air outlet louver	-	
⑥	Air inlet grille	-	
⑦	Panel model	PSSMA	

3 Dimensional drawing

3-2. Indoor units

3) 4Way Cassette (600x600) - AJN016/020/026/035/052NDEHA/EU

(Unit : mm)

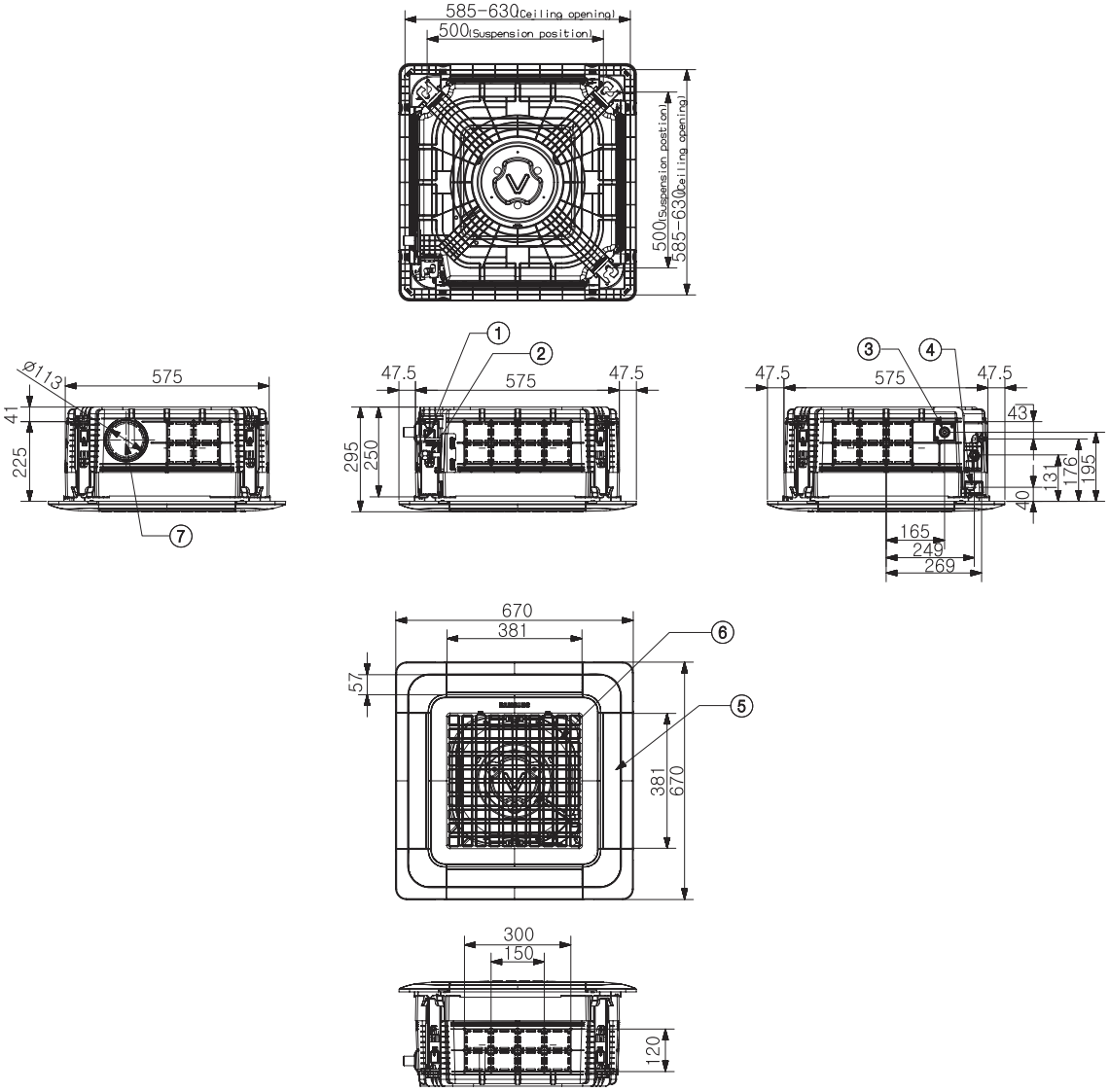

No.	Name	Description				
		1.6kW	2.0kW	2.6kW	3.5kW	5.2kW
①	Liquid pipe connection	Ø6.35 Flare				
②	Gas pipe connection	Ø9.52 Flare				Ø12.70 Flare
③	Drain pipe connection	VP25(OD 32, ID25)				
④	Conduit for power supply & communication wiring	-				
⑤	Air outlet louver	-				
⑥	Air inlet grille	-				
⑦	Fresh air intake	Ø100				

3 Dimensional drawing

3-2. Indoor units

4) Slim Duct - NJ026/035LHXEA

(Unit : mm)

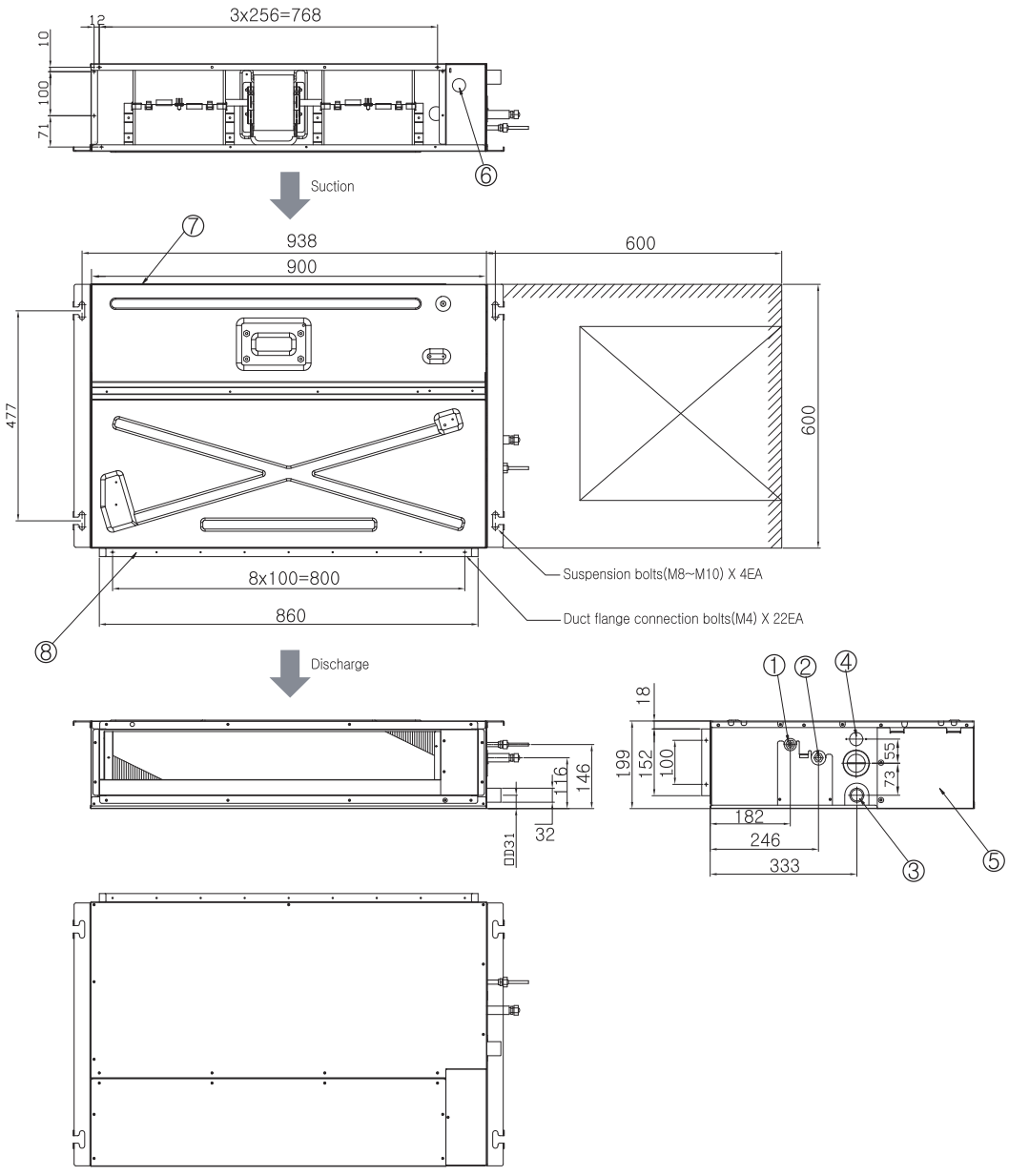

No.	Name	Description	
		2.6kW	3.5kW
①	Liquid pipe connection	Ø6.35 Flare	
②	Gas pipe connection	Ø9.52 Flare	
③	Drain pipe connection without optional drain pump kits	VP25(OD 32, ID25)	
④	Drain pipe connection with optional drain pump kits	-	
⑤	Control unit	-	
⑥	Conduit for power supply & communication wiring	-	
⑦	Return air side	-	
⑧	Air outlet duct flange	-	

3 Dimensional drawing

3-2. Indoor units

5) MSP Duct - MH052FUEA

(Unit : mm)

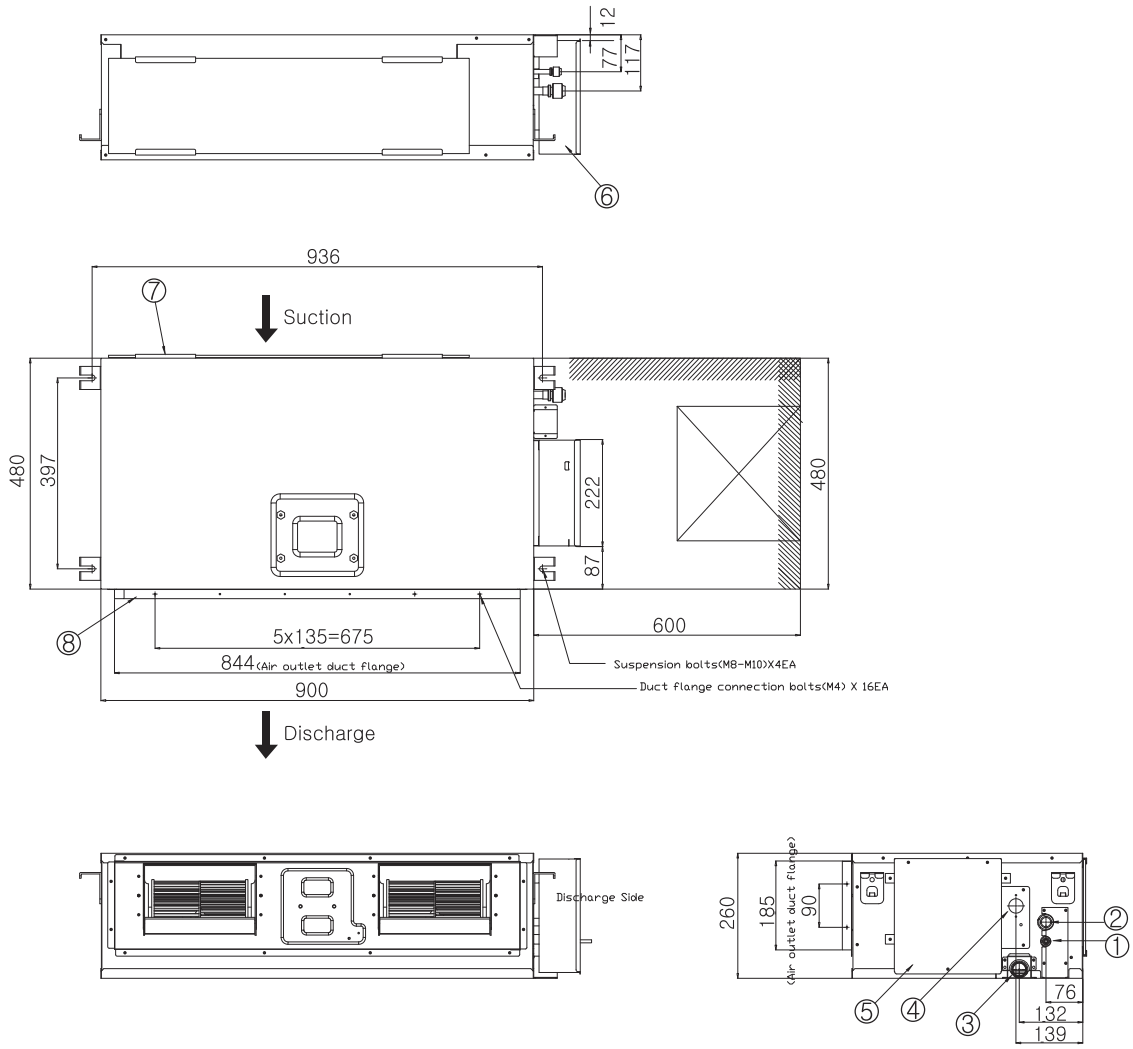

No.	Name	Description
		5.2kW
①	Liquid pipe connection	Ø6.35 Flare
②	Gas pipe connection	Ø12.70 Flare
③	Drain pipe connection without optional drain pump kits	VP25(OD 32, ID25)
④	Drain pipe connection with optional drain pump kits	-
⑤	Control unit	-
⑥	Conduit for power supply & communication wiring	-
⑦	Return air side	-
⑧	Air outlet duct flange	-

3 Dimensional drawing

3-2. Indoor units

6) Console - MH026/035/052FJEA

(Unit : mm)

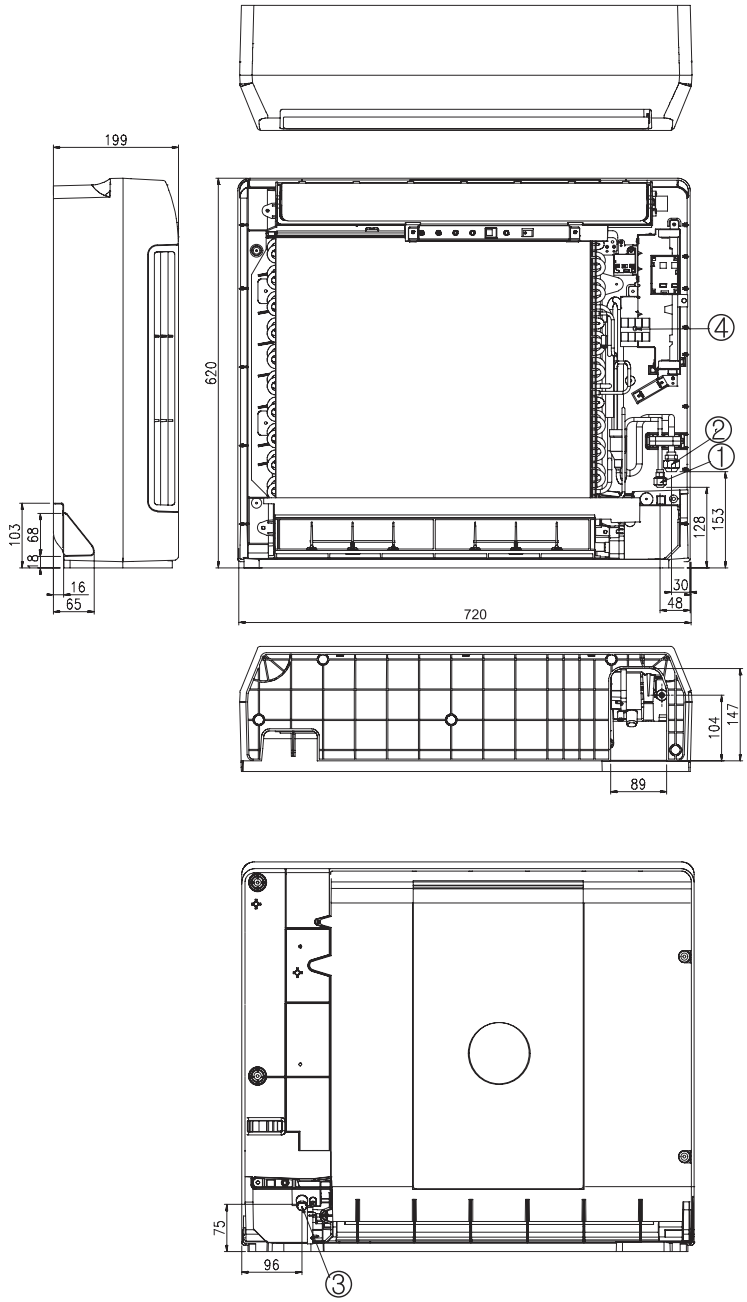

No.	Name	Description	
		2.6kW / 3.5kW	5.2kW
①	Liquid pipe connection	Ø6.35 Flare	
②	Gas pipe connection	Ø9.52 Flare	Ø12.70 Flare
③	Drain pipe connection	ID 18Hose	
④	Conduit for power supply & communication wiring	-	

3 Dimensional drawing

3-2. Indoor units

7) AR9570 - AR09/12JSPFBWKN**

Units : mm / inches

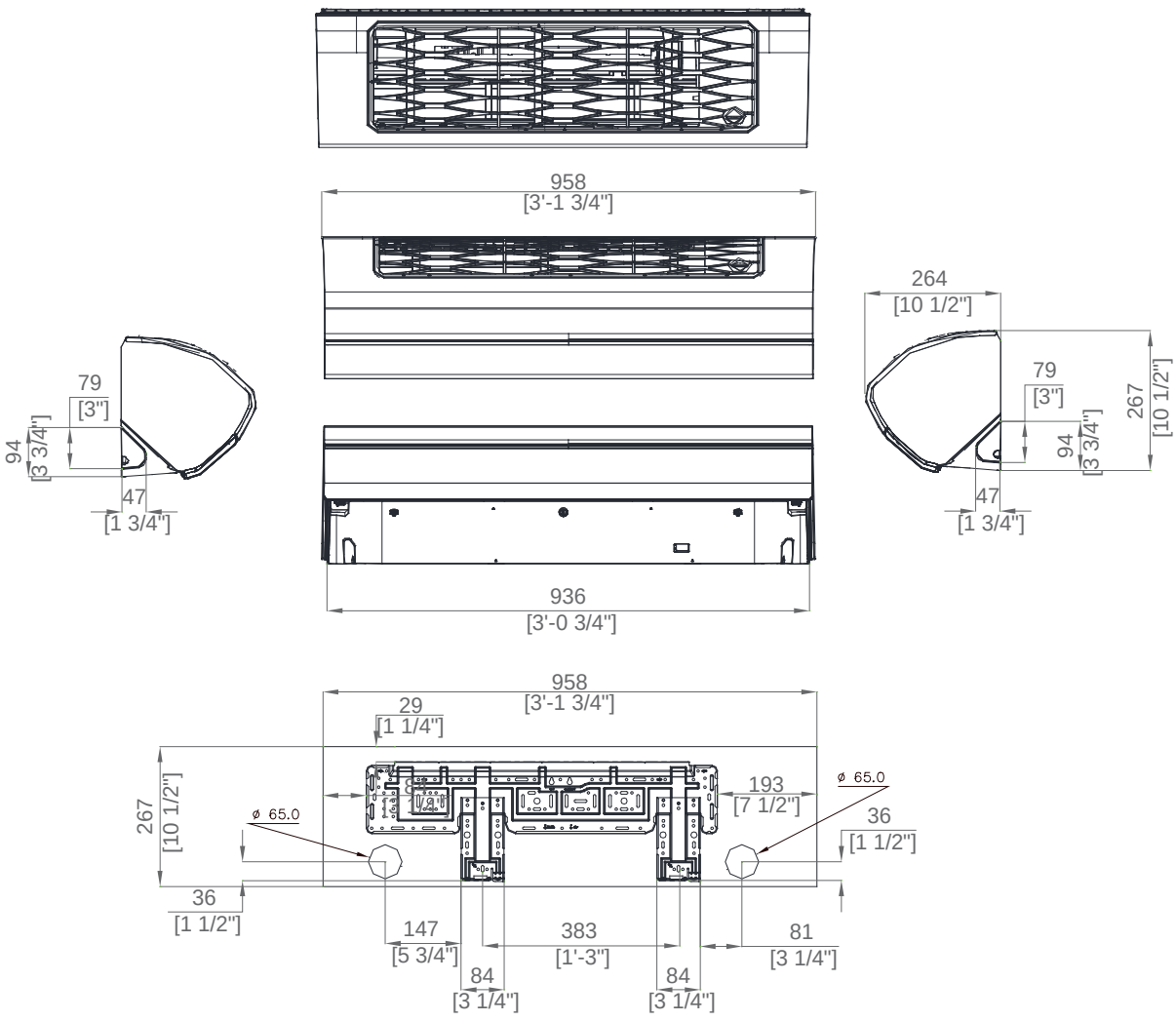

3 Dimensional drawing

3-2. Indoor units

8) AR7580 - AR07/09/12KSPDBWKN**

Units : mm / inches

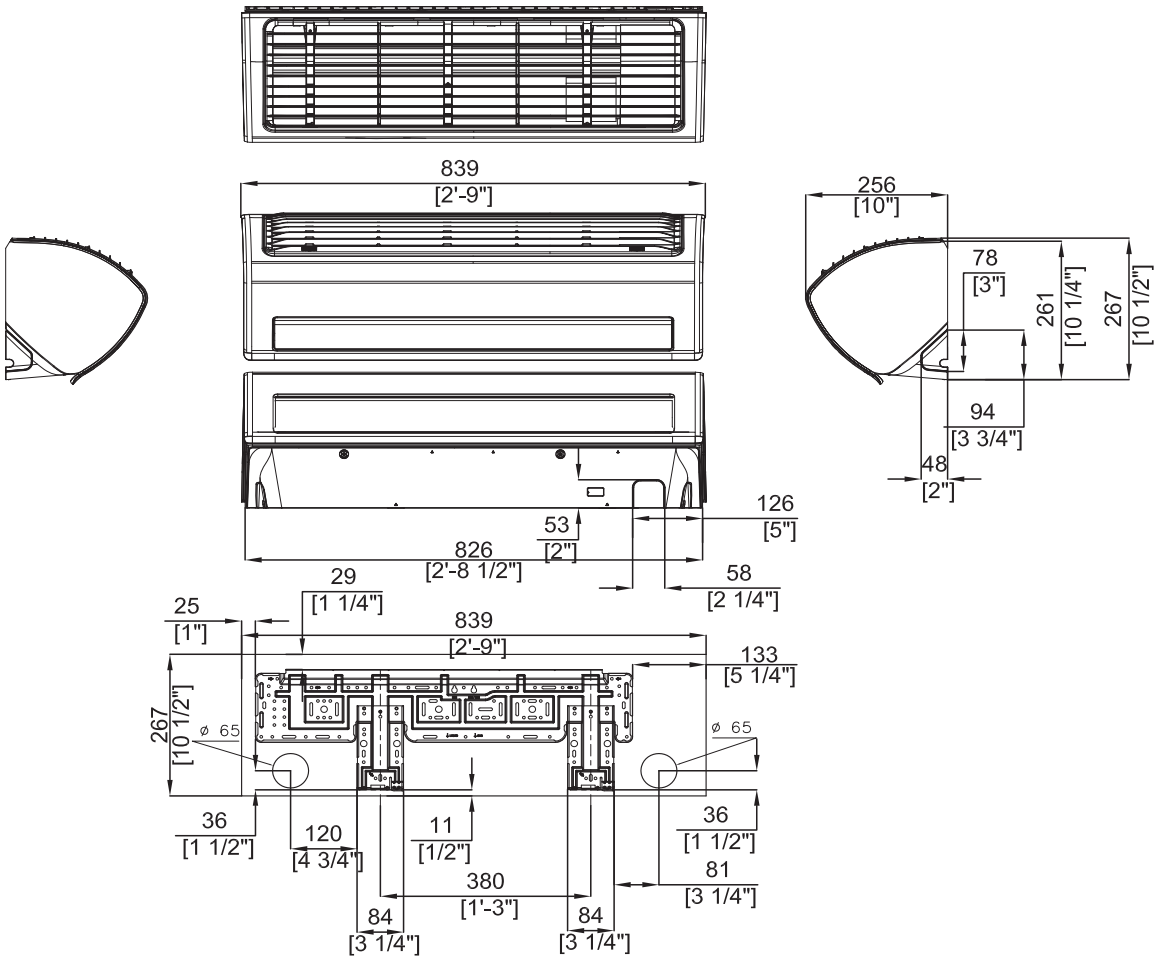

3 Dimensional drawing

3-2. Indoor units

8) AR7580 - AR18/24KSPDBWKN**

Units : mm / inches

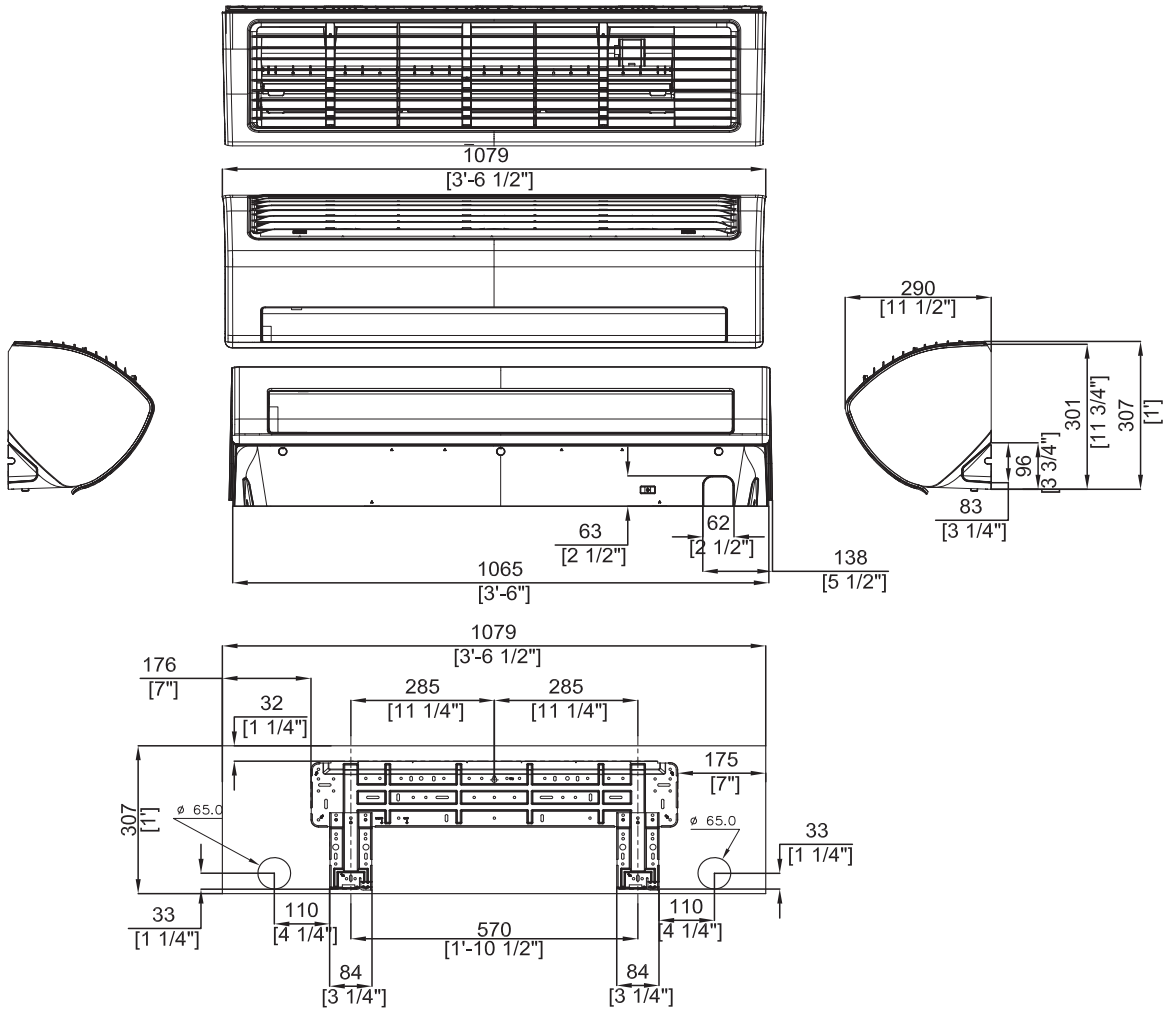

3 Dimensional drawing

3-2. Indoor units

9) AR5680 - AR07/09/12KSWNAWKN**

Units : mm / inches

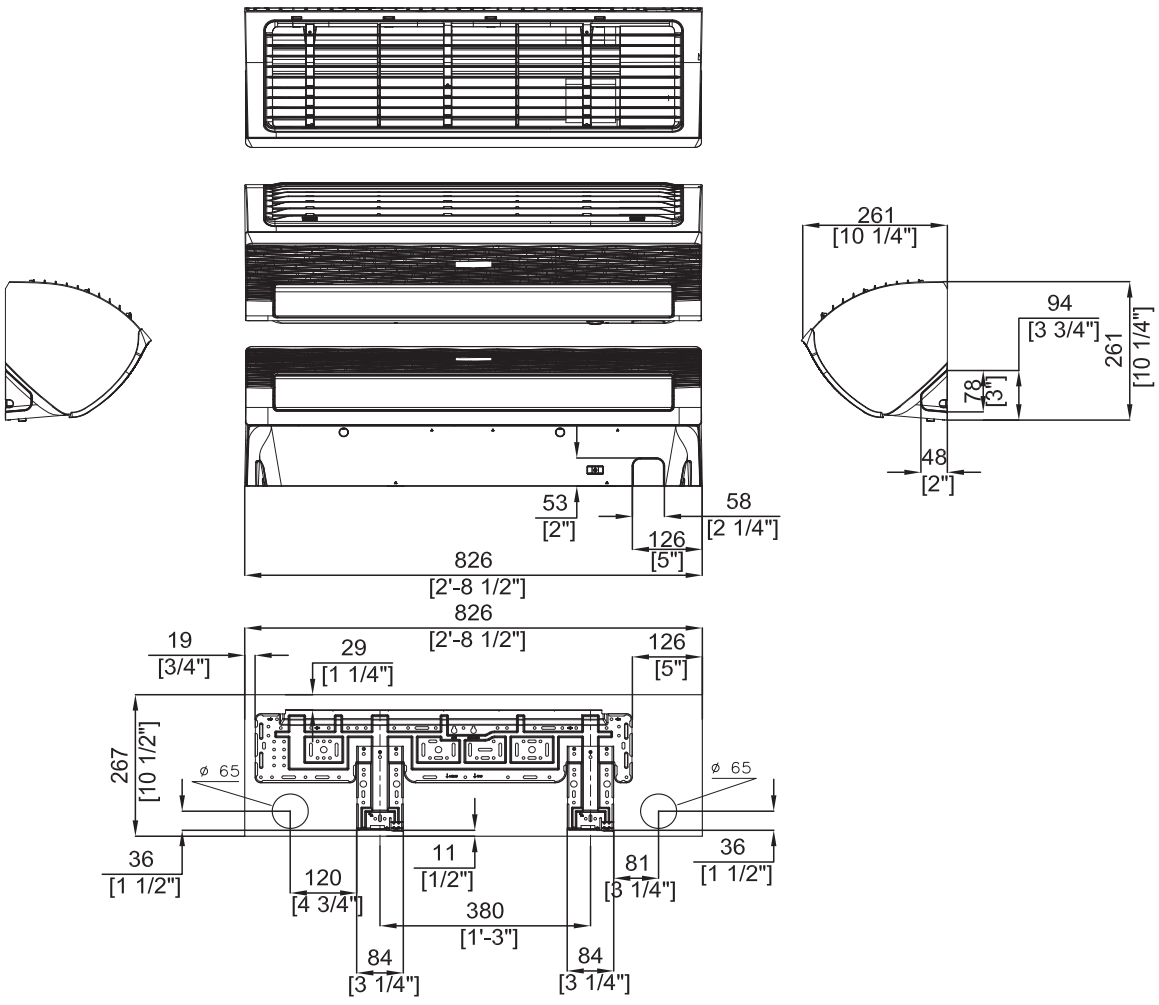

3 Dimensional drawing

3-2. Indoor units

9) AR5680 - AR18/24KSWNAWKN**

Units : mm / inches

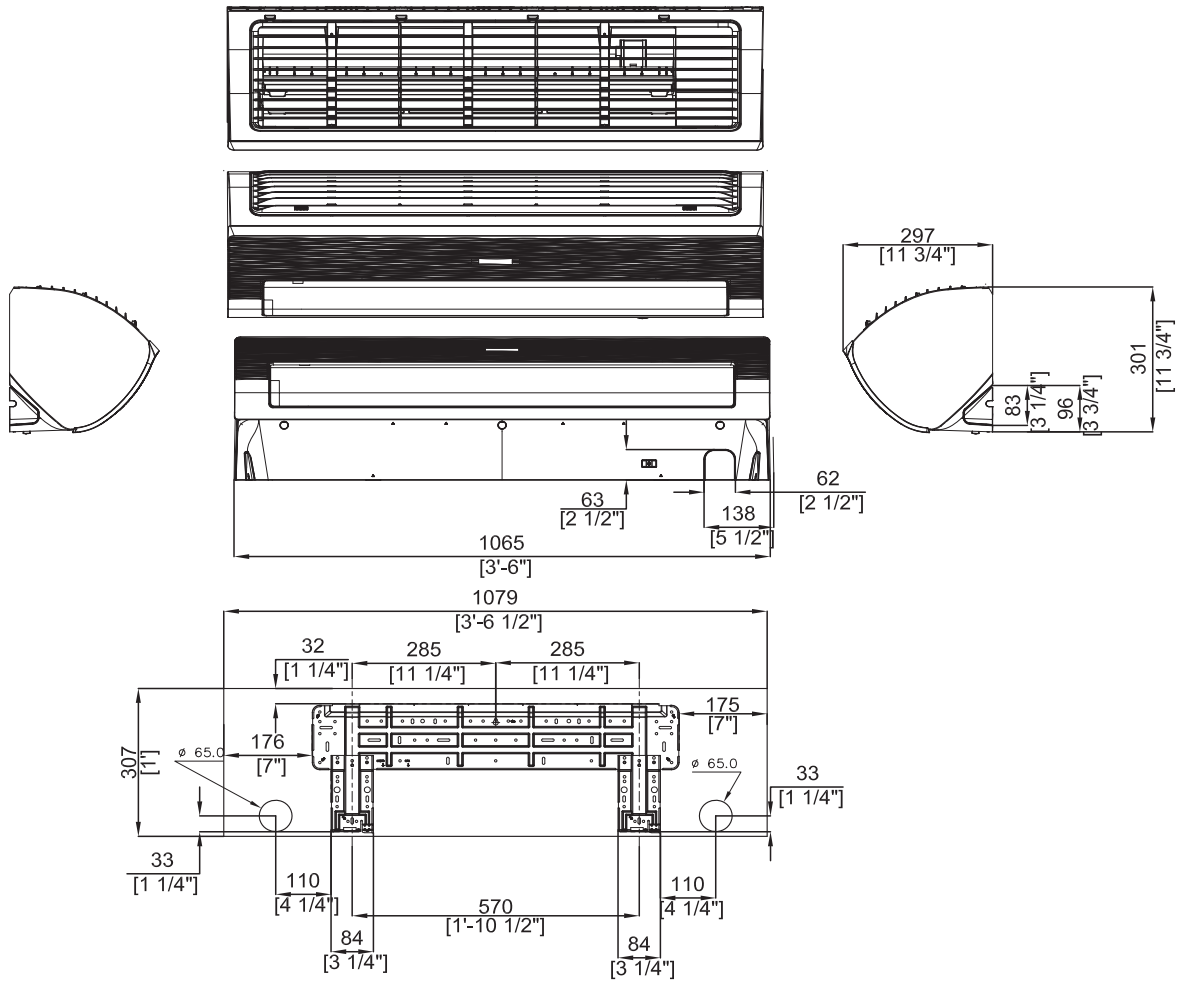

3 Dimensional drawing

3-2. Indoor units

10) AR5580 - AR07KSWSAWKN**, AR09/12KSWSBWKN**

Units : mm / inches

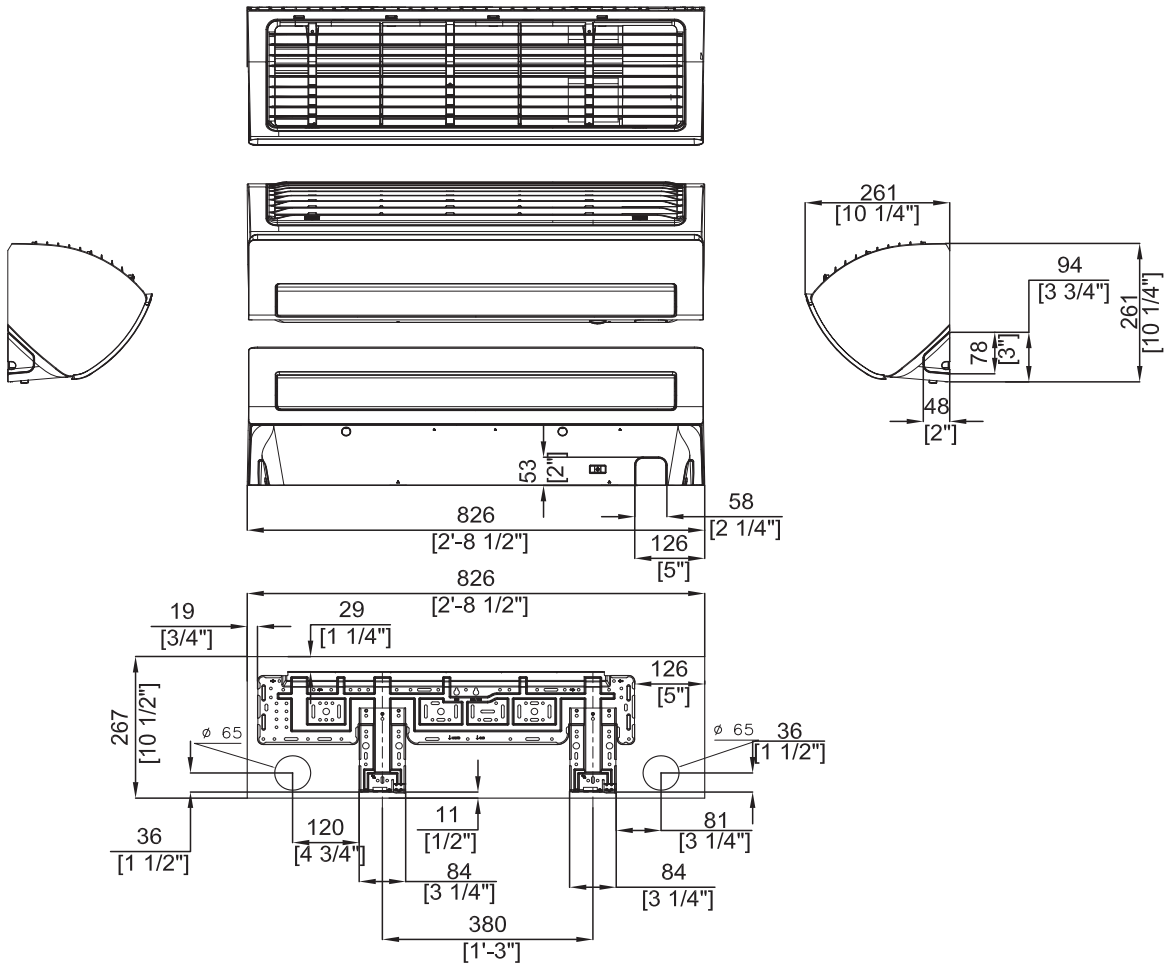

3 Dimensional drawing

3-2. Indoor units

10) AR5580 - AR18/24KSWSAWKN**

Units : mm / inches

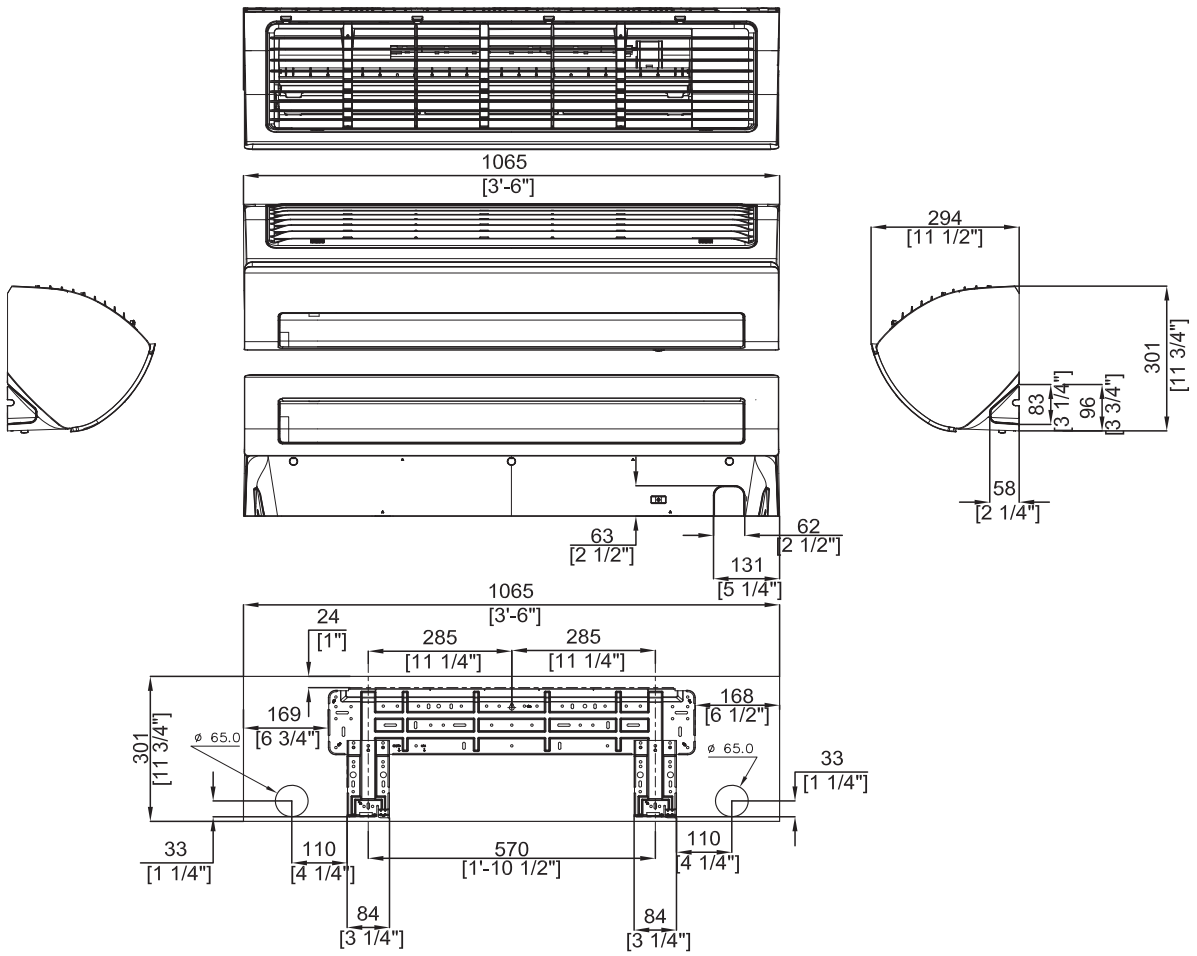

3 Dimensional drawing

3-2. Indoor units

11) New Boracay - AR07/09/12KSFHBWKN**

Units : mm / inches

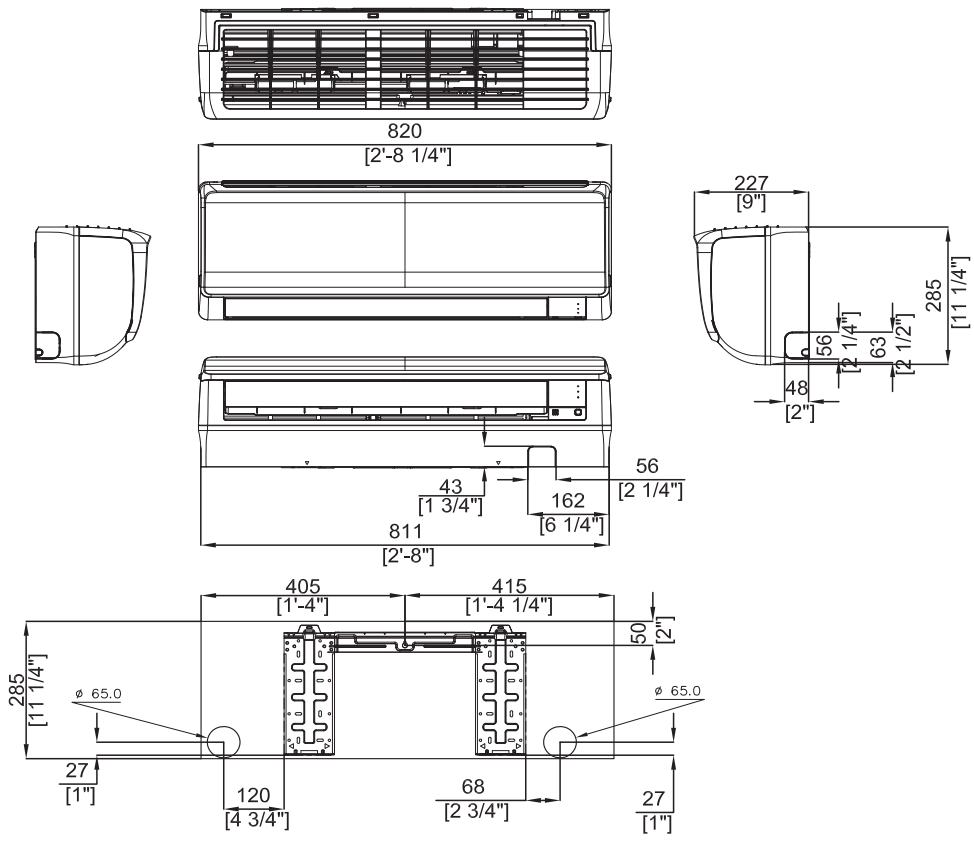

3 Dimensional drawing

3-2. Indoor units

11) New Boracay - AR18/24KSFHBWKN**

Units : mm / inches

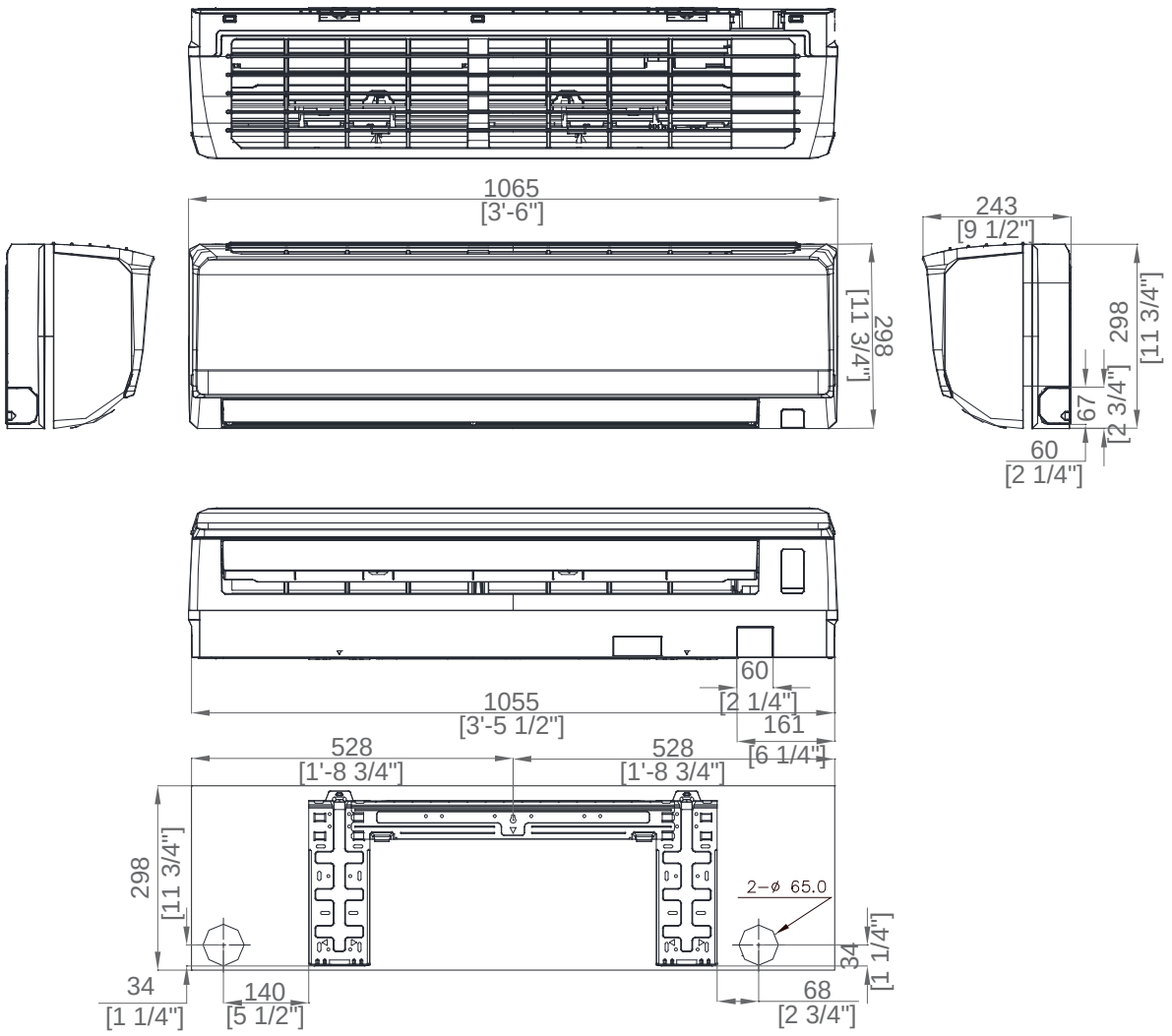

4 Electrical wiring diagram

4-1. Outdoor units

1) AJ040/050FCJ2EH/EU

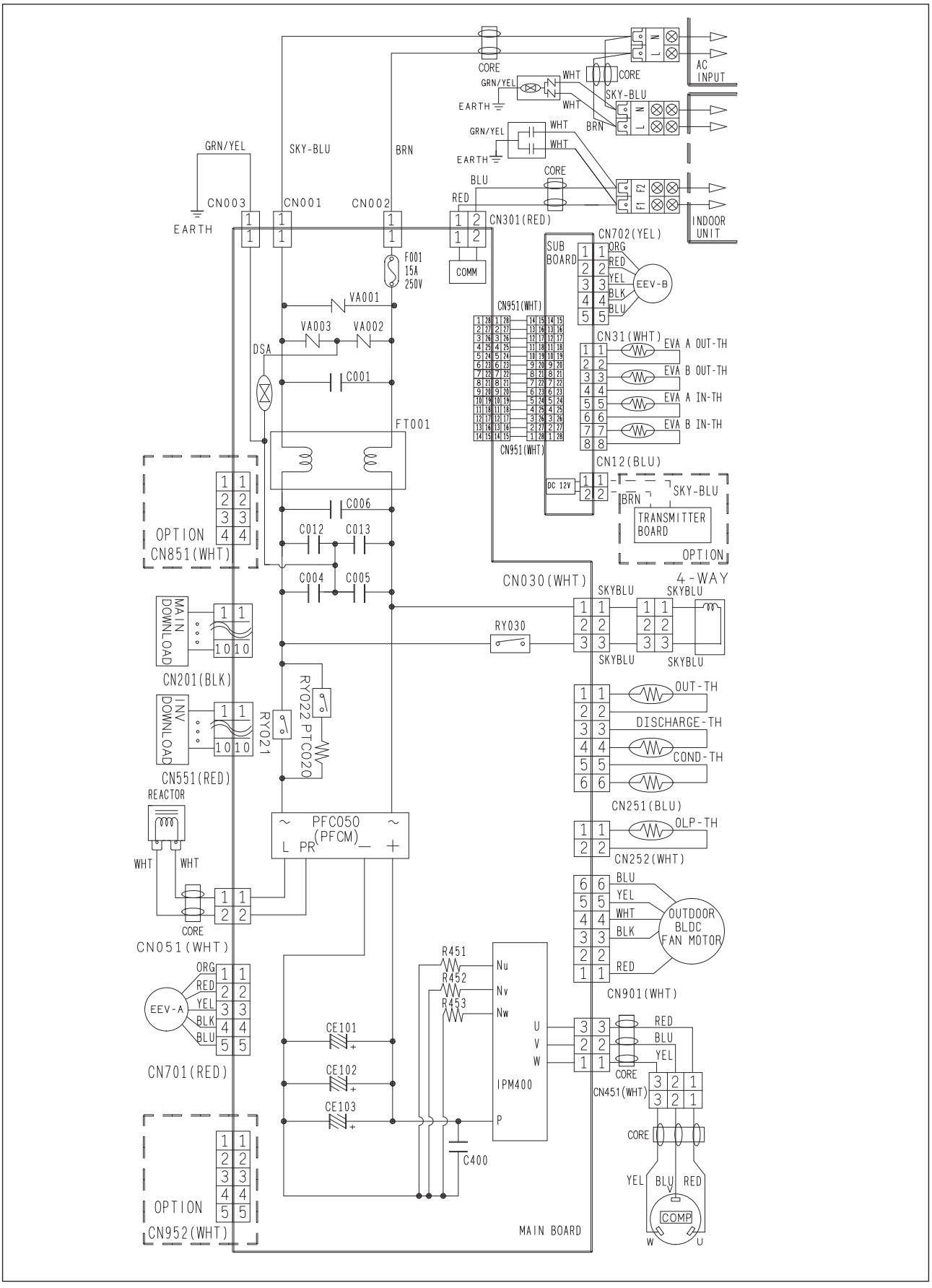

2) AJ052/068FCJ3EH/EU

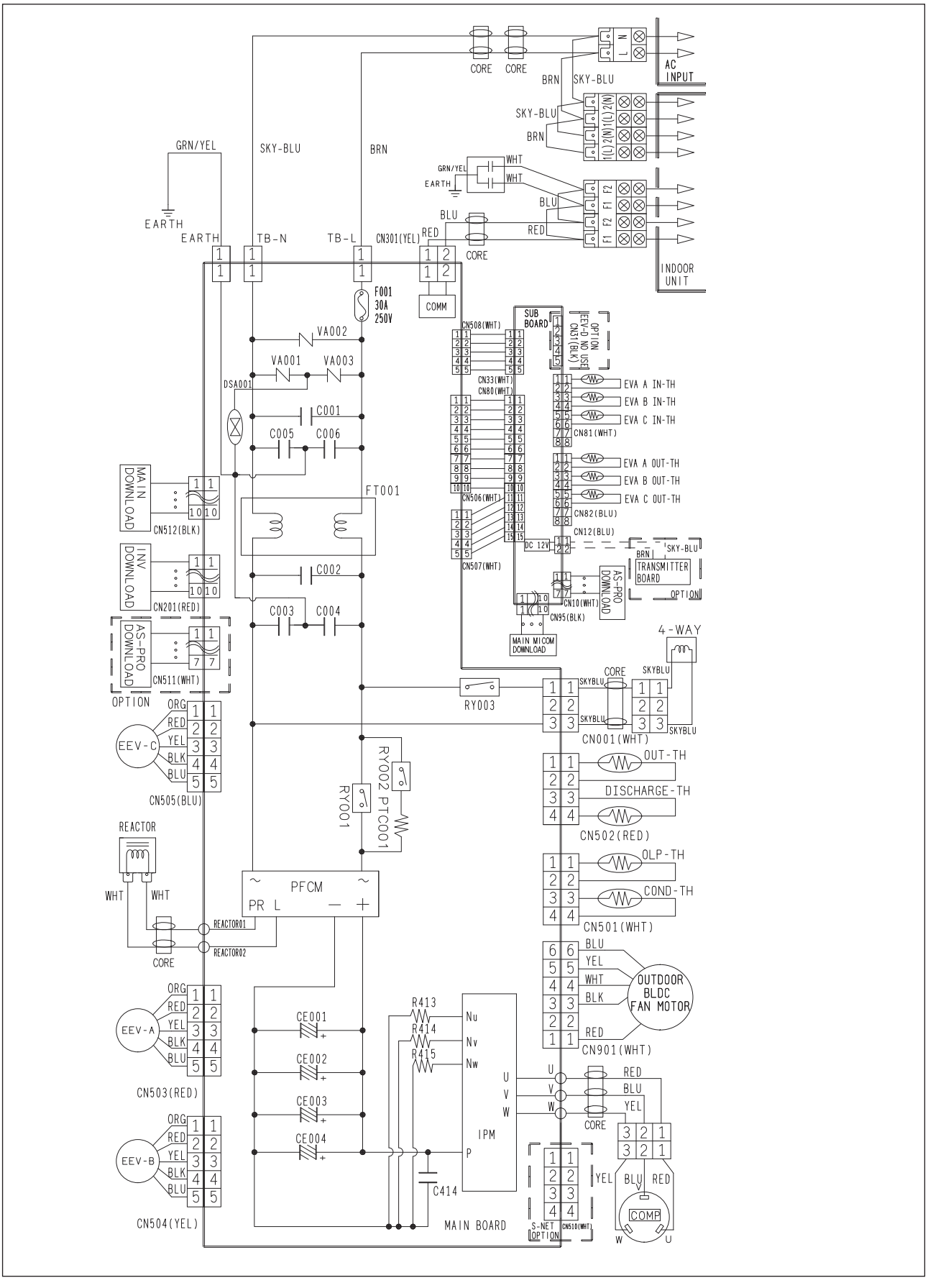

4 Electrical wiring diagram

4-1. Outdoor units

3) AJ070/080FCJ4EH/EU

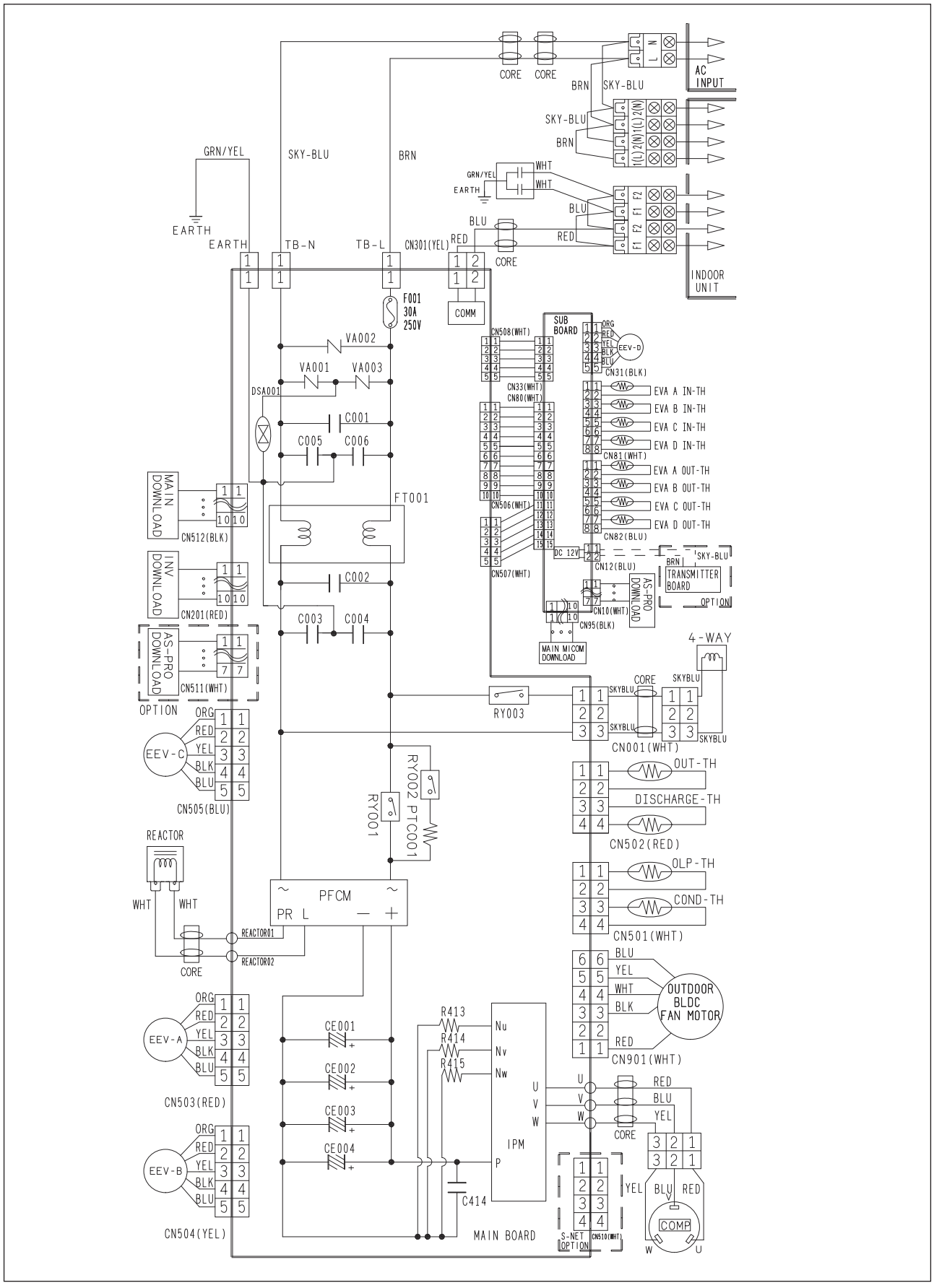

4) AJ100FCJ5EH/EU

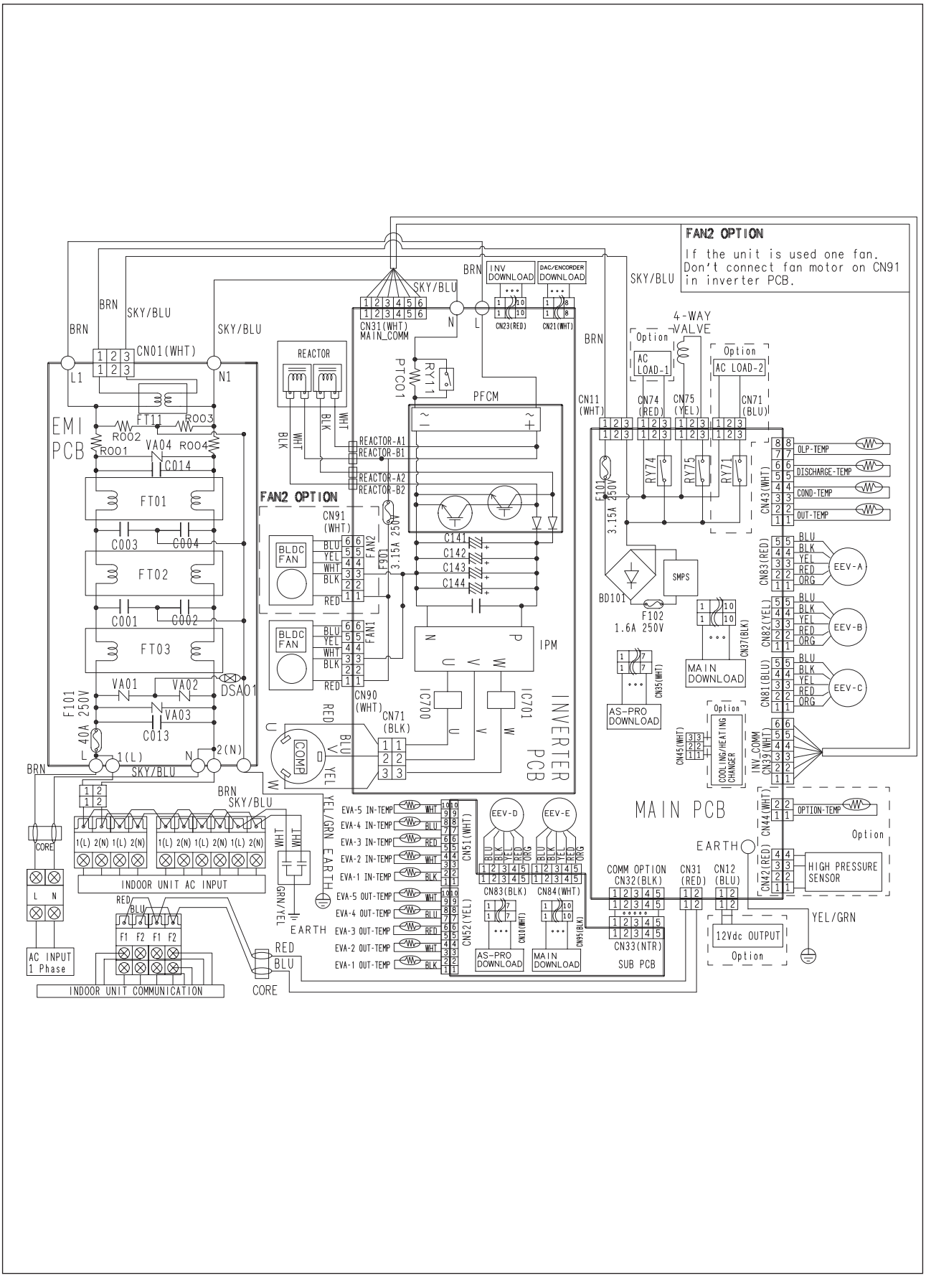

4 Electrical wiring diagram

4-2. Indoor units

1) Maldives - AR07/09/12KSFPEWQN**

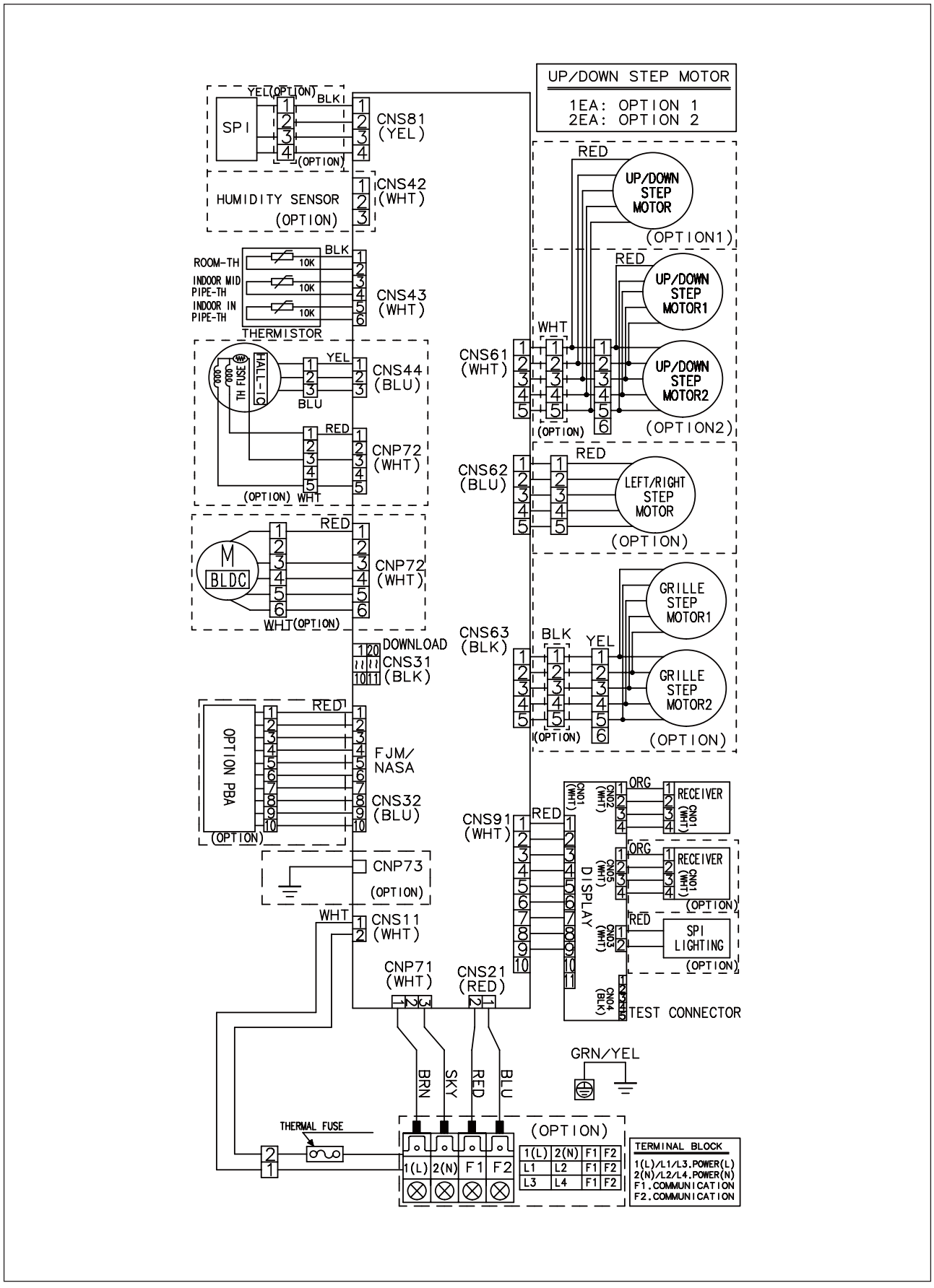

1) Maldives - AR18/24FSFPDGMN

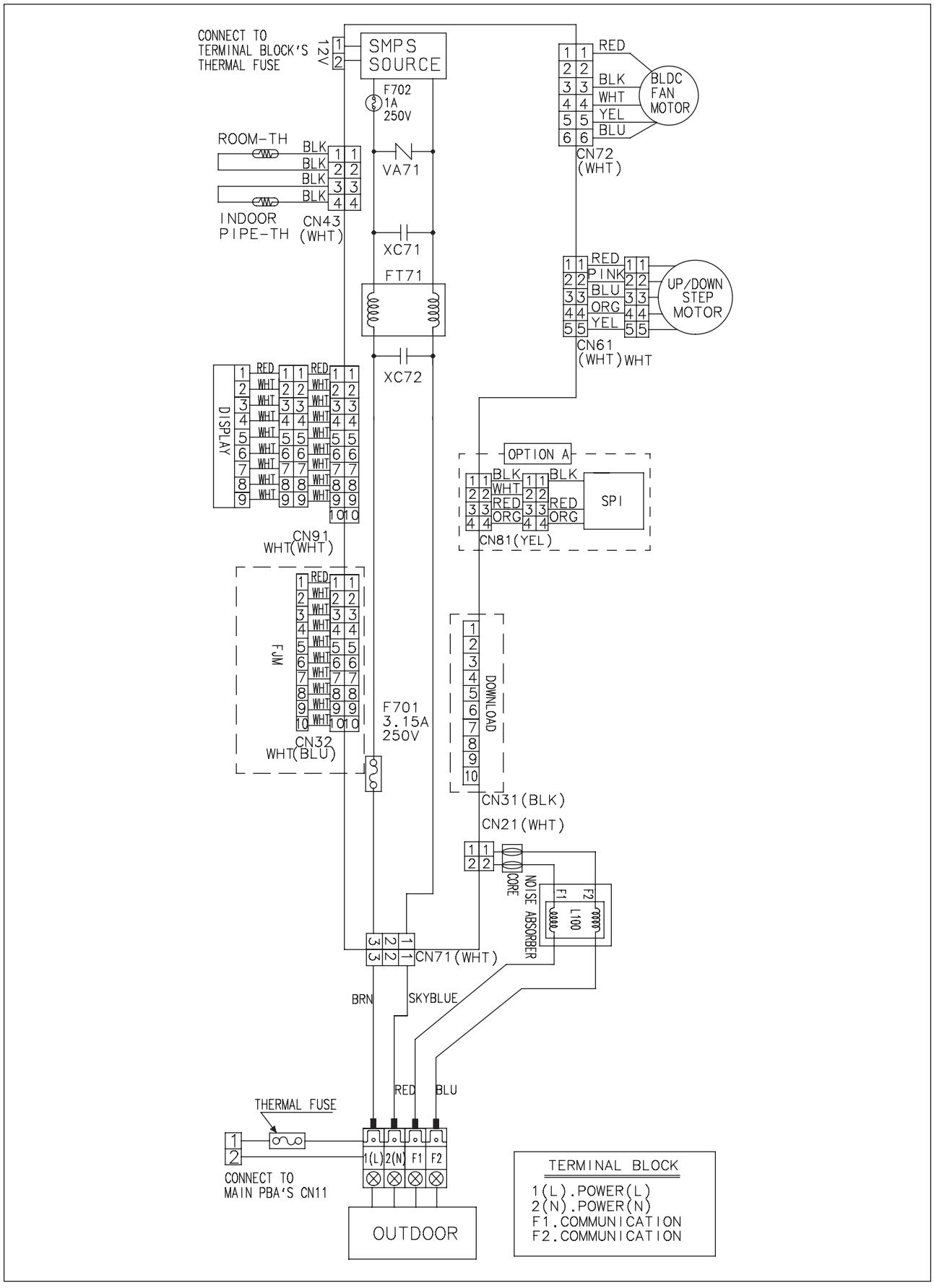

4 Electrical wiring diagram

4-2. Indoor units

2) Slim 1way Cassette - MH026/035FSEA

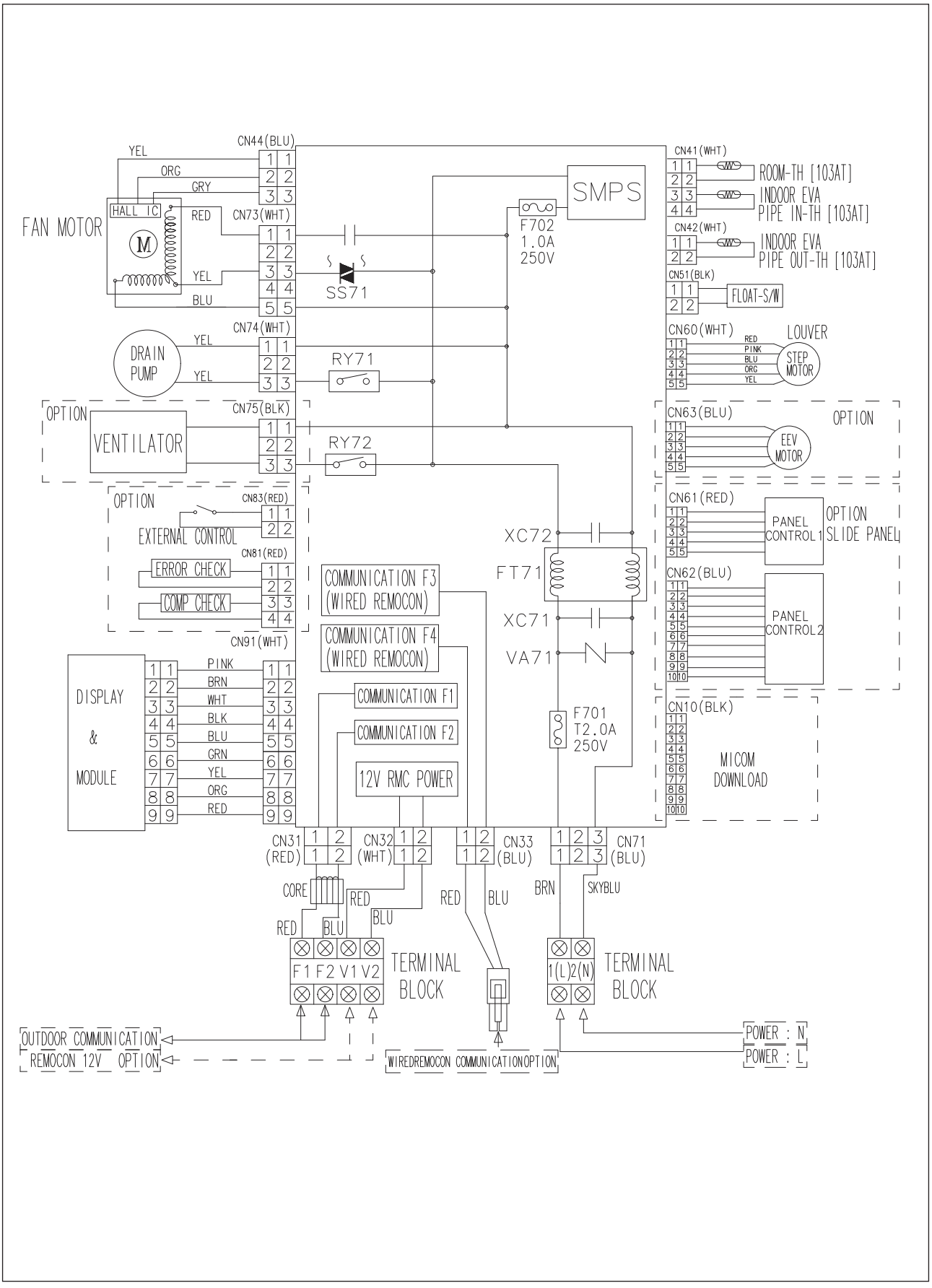

4 Electrical wiring diagram

4-2. Indoor units

3) 4Way Cassette (600x600) - AJN016/020/026/035/052NDEHA/EU

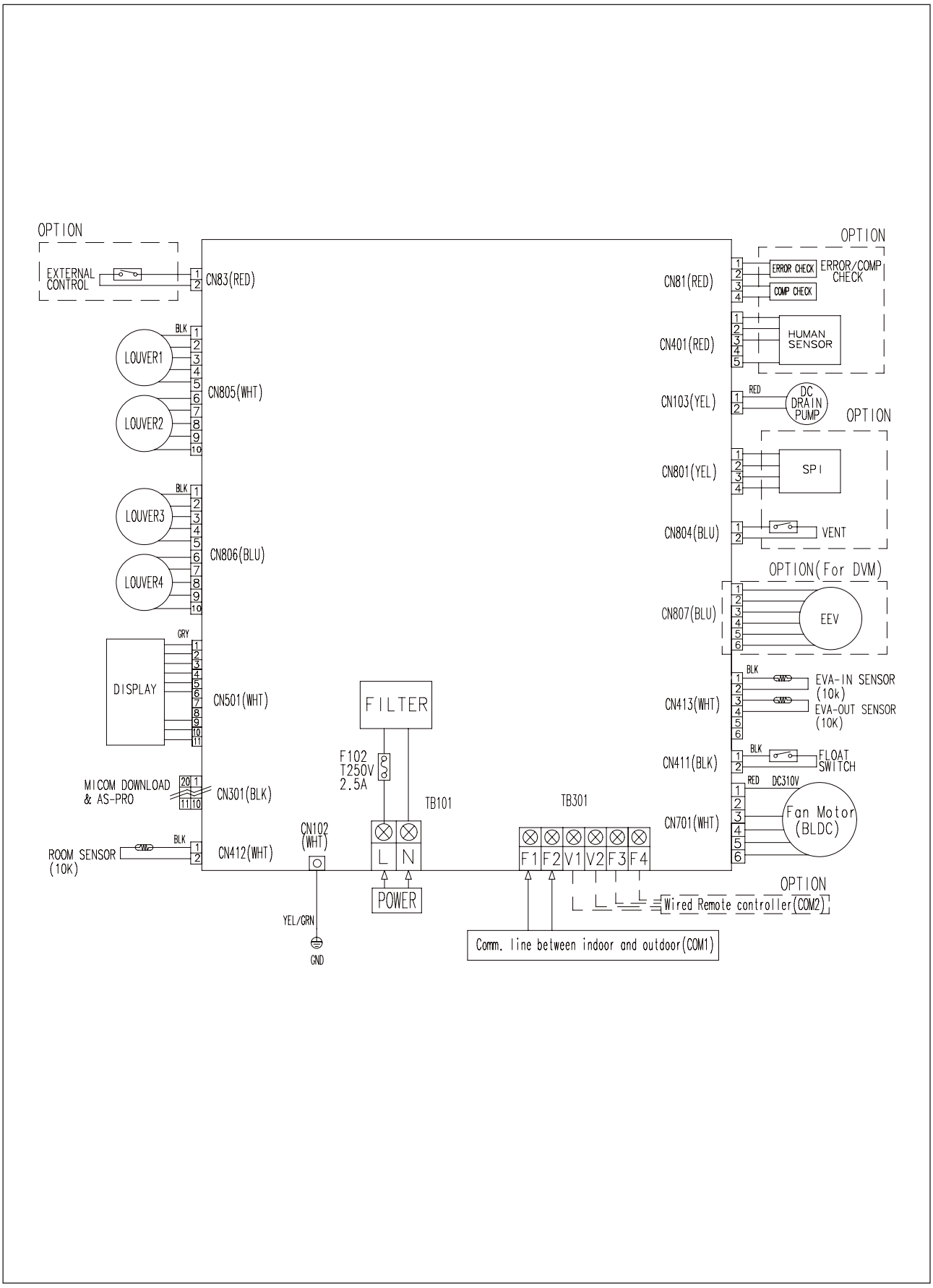

4 Electrical wiring diagram

4-2. Indoor units

4) Slim Duct - NJ026/035LHXEA

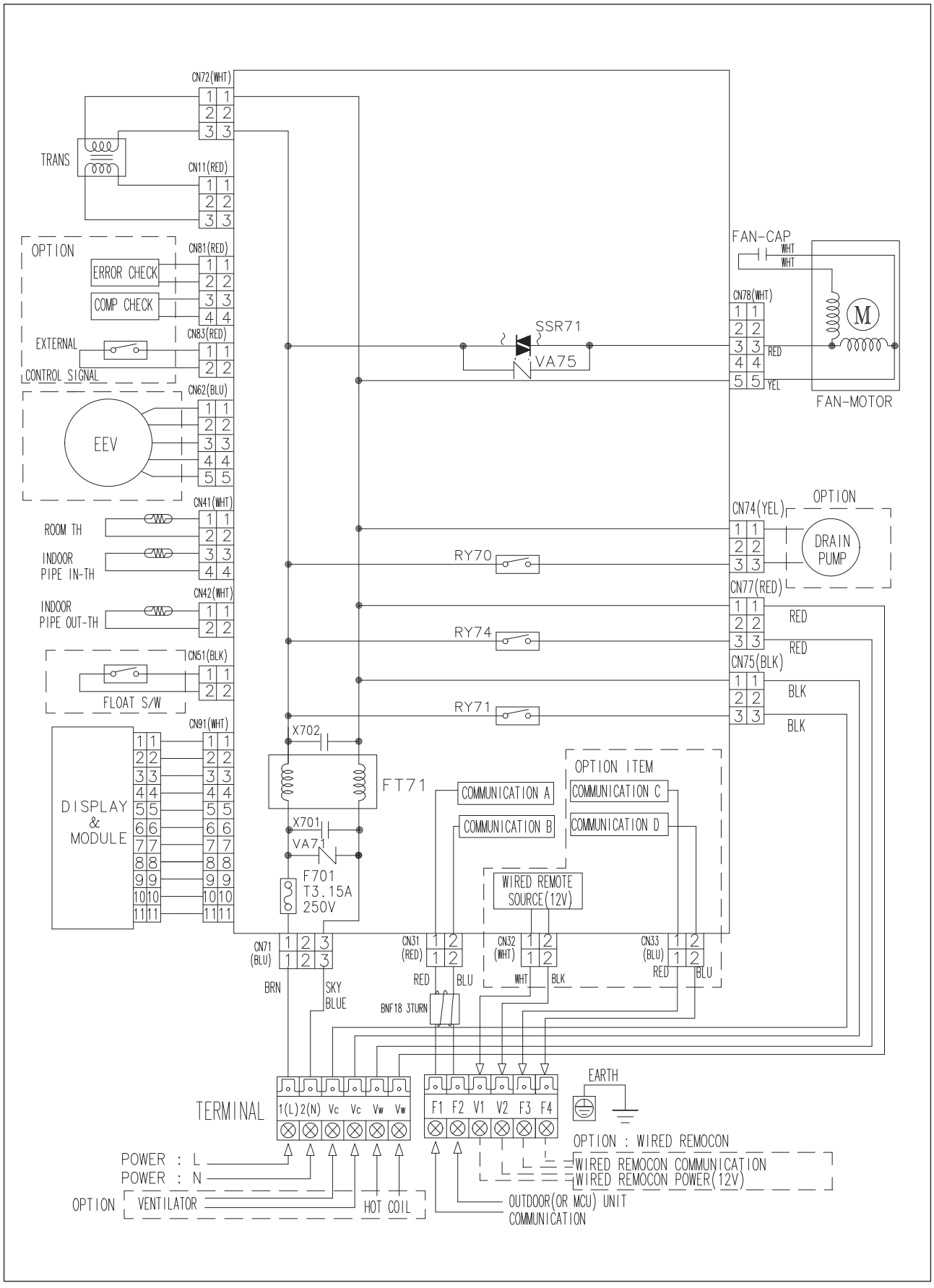

4 Electrical wiring diagram

4-2. Indoor units

5) MSP Duct - MH052FUEA

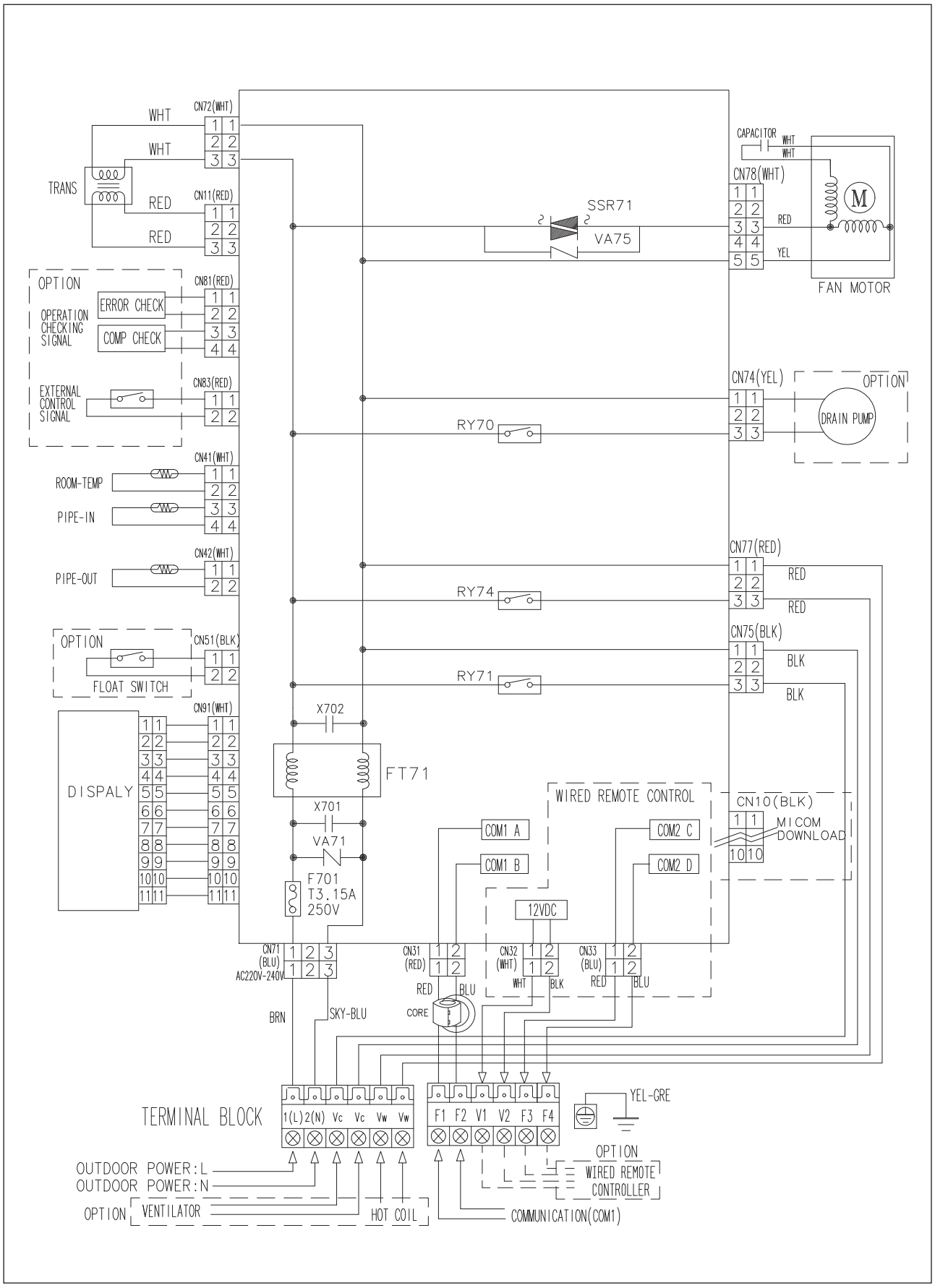

4 Electrical wiring diagram

4-2. Indoor units

6) Console - MH026/035/052FJEA

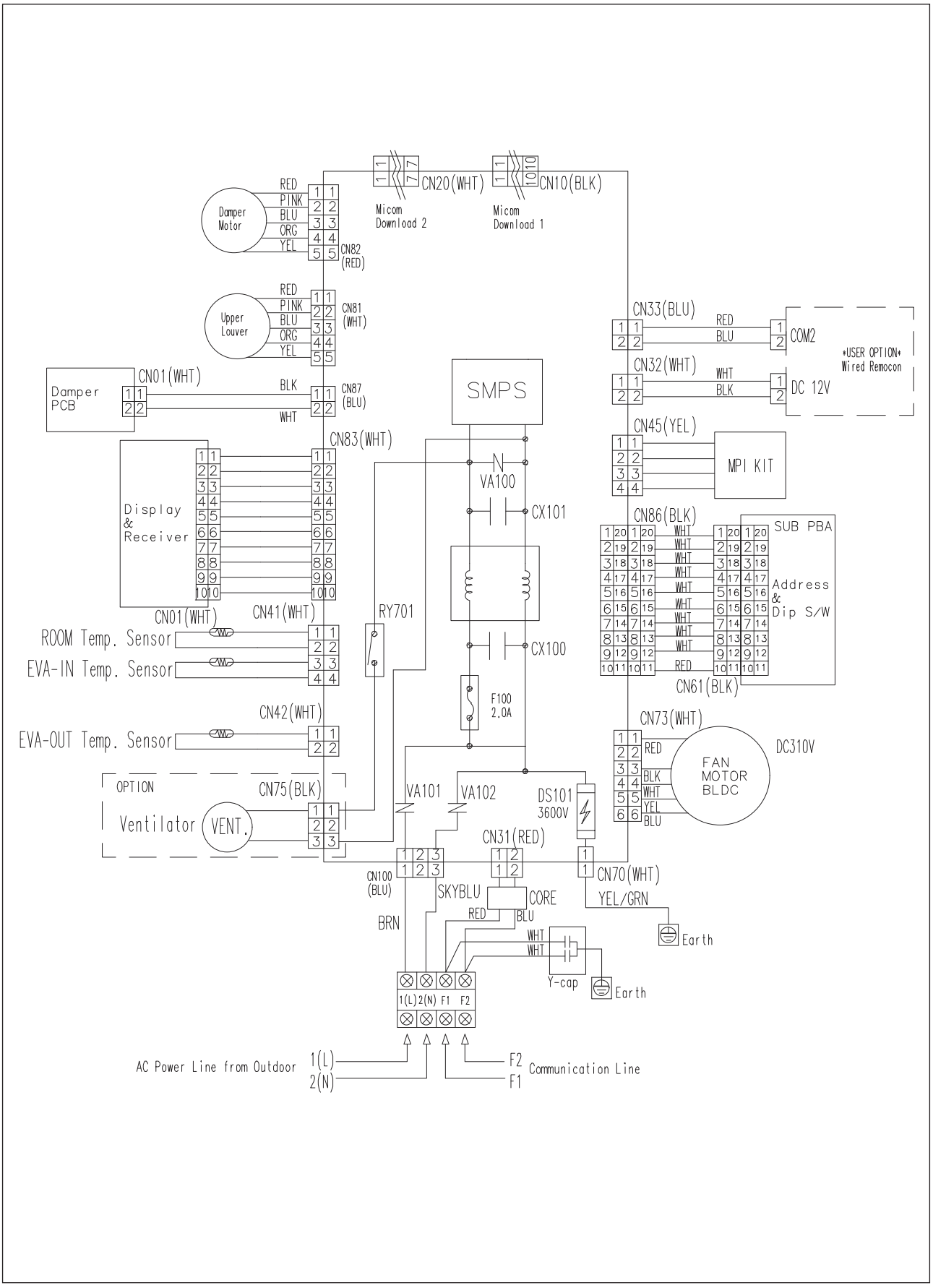

4 Electrical wiring diagram

4-2. Indoor units

7) AR9750/7580/5680/5580 - AR**JSPFBWKN**, AR**KSPDBWKN**, AR**KSWNAWKN**, AR**KSWS(A/B)WKN**

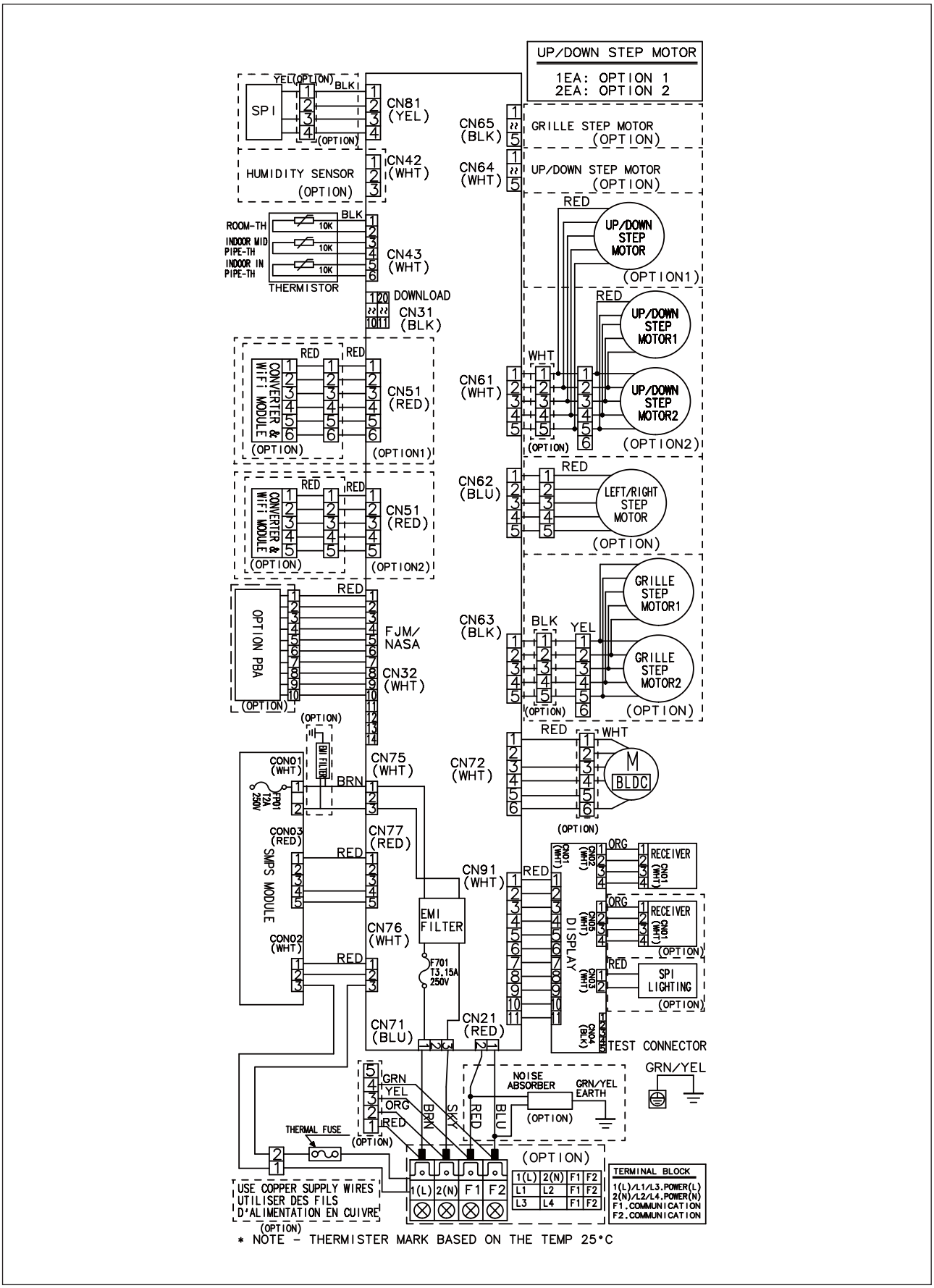

4 Electrical wiring diagram

4-2. Indoor units

8) New Boracay - AR07/09/12/18/24KSFHBWKN**

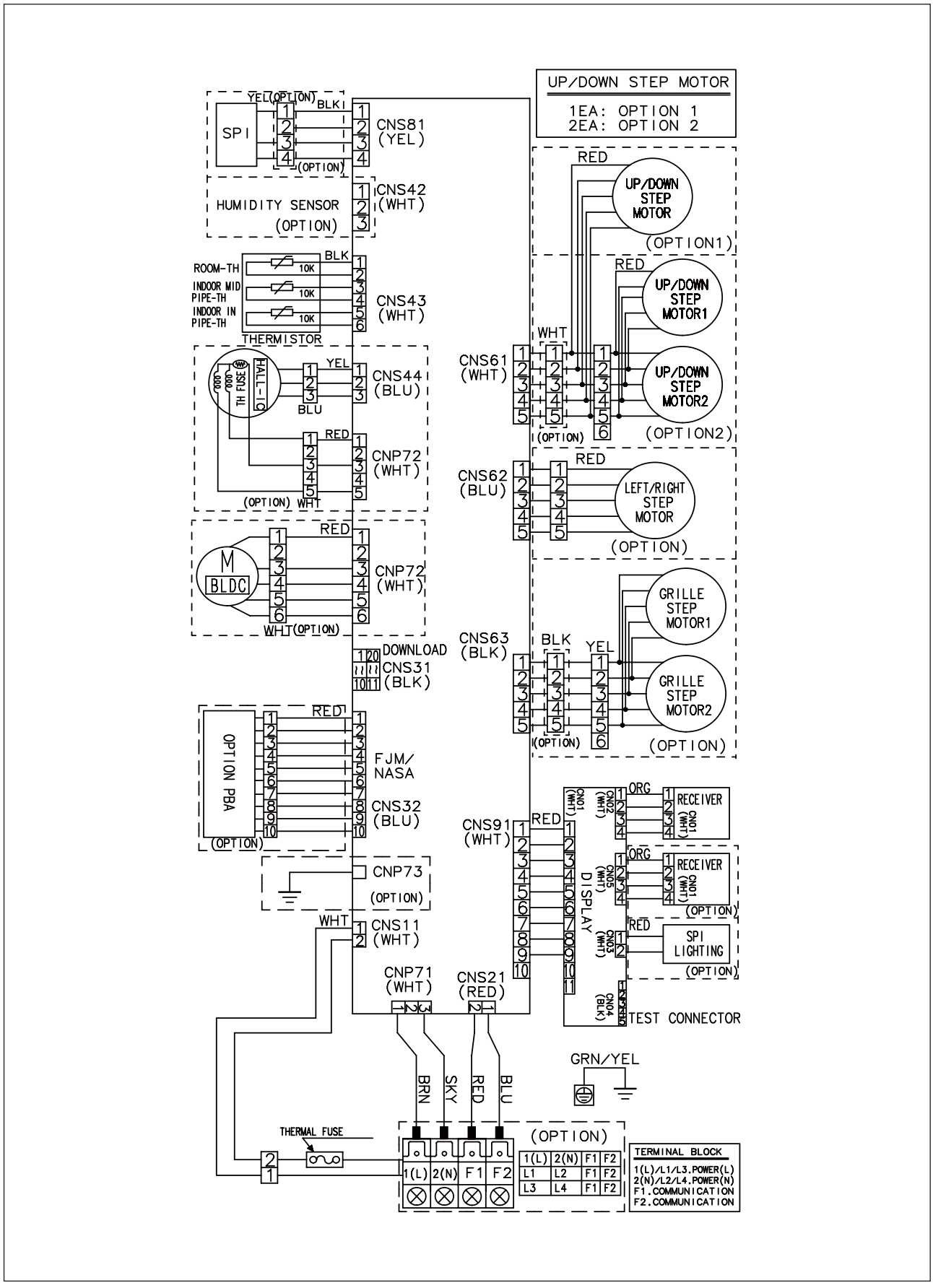

5 Cycle diagram

5-1. AJ040FCJ2EH/EU

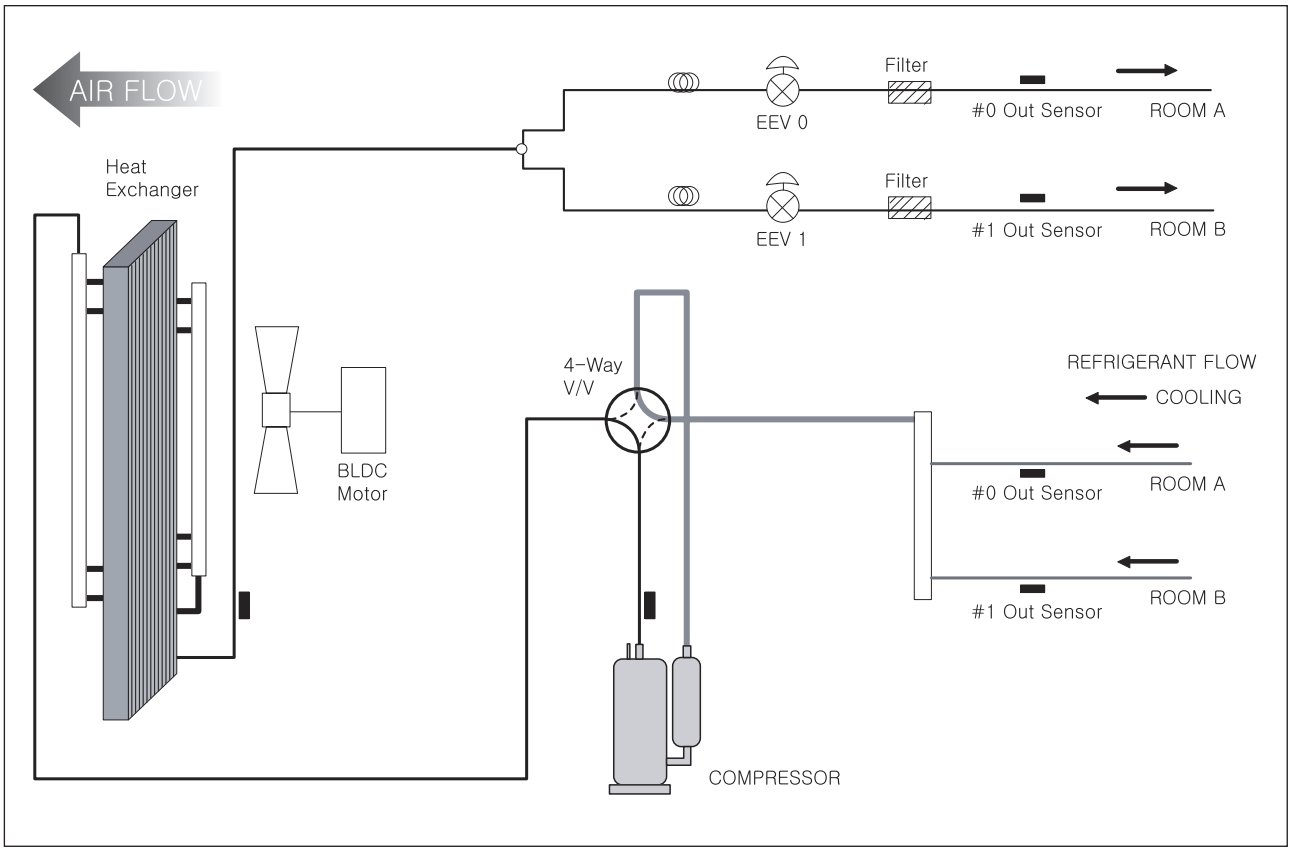

5-2. AJ050FCJ2EH/EU

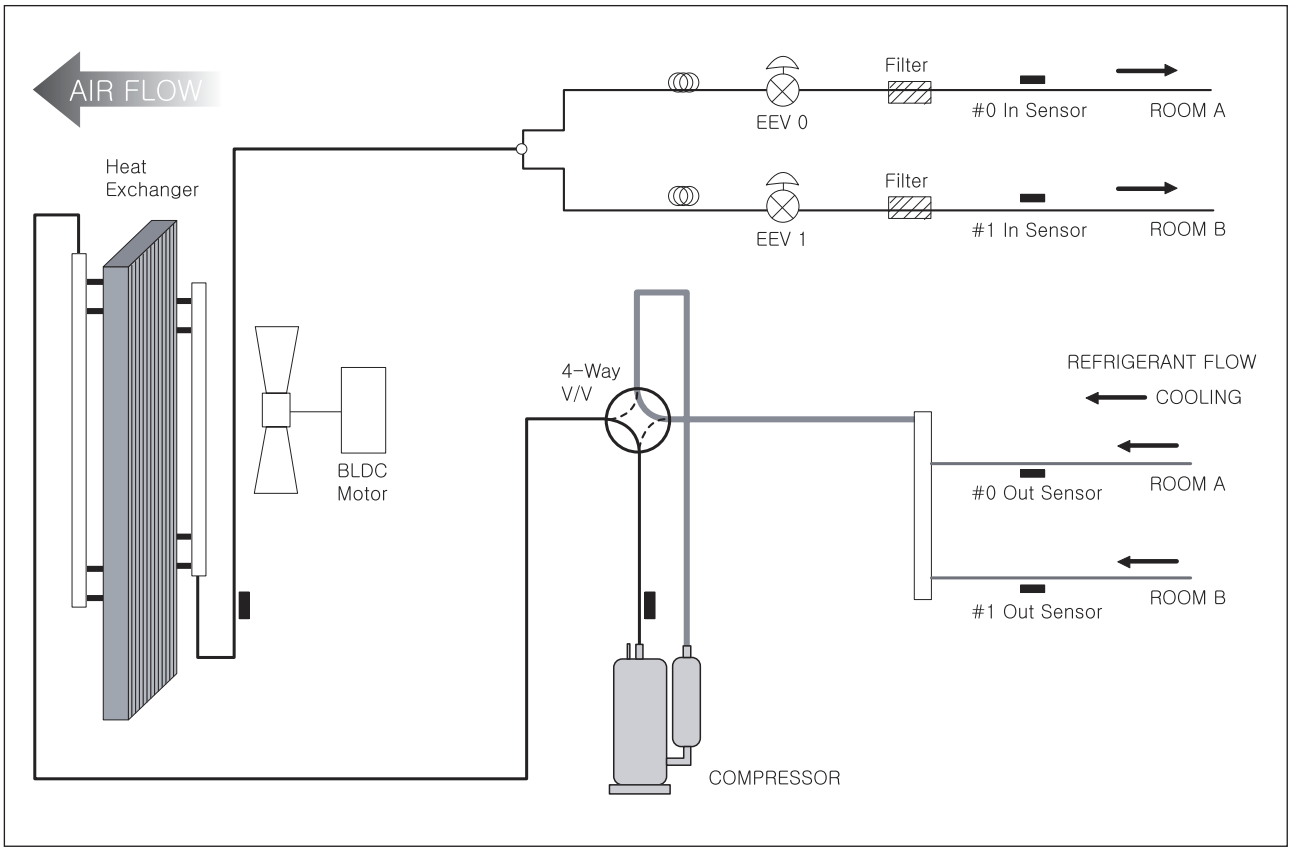

5 Cycle diagram

5-3. AJ052FCJ3EH/EU

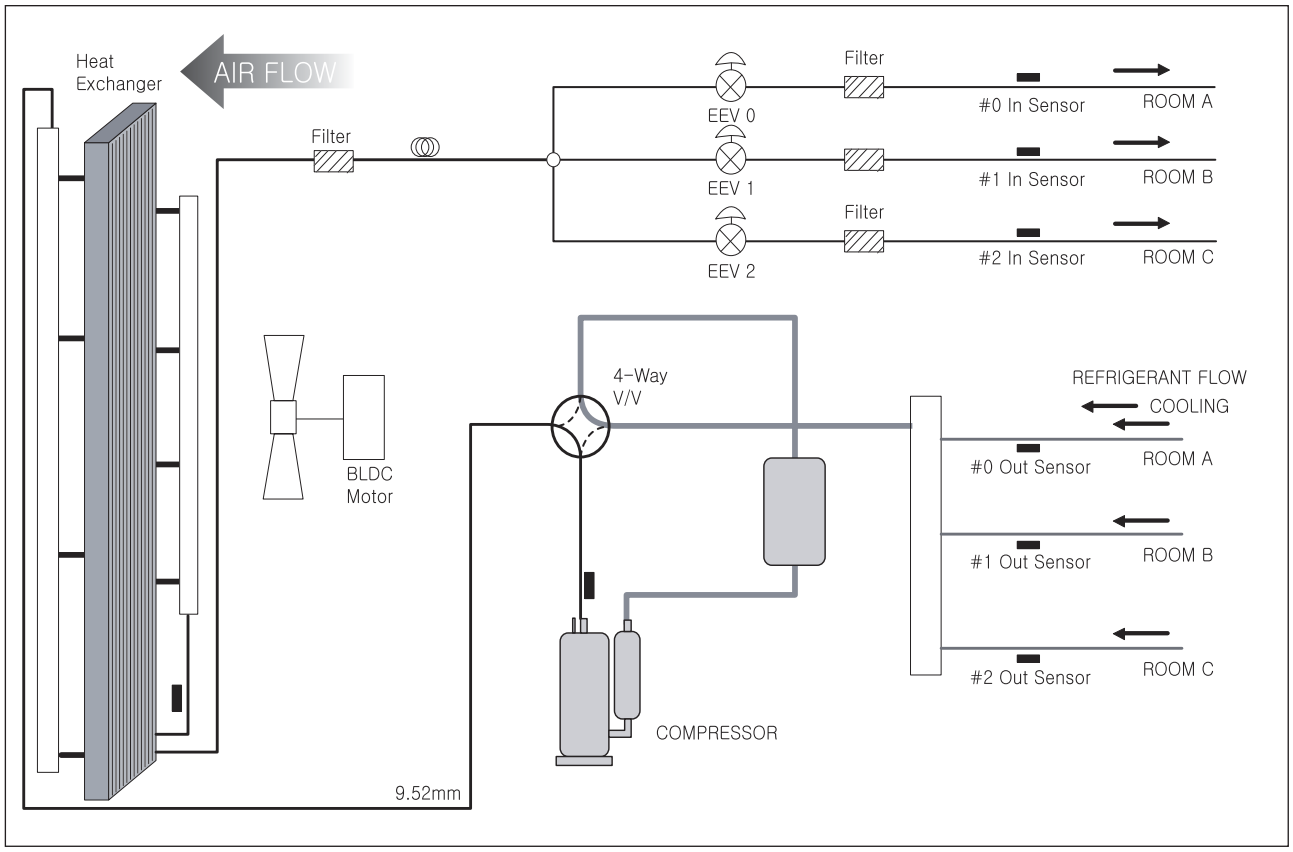

5-4. AJ068FCJ3EH/EU

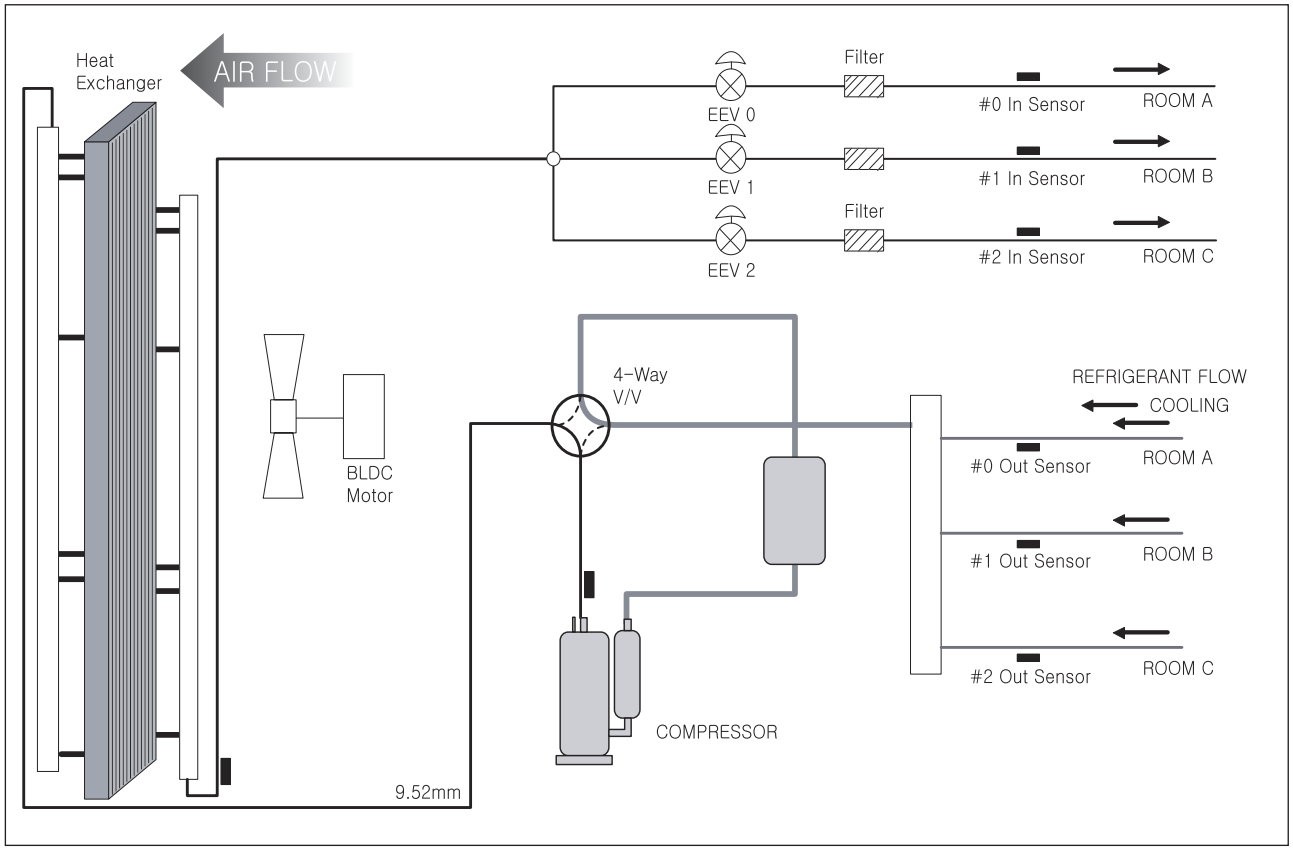

5-5.AJ070/080FCJ4EH/EU

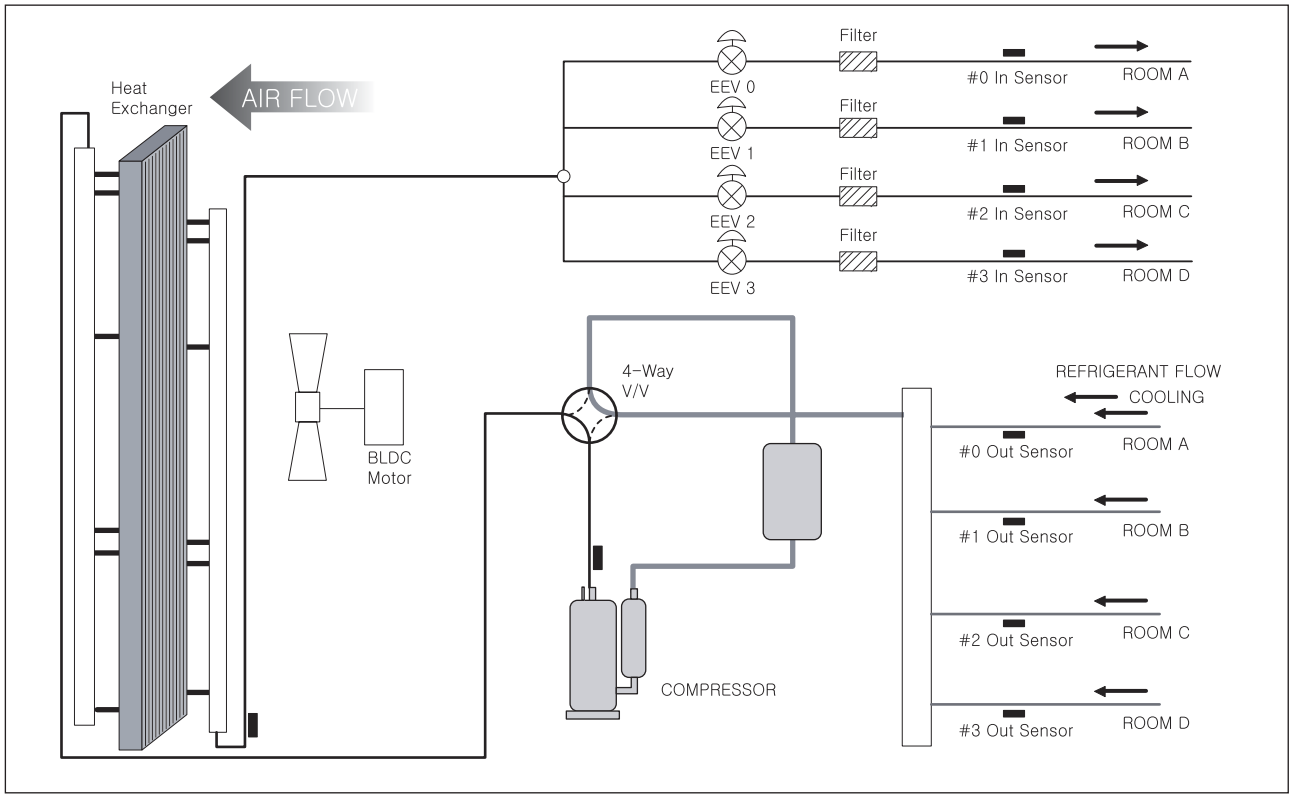

5-6. AJ100FCJ5EH/EU

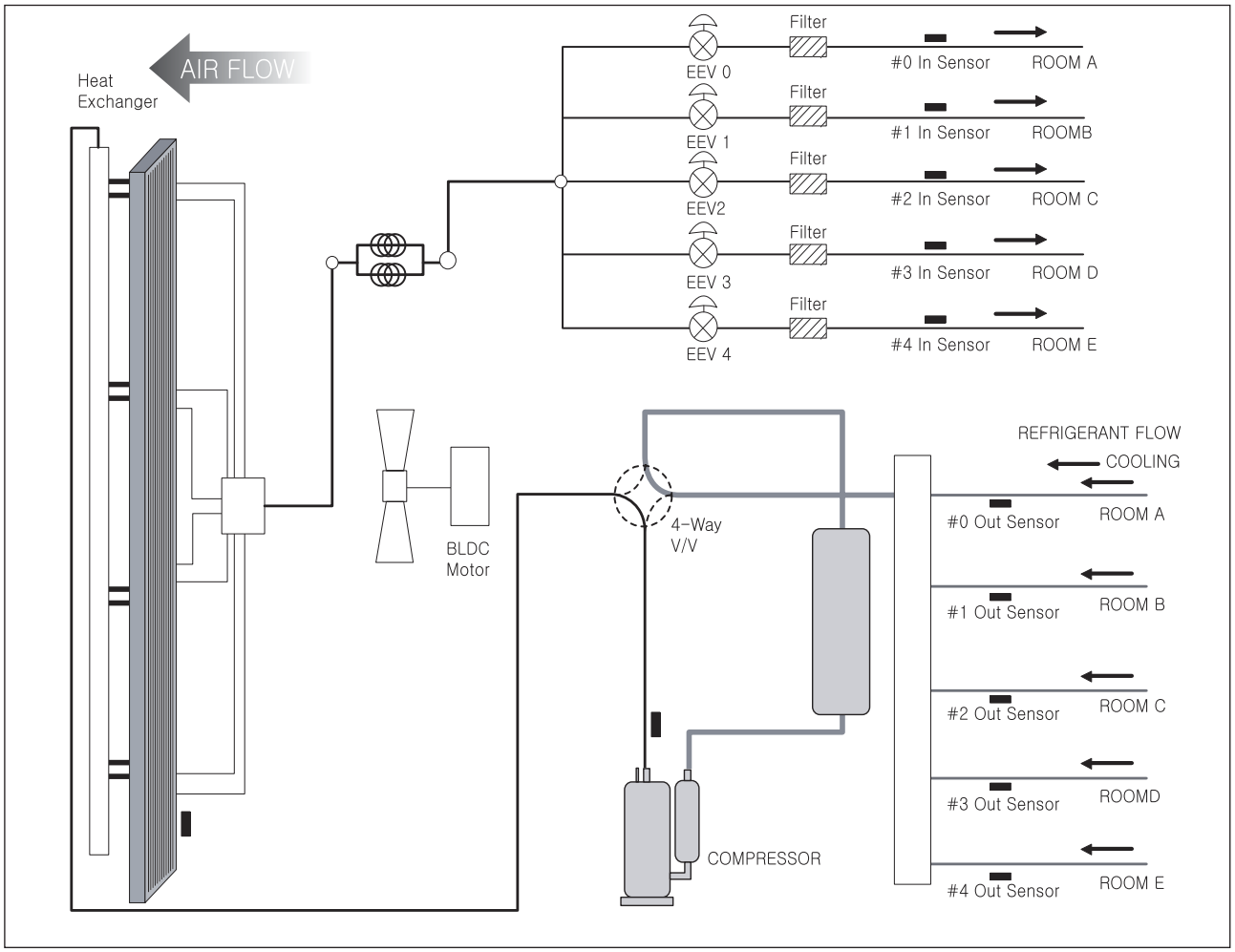

6 Sound pressure level

6-1. Outdoor units

1) Operation sound level

Type	Measuring Location	Model	Cooling
Outdoor Unit	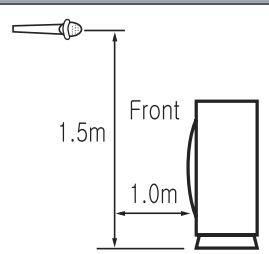	AJ040FCJ2EH/EU	45.0
		AJ050FCJ2EH/EU	46.0
		AJ052FCJ3EH/EU	46.0
		AJ068FCJ3EH/EU	48.0
		AJ070FCJ4EH/EU	48.0
		AJ080FCJ4EH/EU	49.0
		AJ100FCJ5EH/EU	54.0

☑ Note

- These operation values were obtaioned in an anechoic room. Sound pressure level will vary depending on a range of factors such as the construction of the particular room where the equipment is installed.
- Operation sound level may differ depending on operation and ambient conditions.

2) NC Curve

① AJ040FCJ2EH/EU

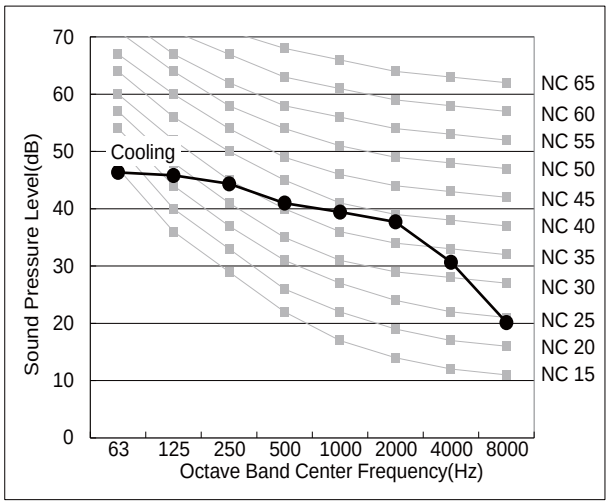

② AJ050FCJ2EH/EU

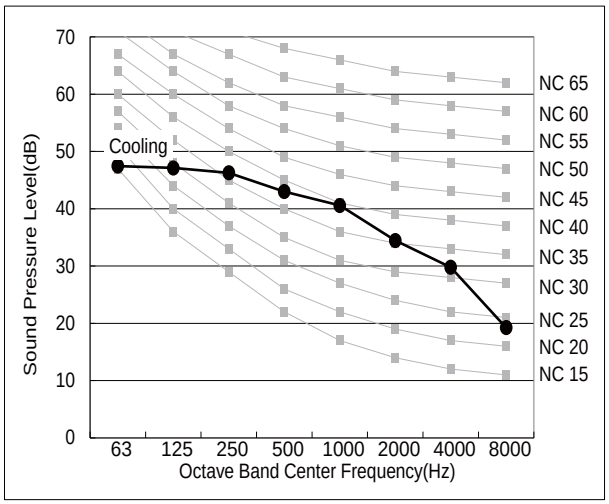

③ AJ052FCJ3EH/EU

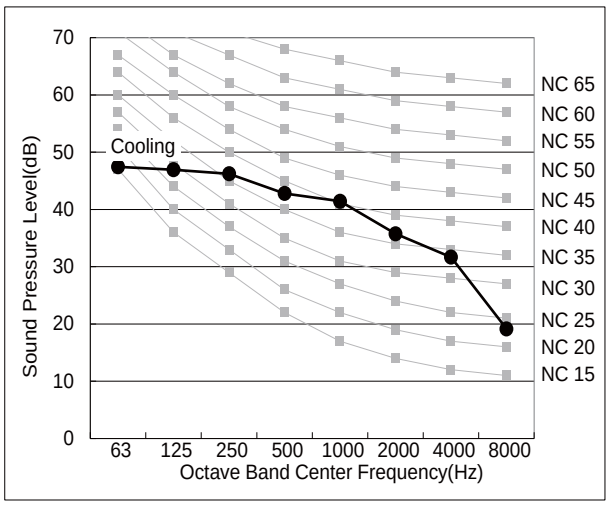

④ AJ068FCJ3EH/EU

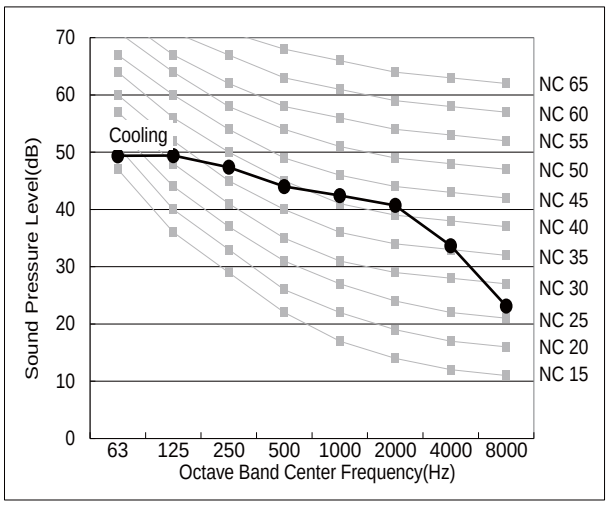

⑤ AJ070FCJ4EH/EU

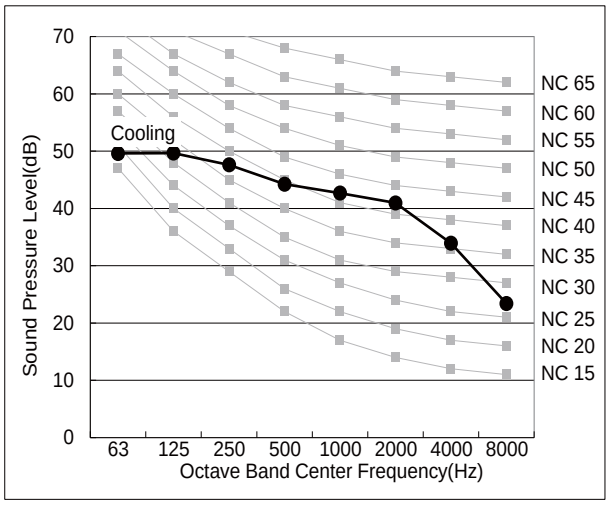

⑥ AJ080FCJ4EH/EU

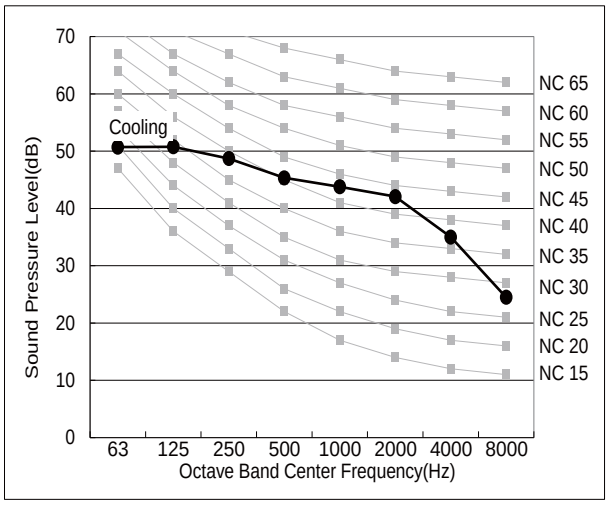

⑦ AJ100FCJ5EH/EU

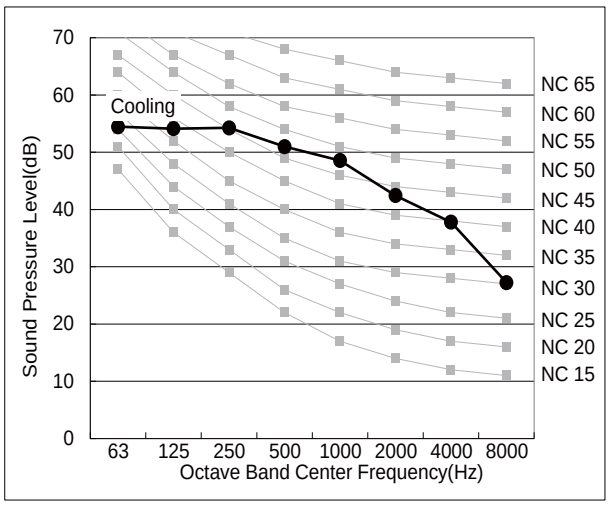

6 Sound pressure level

6-2. Indoor units

1) Operation sound level

Type	Measuring Location	Model	High	Low
1Way Cassette	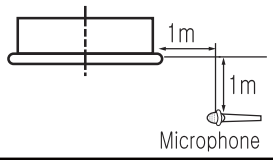	MH026FSEA	31	27
		MH035FSEA	36	30
4Way Cassette (600x600)	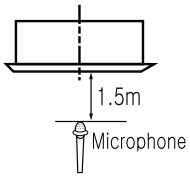	AJN016NDEHA/EU	33	26
		AJN020NDEHA/EU	33	26
		AJN026NDEHA/EU	33	27
		AJN035NDEHA/EU	35	27
		AJN052NDEHA/EU	39	32
Slim Duct	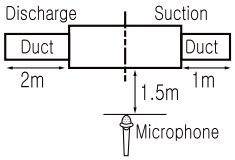	NJ026LHXEA	30	25
		NJ035LHXEA	32	27
MSP Duct		MH052FUEA	42	39
Console	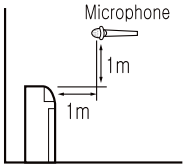	MH026FJEA	36	29
		MH035FJEA	42	32
		MH052FJEA	42	35

Type	Measuring Location	Model	High	Low
AR9570	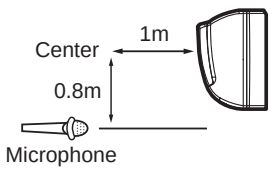	AR09JSPFBWKNEU	38	16
		AR12JSPFBWKNEU	40	16
AR7580		AR07KSPDBWKNEU	38	16
		AR09KSPDBWKNEU	38	16
		AR12KSPDBWKNEU	40	16
		AR18KSPDBWKNEU	42	25
		AR24KSPDBWKNEU	43	26
AR5580		AR07KSWSBWKNEU	37	19
		AR09KSWSBWKNET	37	19
		AR12KSWSBWKNET	38	19
		AR18KSWSAWKNEU	41	25
		AR24KSWSAWKNEU	43	26
AR5680		AR07KSWNAWKNEU	37	19
		AR09KSWNAWKNET	37	19
		AR12KSWNAWKNET	38	19
		AR18KSWNAWKNEU	41	25
		AR24KSWNAWKNEU	43	26
New Boracay		AR07KSFHBWKNEU	38	21
		AR09KSFHBWKNET	38	21
		AR12KSFHBWKNET	42	21
		AR18KSFHBWKNEU	42	25
		AR24KSFHBWKNEU	44	28
Maldives		AR07KSFPEWQNEU	37	23
		AR09KSFPEWQNET	37	23
		AR12KSFPEWQNET	42	23
		AR18FSFPDGMNEU	40	27
		AR24FSFPDGMNEU	44	29

2) NC Curve - Moldives

① AR07KSFPEWQNEU

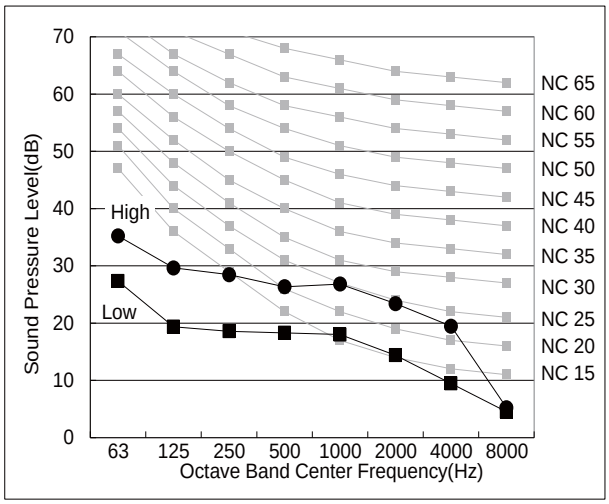

② AR09KSFPEWQNET

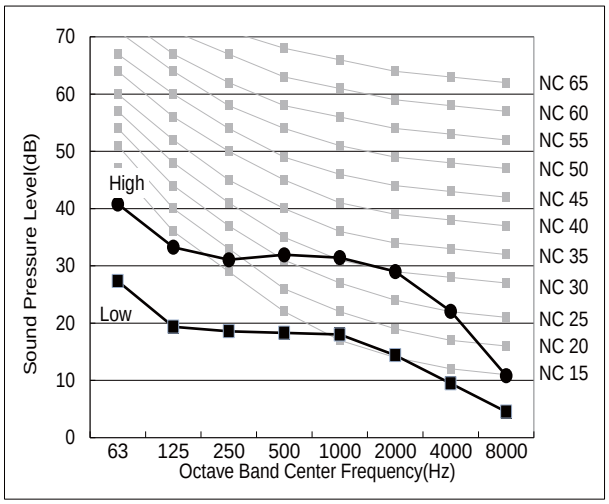

③ AR12KSFPEWQNET

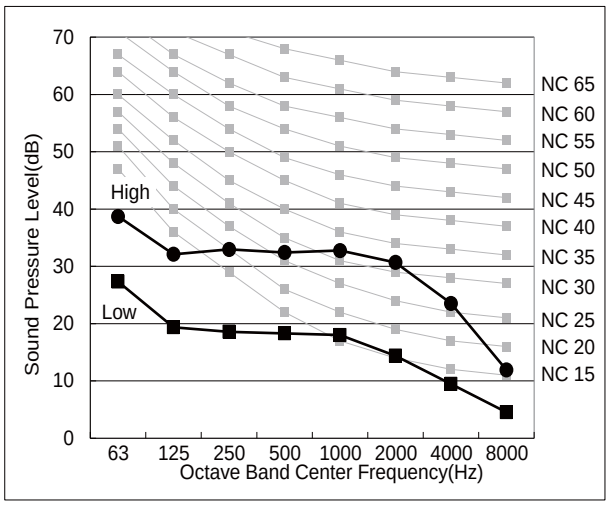

④ AR18FSFPDGMNEU

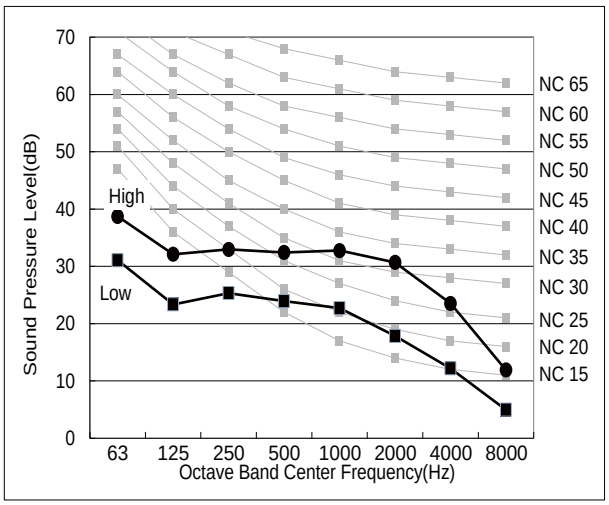

⑤ AR24FSFPDGMNEU

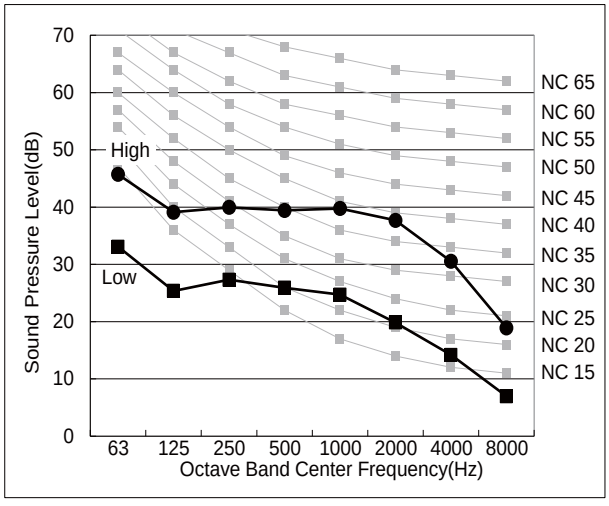

2) NC Curve - Slim 1Way Cassette

① MH026FSEA

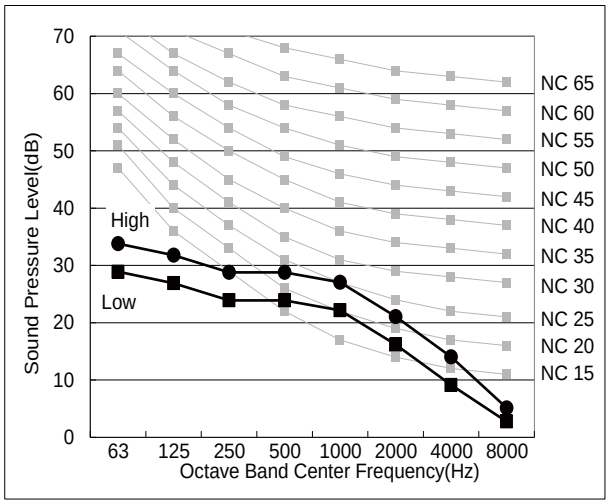

② MH035FSEA

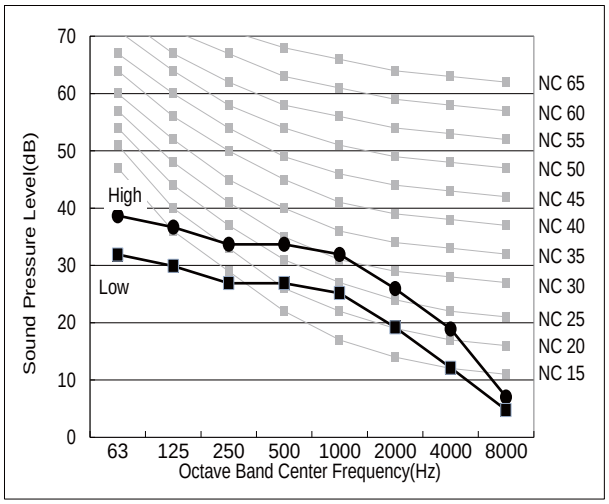

2) NC Curve - 4Way Cassette (600x600)

① AJN016NDEHA/EU

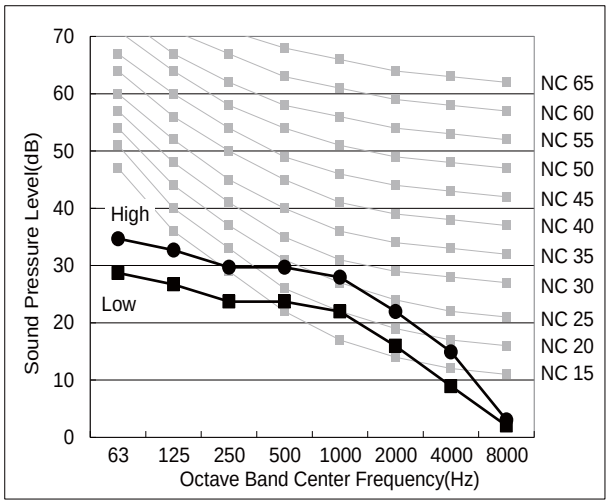

② AJN020NDEHA/EU

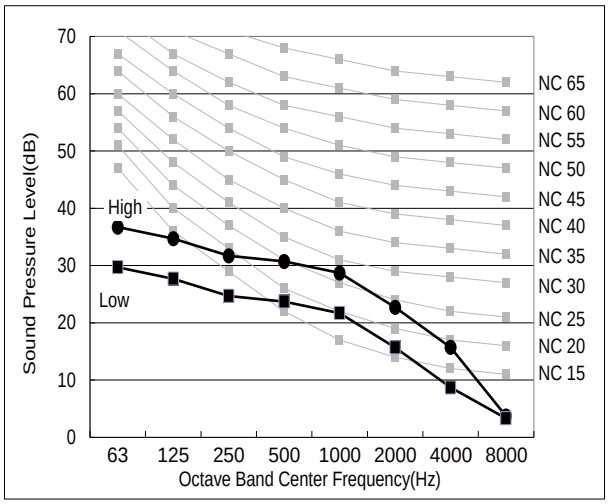

③ AJN026NDEHA/EU

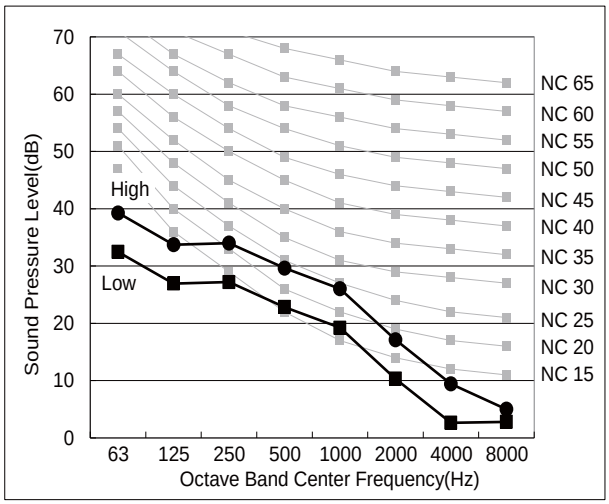

④ AJN035NDEHA/EU

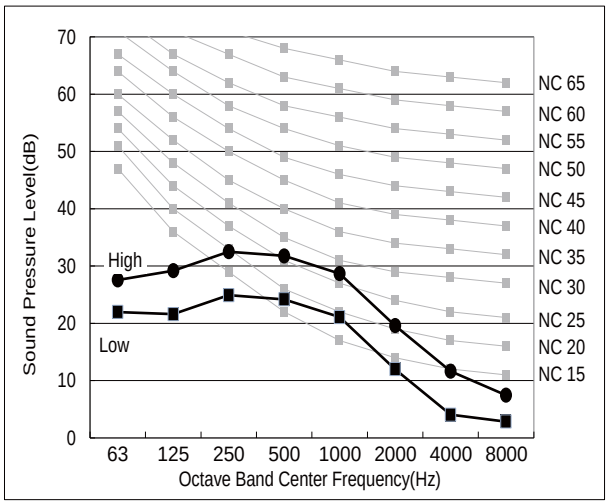

⑤ AJN052NDEHA/EU

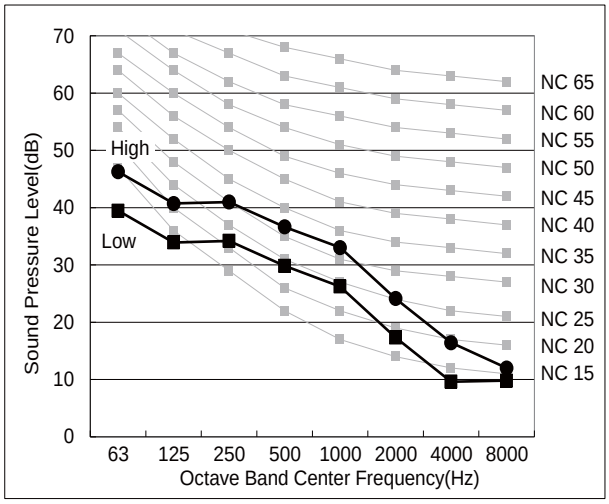

2) NC Curve - Slim Duct, MSP Duct

① NJ026LHXEA

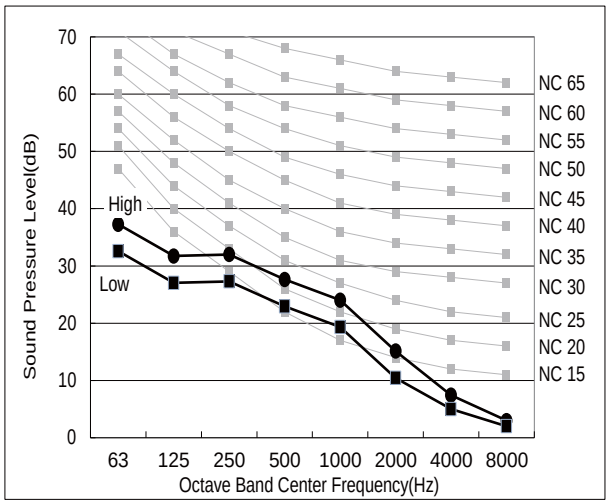

② NJ035LHXEA

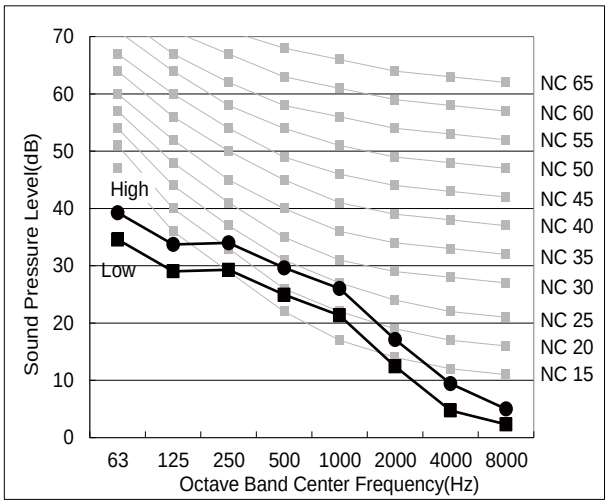

③ MH052FUEA

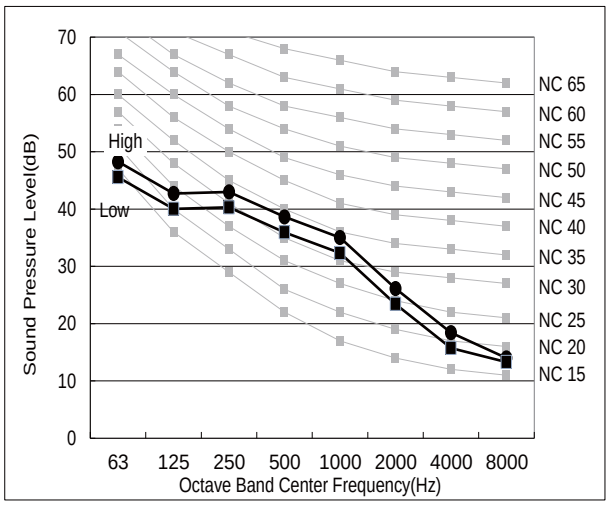

2) NC Curve - Console

① MH026FJEA

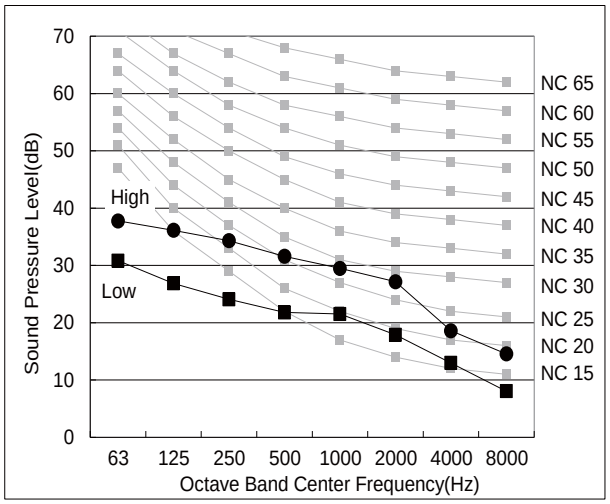

② MH035FJEA

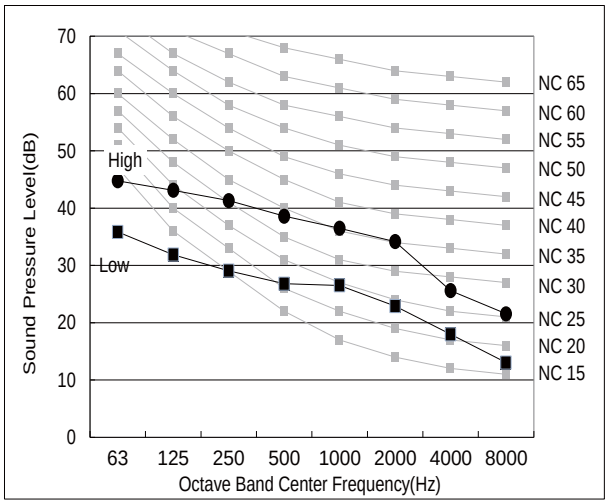

③ MH052FJEA

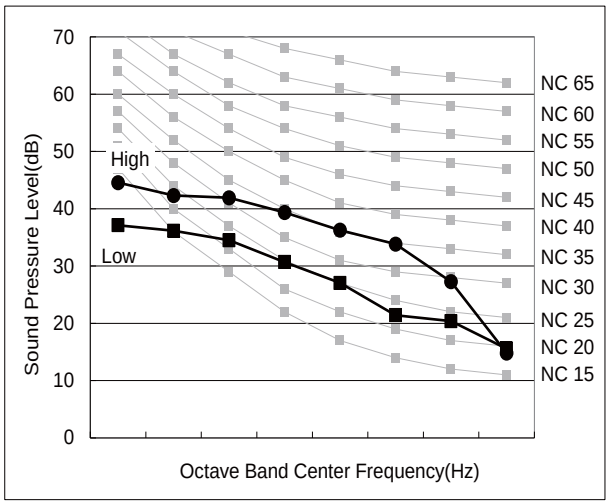

6 Sound pressure level

6-2. Indoor units

2) NC Curve - AR9570

① AR09JSPFBWKNEU

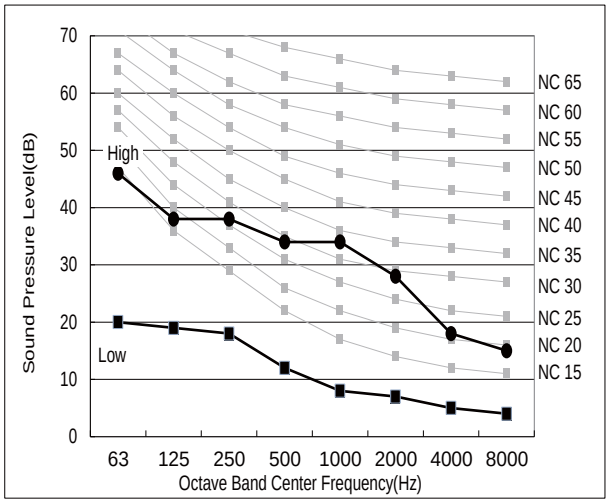

② AR12JSPFBWKNEU

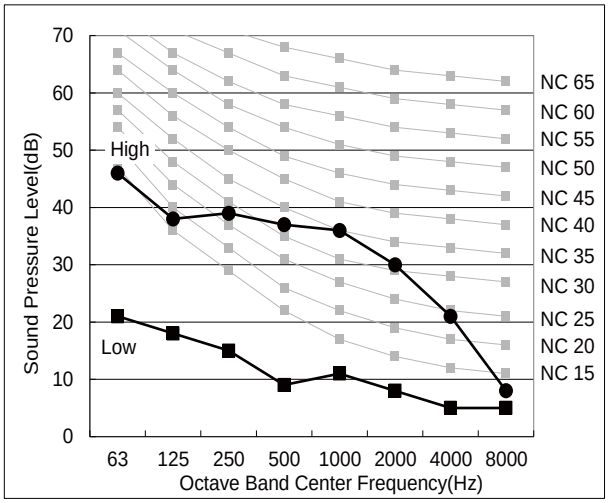

6 Sound pressure level

6-2. Indoor units

2) NC Curve - AR7580

① AR07KSPDBWKNEU

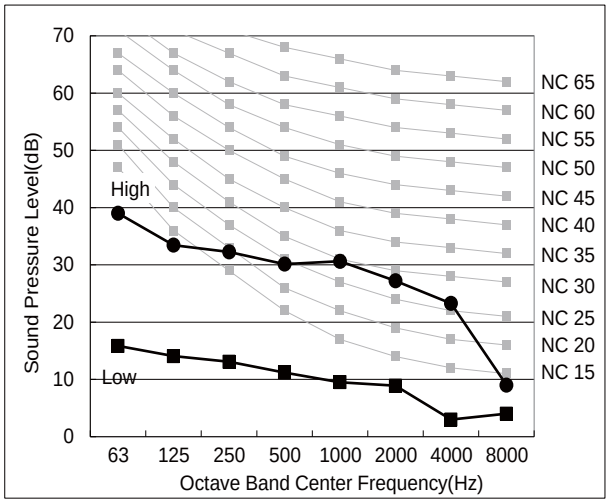

② AR09KSPDBWKNEU

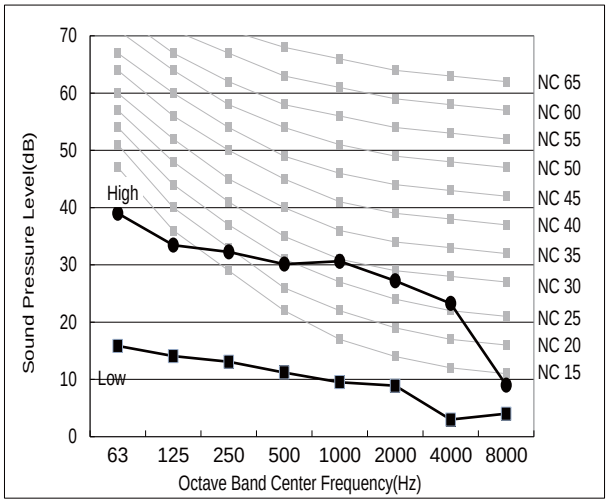

③ AR12KSPDBWKNEU

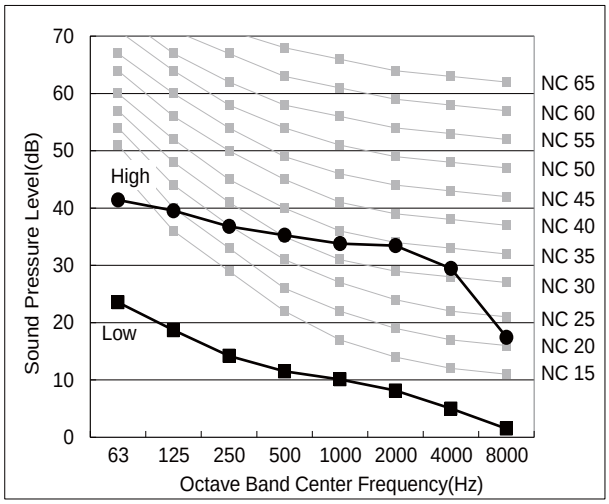

④ AR18KSPDBWKNEU

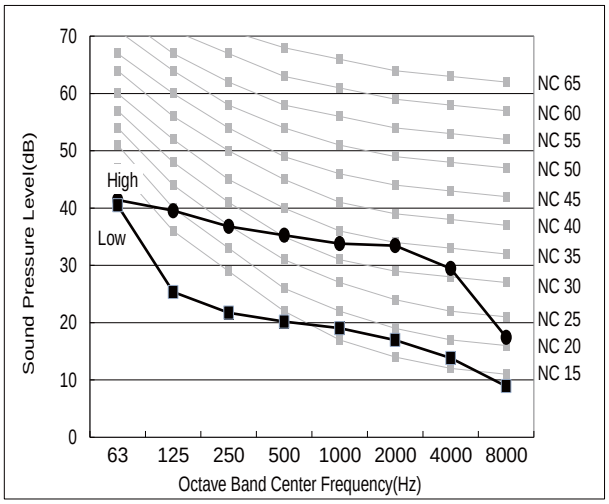

⑤ AR24KSPDBWKNEU

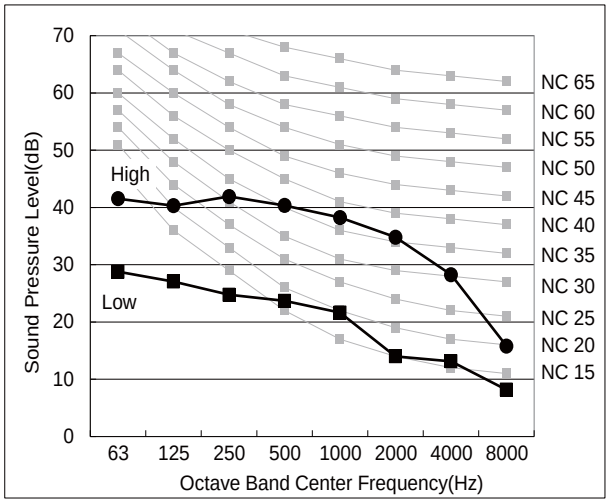

6 Sound pressure level

6-2. Indoor units

2) NC Curve - AR5680/5580

① AR07KSWSAWKNEU

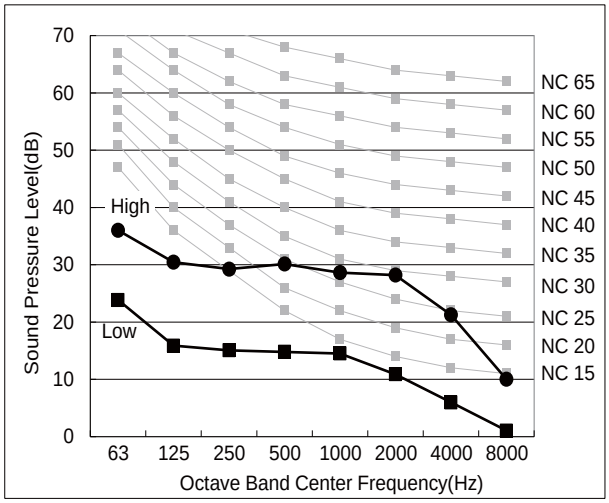

② AR07KSWNAWKNEU

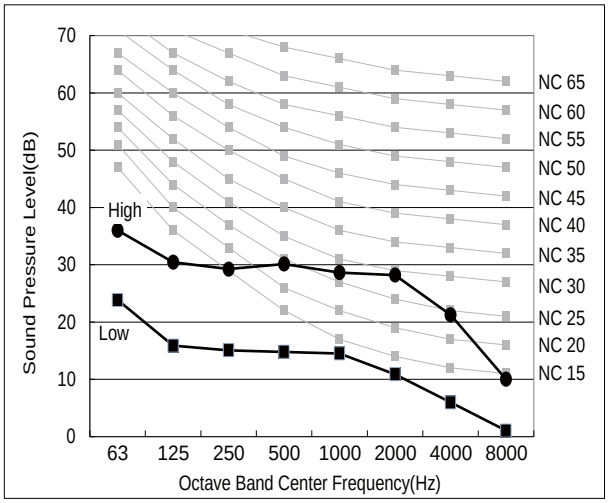

③ AR09KSWSBWKNET

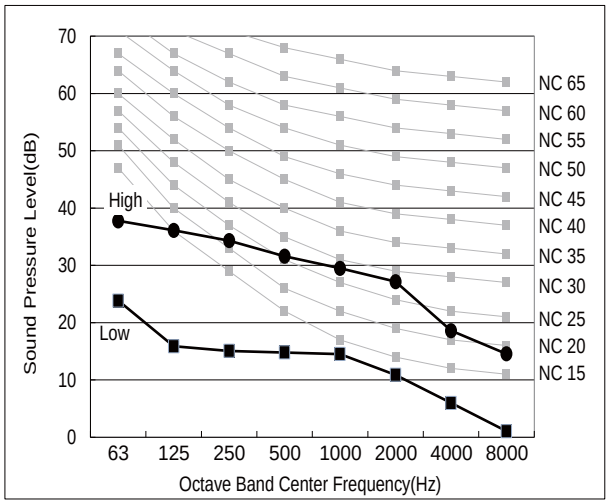

④ AR09KSWNAWKNET

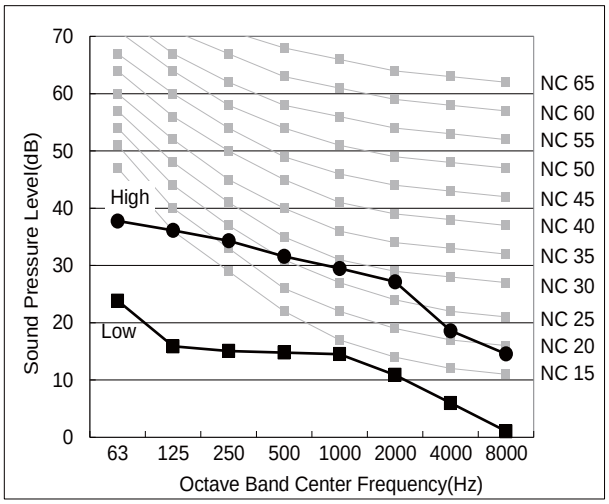

⑤ AR12KSWSBWKNET

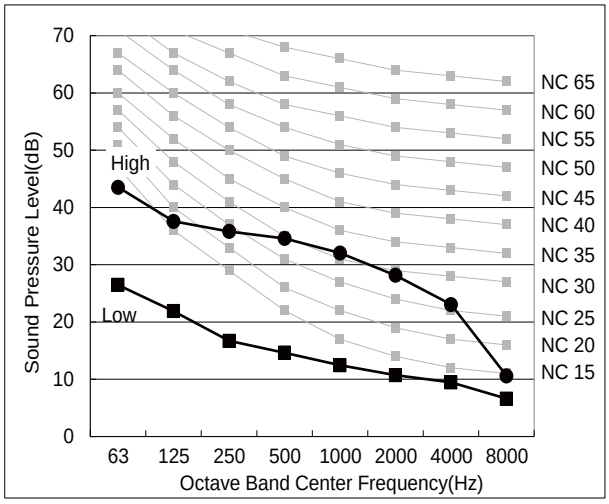

⑥ AR12KSWNAWKNET

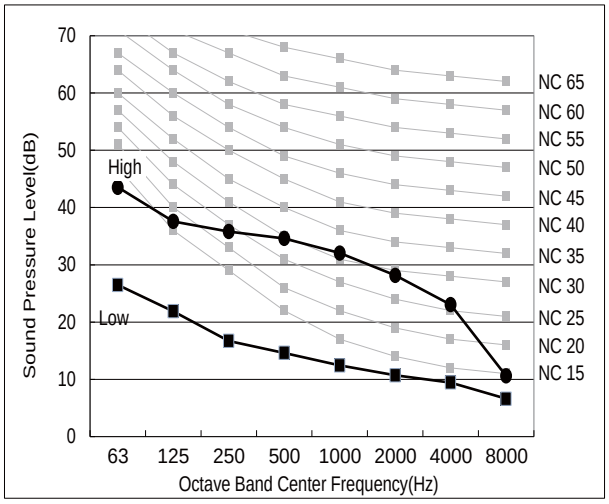

2) NC Curve - AR5680/5580

⑦ AR18KSWSAWKNEU

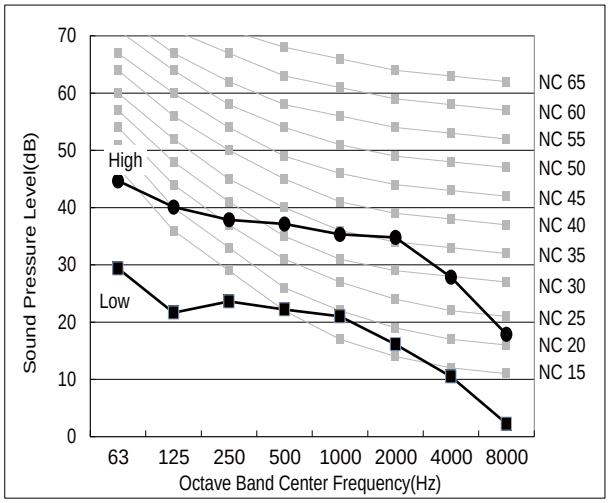

⑧ AR18KSWNAWKNEU

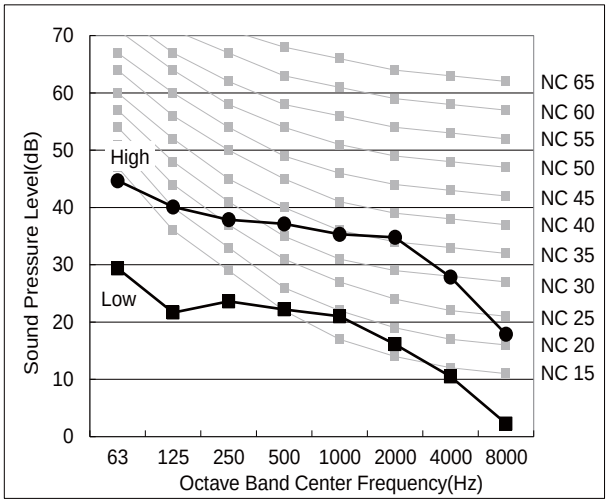

⑨ AR24KSWSAWKNEU

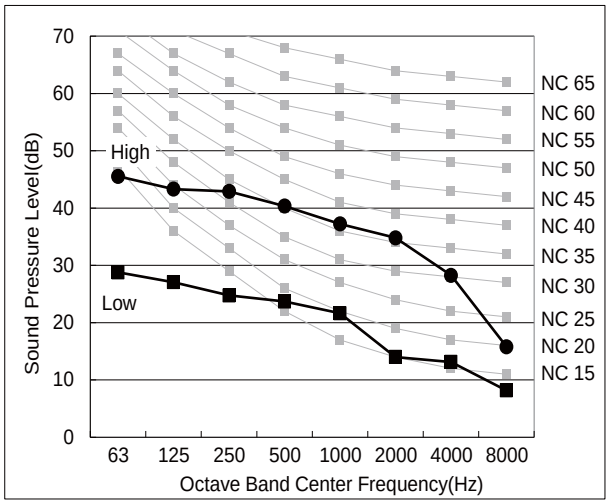

⑩ AR24KSWNAWKNEU

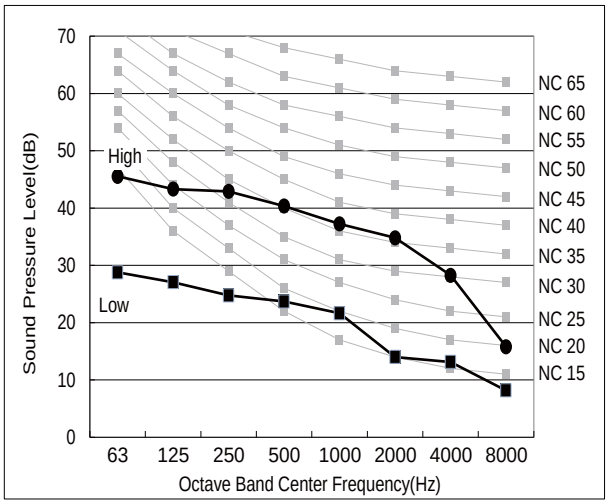

6 Sound pressure level

6-2. Indoor units

2) NC Curve - New Boracay

① AR07KSFHBWKNEU

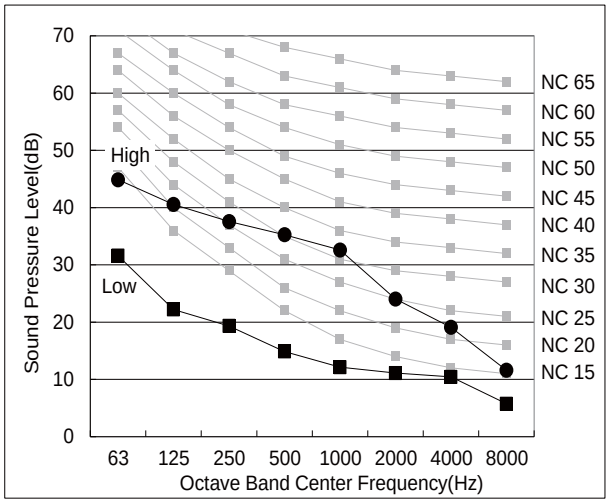

② AR09KSFHBWKNET

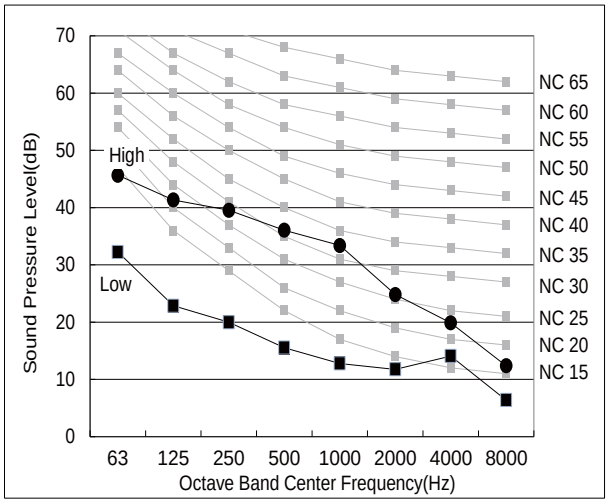

③ AR12KSFHBWKNET

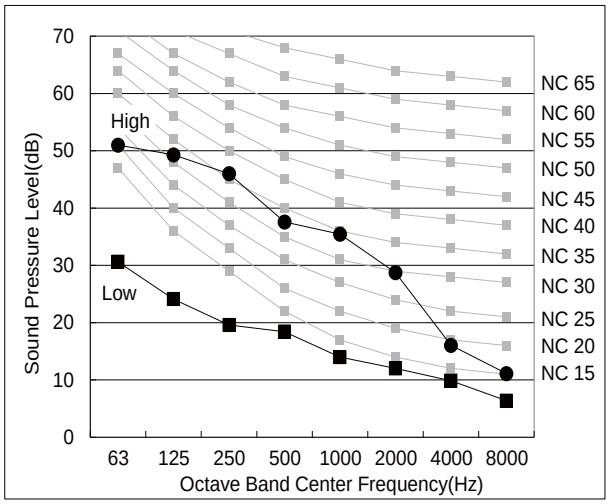

④ AR18KSFHBWKNEU

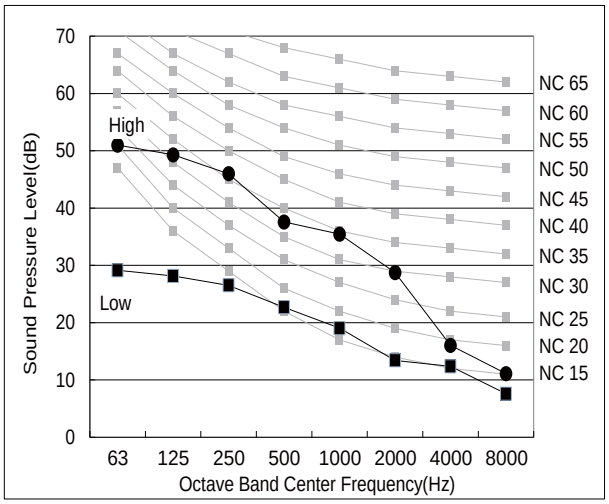

⑤ AR24KSFHBWKNEU

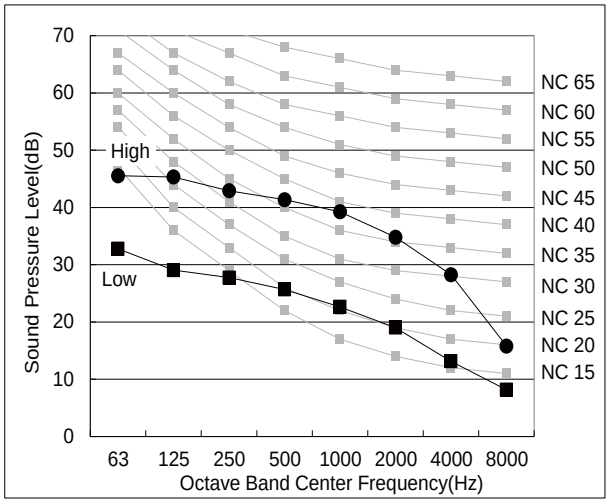

7 Sound power level

7-1. Outdoor units

1) Operation sound power level

Unit : dB(A)

Model	Power
AJ040FCJ2EH/EU	61
AJ050FCJ2EH/EU	61
AJ052FCJ3EH/EU	61
AJ068FCJ3EH/EU	63
AJ070FCJ4EH/EU	63
AJ080FCJ4EH/EU	63
AJ100FCJ5EH/EU	70

☑ Note

- dBA = A-Weighted sound power level.
- Reference power : 1pW
- Measured according to ISO 3741.

① AJ040FCJ2EH/EU

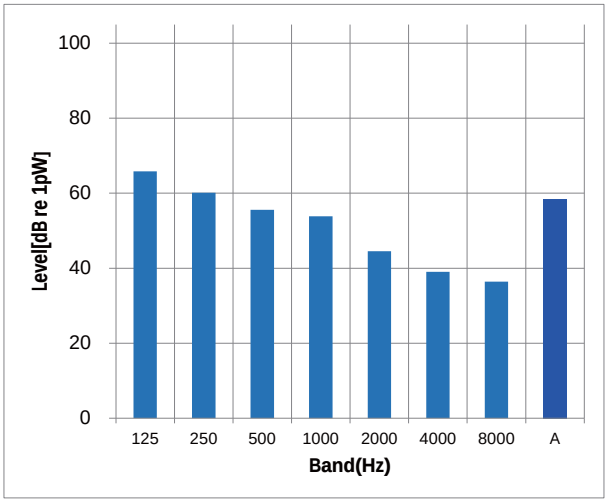

② AJ050FCJ2EH/EU

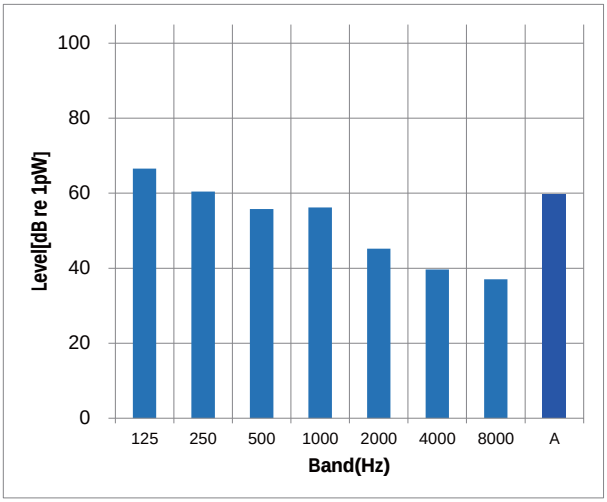

③ AJ052FCJ3EH/EU

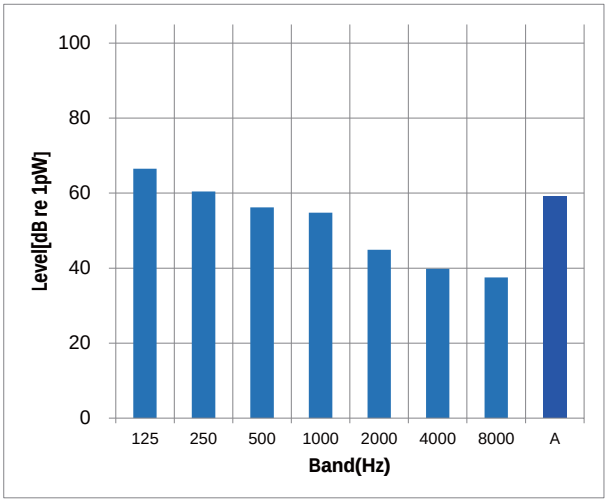

④ AJ068FCJ3EH/EU

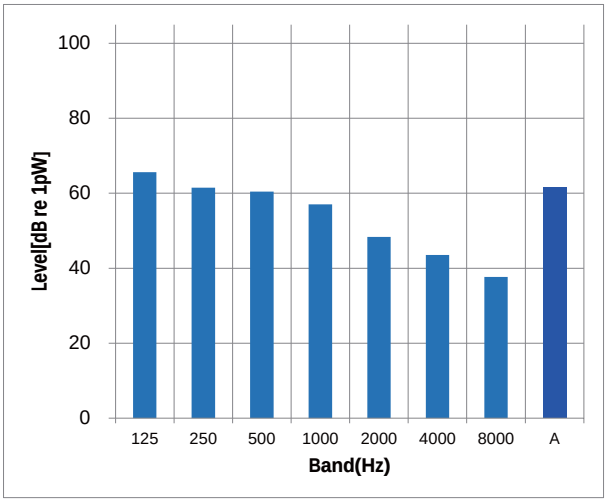

⑤ AJ070FCJ4EH/EU

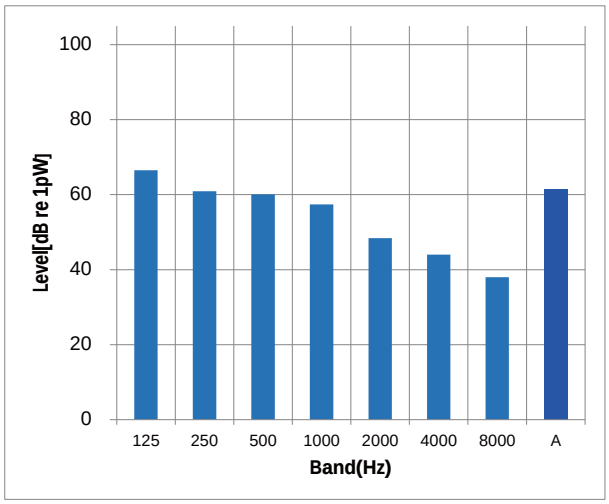

⑥ AJ080FCJ4EH/EU

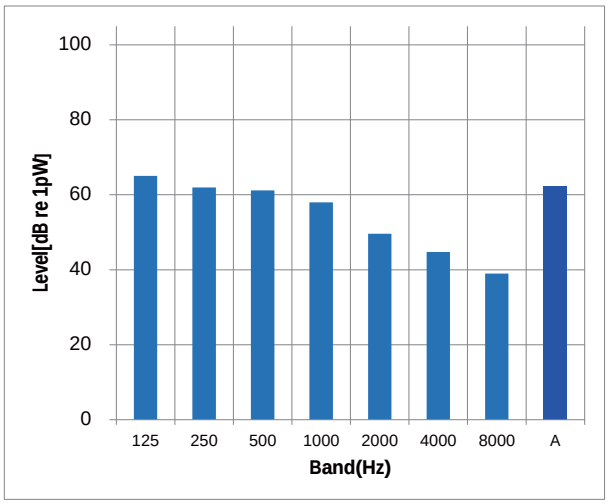

⑦ AJ100FCJ5EH/EU

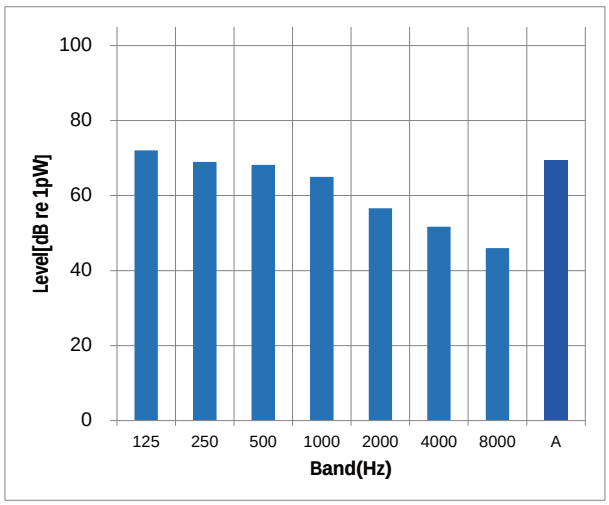

7 Sound power level

7-2. Indoor units - Maldives

1) Operation sound power level

Unit : dB(A)

Model	Power
AR07KSFPEWQNEU	56
AR09KSFPEWQNET	56
AR12KSFPEWQNET	59
AR18FSFPDGMNEU	57
AR24FSFPDGMNEU	62

☑ Note

- dBA = A-Weighted sound power level.
- Reference power : 1pW
- Measured according to ISO 3741.

① AR07KSFPEWQNEU

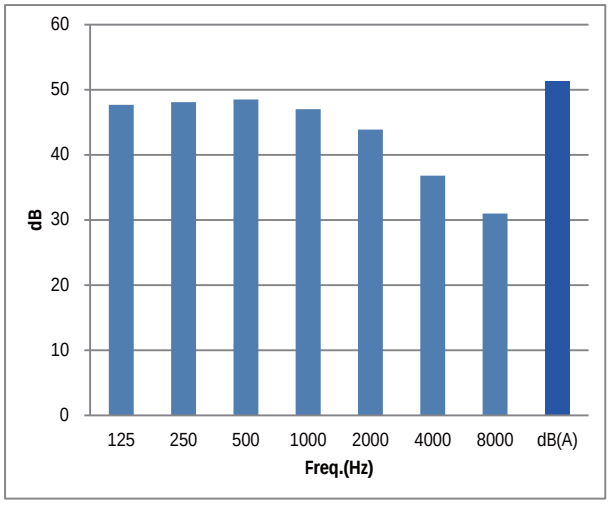

② AR09KSFPEWQNET

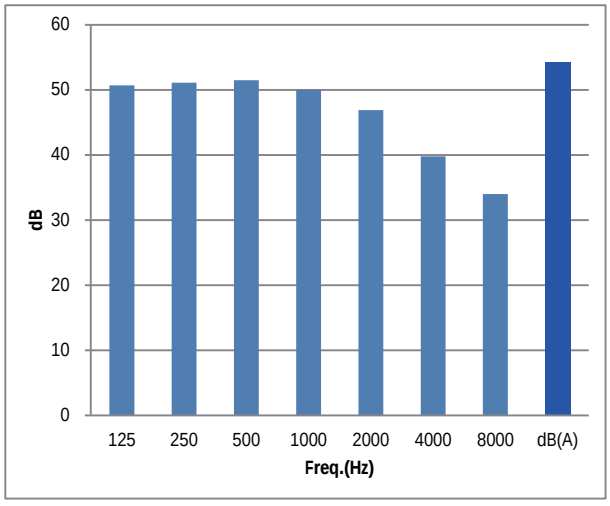

③ AR12KSFPEWQNET

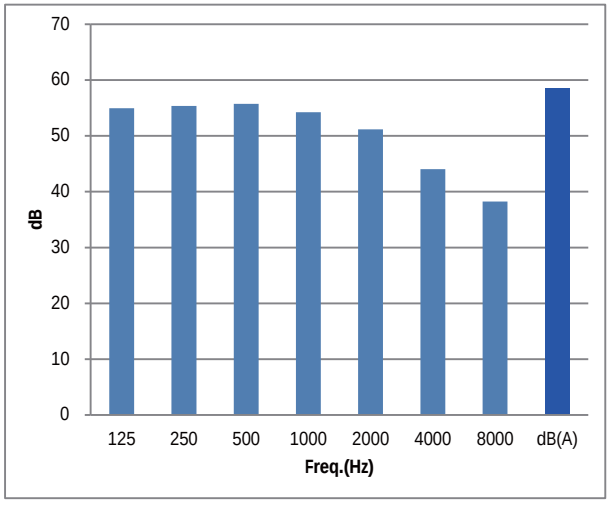

④ AR18FSFPDGMNEU

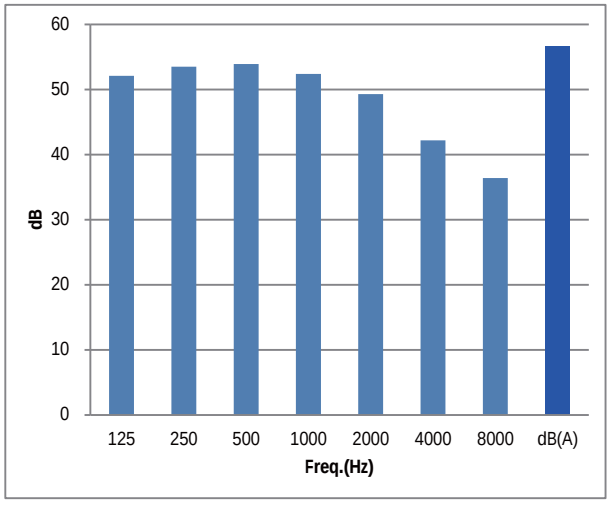

⑤ AR24FSFPDGMNEU

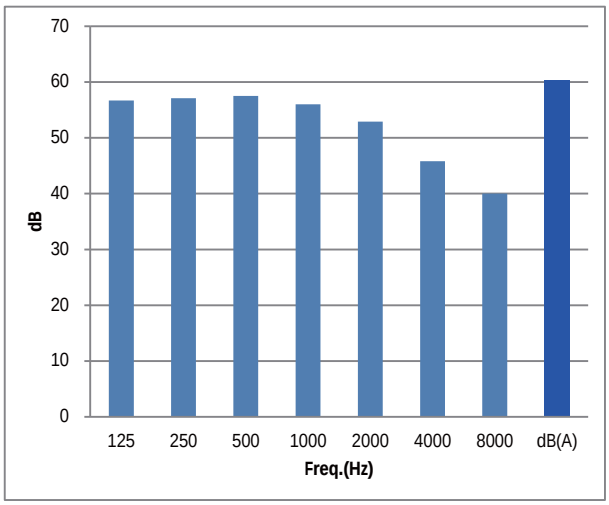

7 Sound power level

7-2. Indoor units - AR9570

1) Operation sound power level

Unit : dB(A)

Model	Power
AR09JSPFBWKNEU	57
AR12JSPFBWKNEU	59

☑ Note

- dBA = A-Weighted sound power level.
- Reference power : 1pW
- Measured according to ISO 3741.

① AR09JSPFBWKNEU

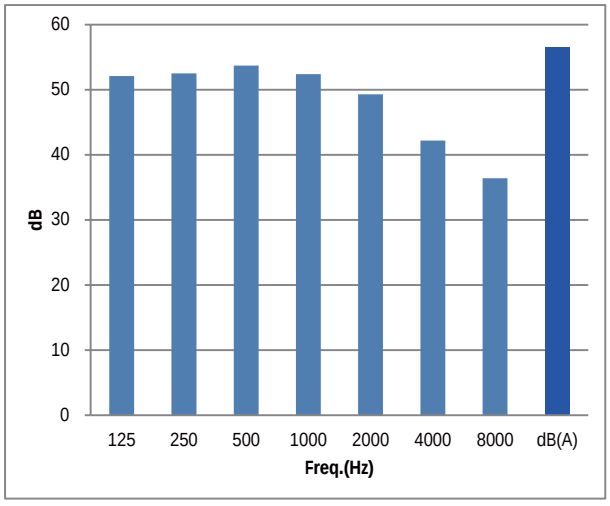

② AR12JSPFBWKNEU

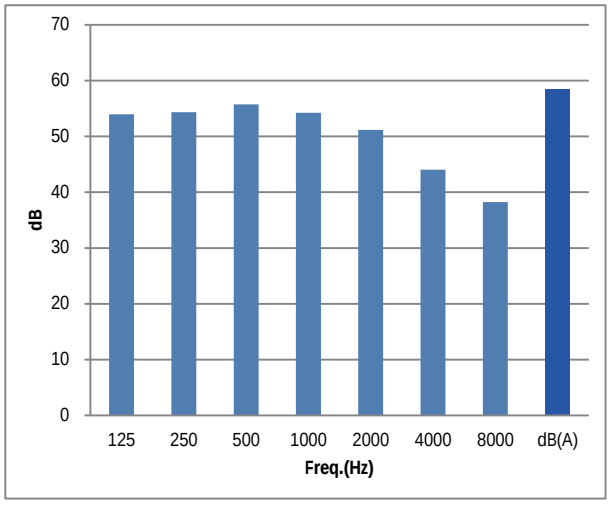

7 Sound power level

7-2. Indoor units - AR7580

1) Operation sound power level

Unit : dB(A)

Model	Power
AR07KSPDBWKNEU	56
AR09KSPDBWKNEU	56
AR12KSPDBWKNEU	58
AR18KSPDBWKNEU	58
AR24KSPDBWKNEU	62

☑ Note

- dBA = A-Weighted sound power level.
- Reference power : 1pW
- Measured according to ISO 3741.

① AR07KSPDBWKNEU

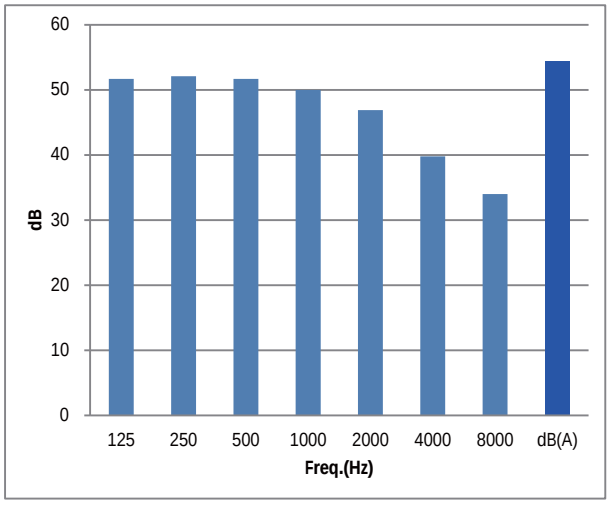

② AR09KSPDBWKNEU

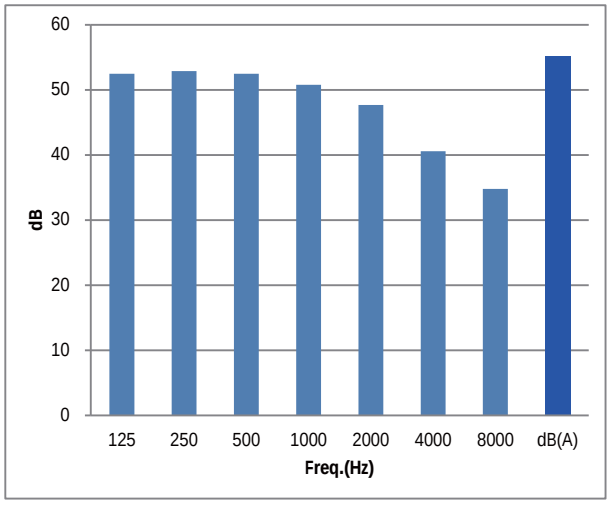

③ AR12KSPDBWKNEU

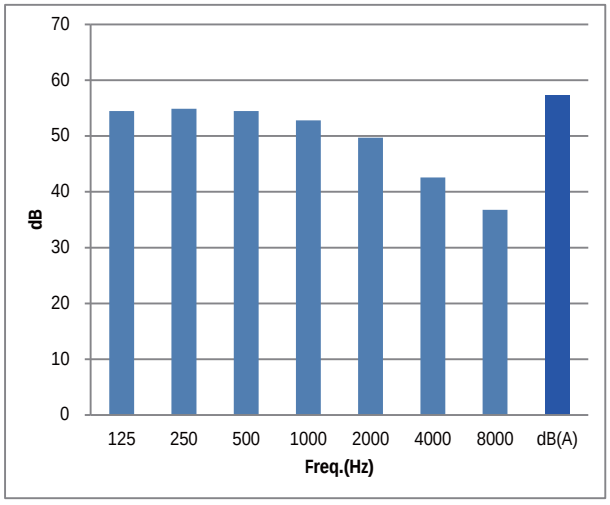

④ AR18KSPDBWKNEU

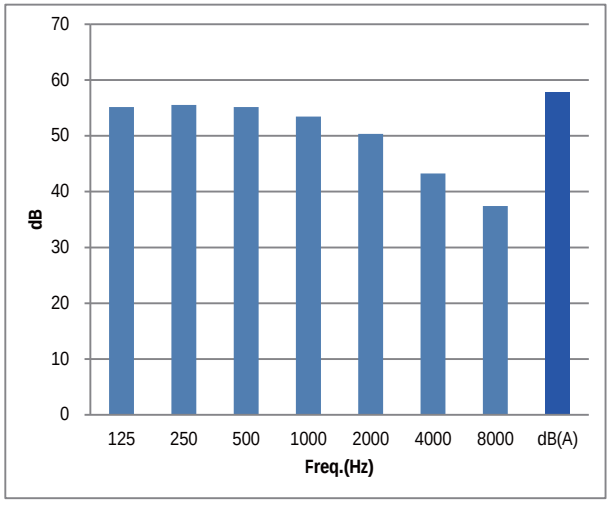

⑤ AR24KSPDBWKNEU

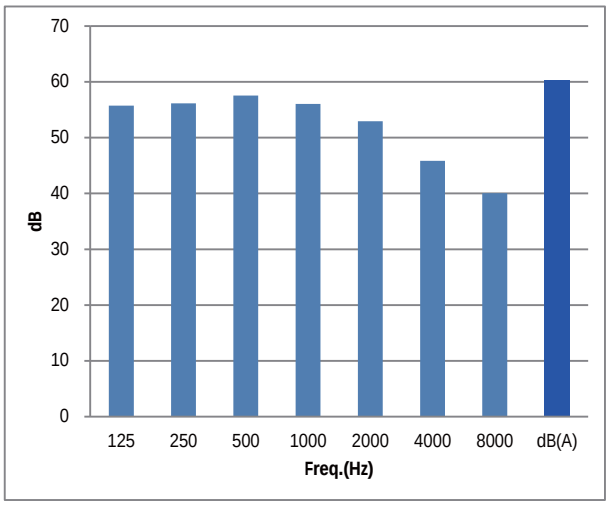

7 Sound power level

7-2. Indoor units - AR5680/5580

1) Operation sound power level

Unit : dB(A)

Model	Power
AR07KSWSBWKNEU	54
AR09KSWSBWKNET	54
AR12KSWSBWKNET	56
AR18KSWSAWKNEU	58
AR24KSWSAWKNEU	62
AR07KSWNAWKNEU	54
AR09KSWNAWKNET	54
AR12KSWNAWKNET	56
AR18KSWNAWKNEU	58
AR24KSWNAWKNEU	62

☑ Note

- dBA = A-Weighted sound power level.
- Reference power : 1pW
- Measured according to ISO 3741.

① AR07KSWSBWKNEU

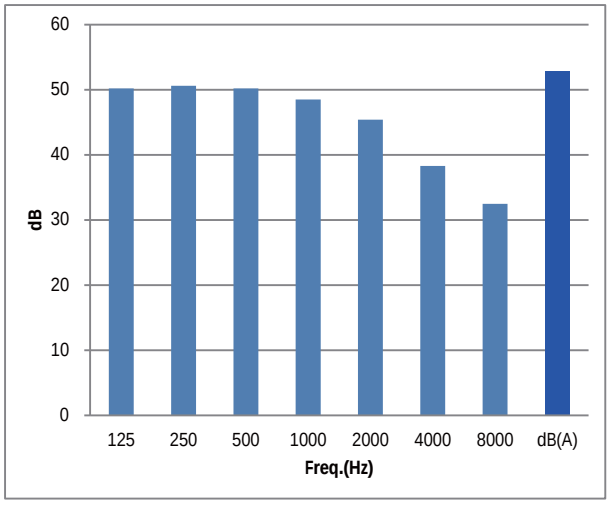

② AR07KSWNAWKNEU

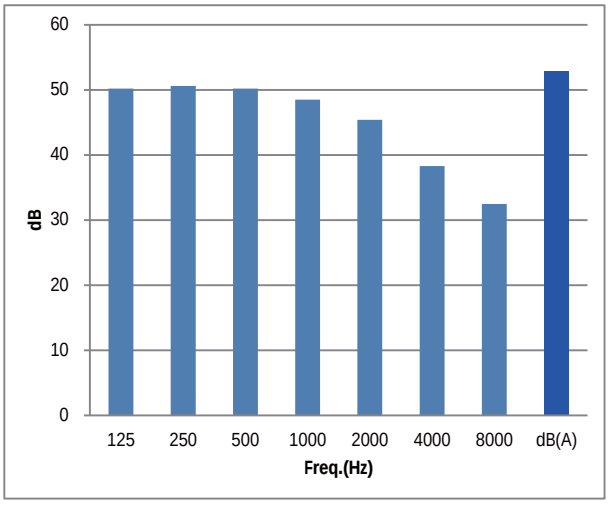

③ AR09KSWSBWKNET

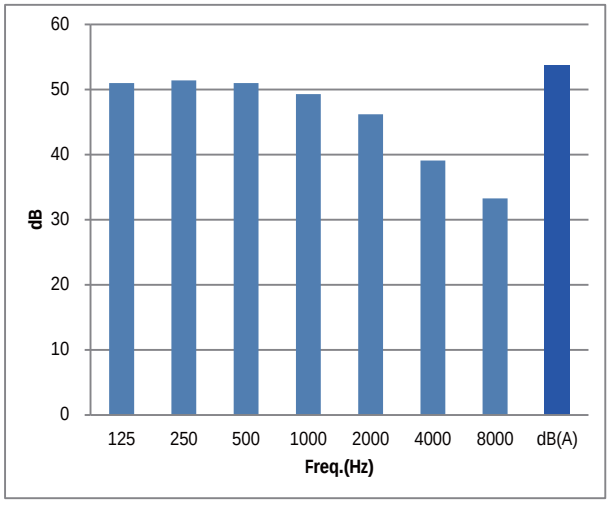

④ AR09KSWNAWKNET

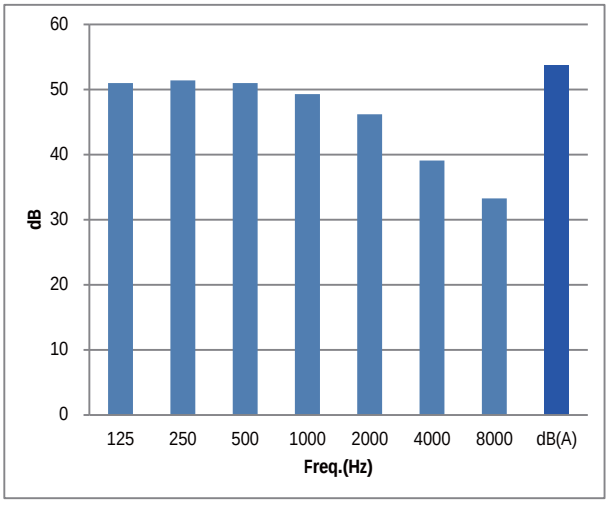

⑤ AR12KSWSBWKNET

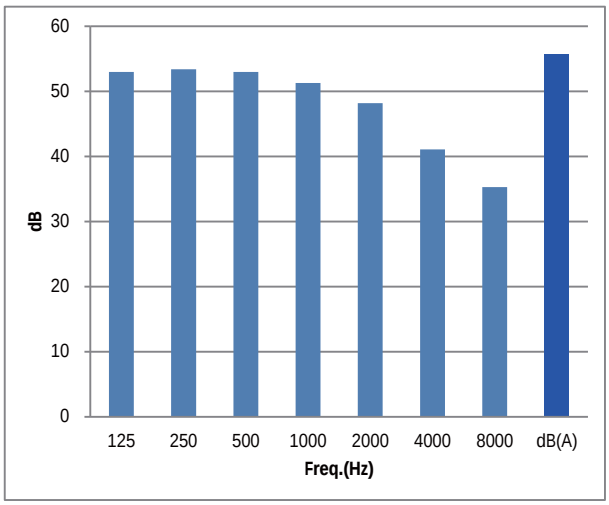

⑥ AR12KSWNAWKNET

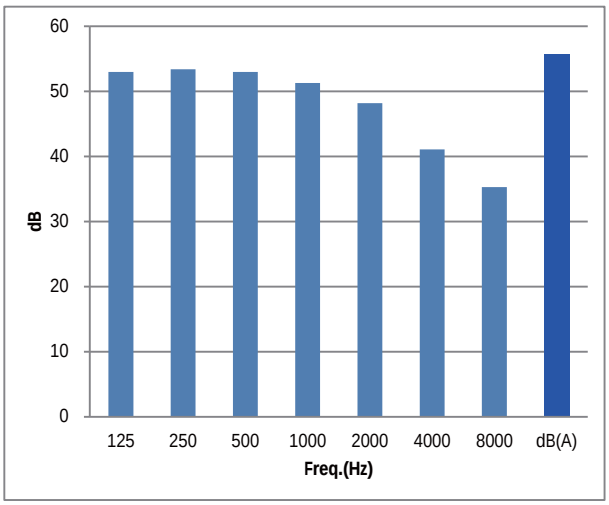

⑦ AR18KSWSAWKNEU

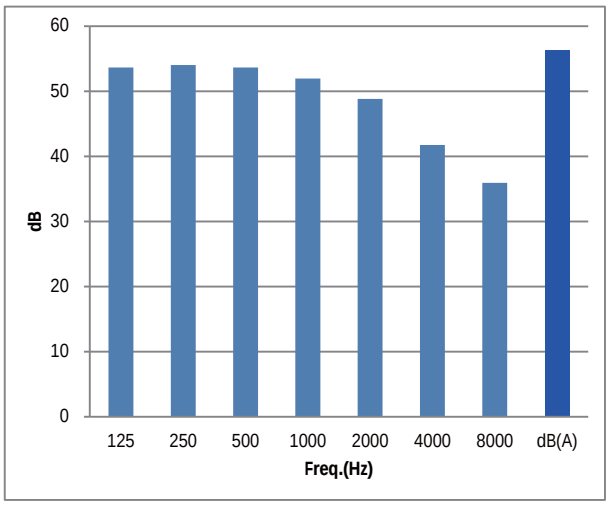

⑧ AR18KSWNAWKNEU

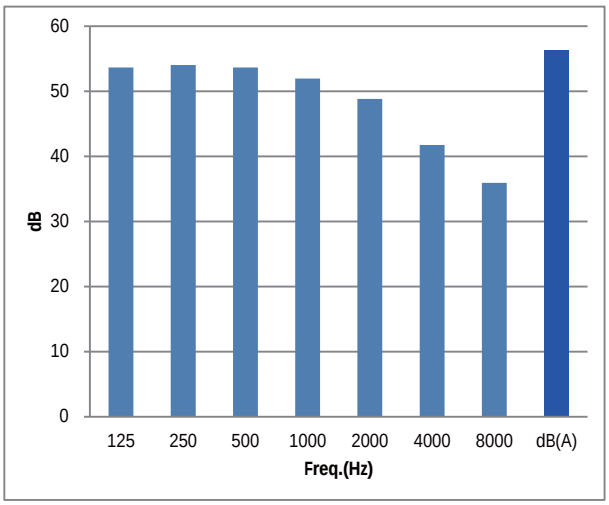

⑨ AR24KSWSAWKNEU

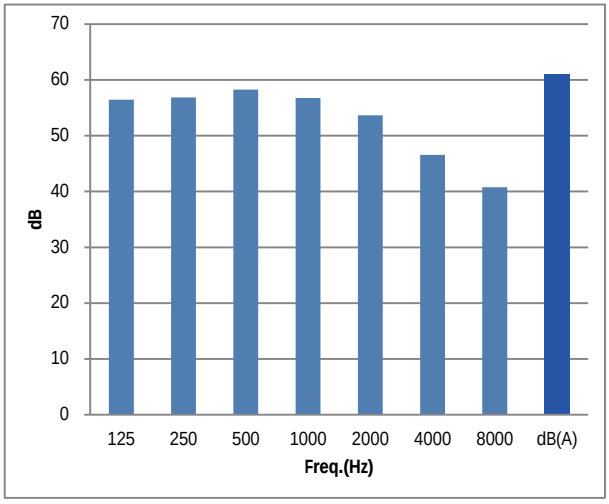

⑩ AR24KSWNAWKNEU

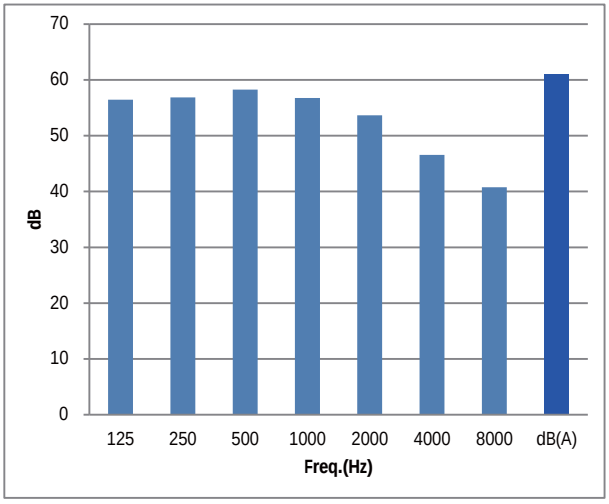

7 Sound power level

7-2. Indoor units - New Boracay

1) Operation sound power level

Unit : dB(A)

Model	Power
AR07KSFHBWKNEU	56
AR09KSFHBWKNET	56
AR12KSFHBWKNET	59
AR18KSFHBWKNEU	58
AR24KSFHBWKNEU	63

☑ Note

- dBA = A-Weighted sound power level.
- Reference power : 1pW
- Measured according to ISO 3741.

① AR07KSFHBWKNEU

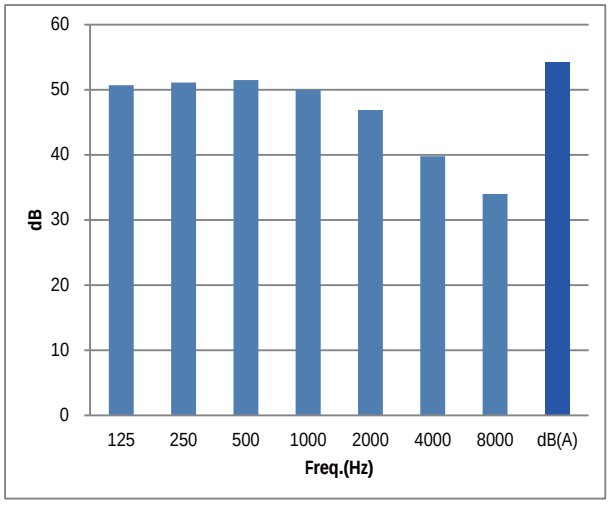

② AR09KSFHBWKNET

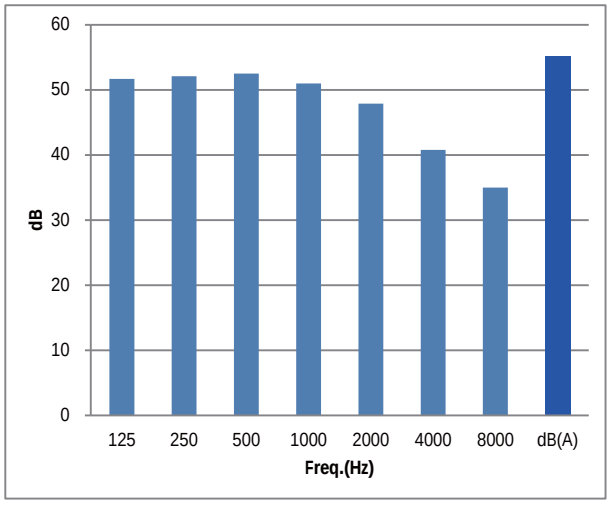

③ AR12KSFHBWKNET

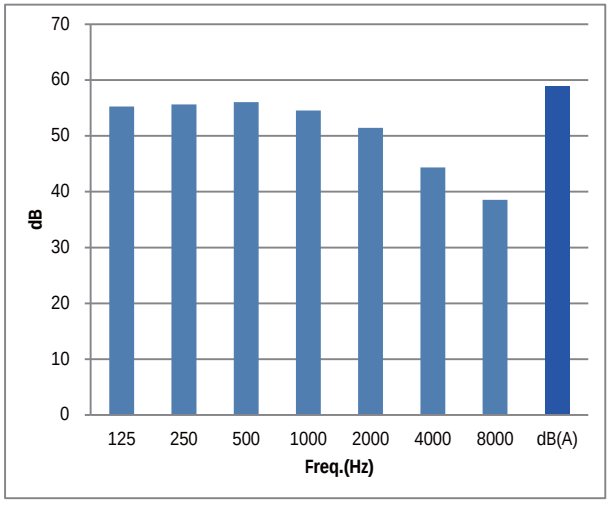

④ AR18KSFHBWKNEU

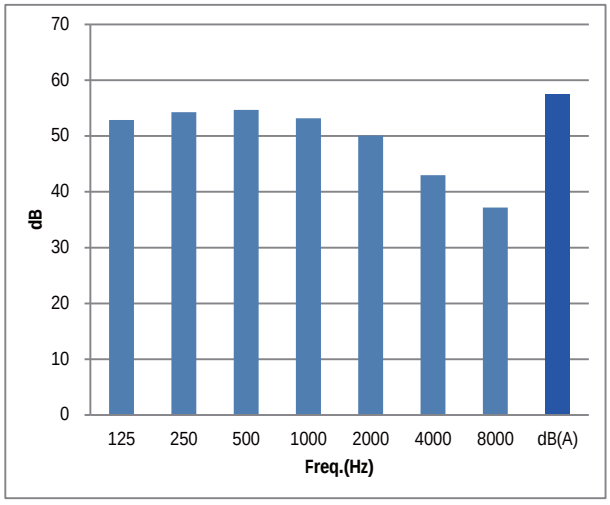

⑤ AR24KSFHBWKNEU

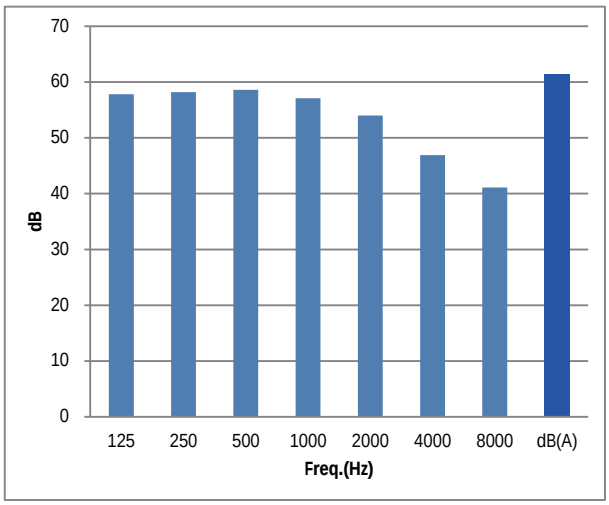

8 Operation limit

8-1. AJ040/050/052/060/070/080FCJ＊EH/EU

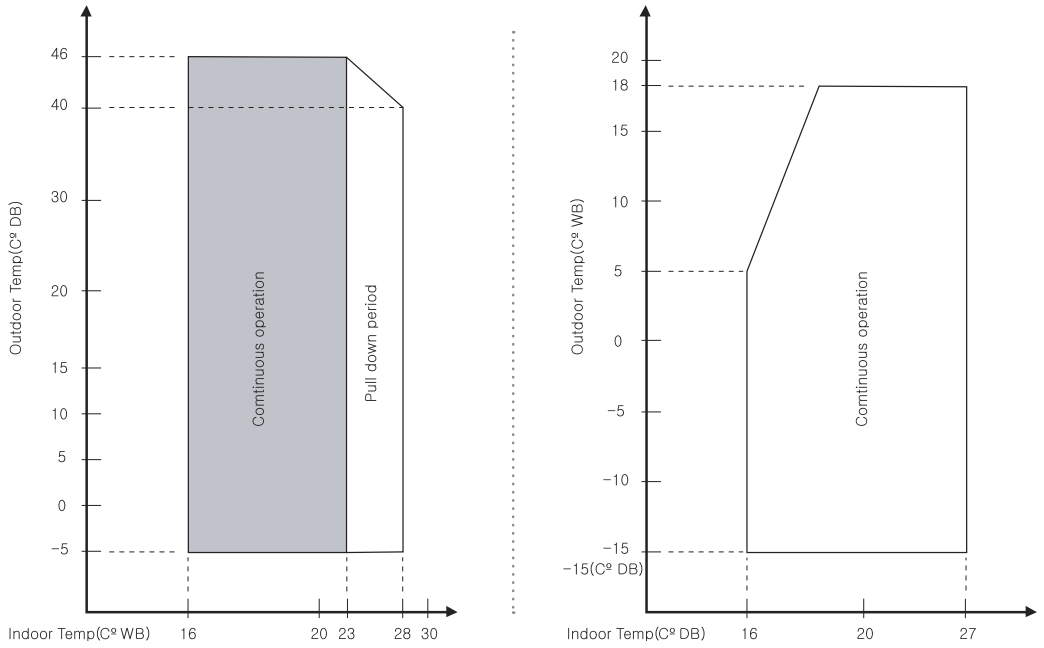

The graphs are based on the following conditions.

1. Equivalent piping length　　2. Level difference 0m　　3. Air flow rate High

AJ040FCJ2EH/EU / AJ050FCJ2EH/EU / AJ052FCJ3EH/EU / AJ068FCJ3EH/EU : 5m

AJ070FCJ4EH/EU / AJ080FCJ4EH/EU : 7.5m

8-2. AJ100FCJ5EH/EU

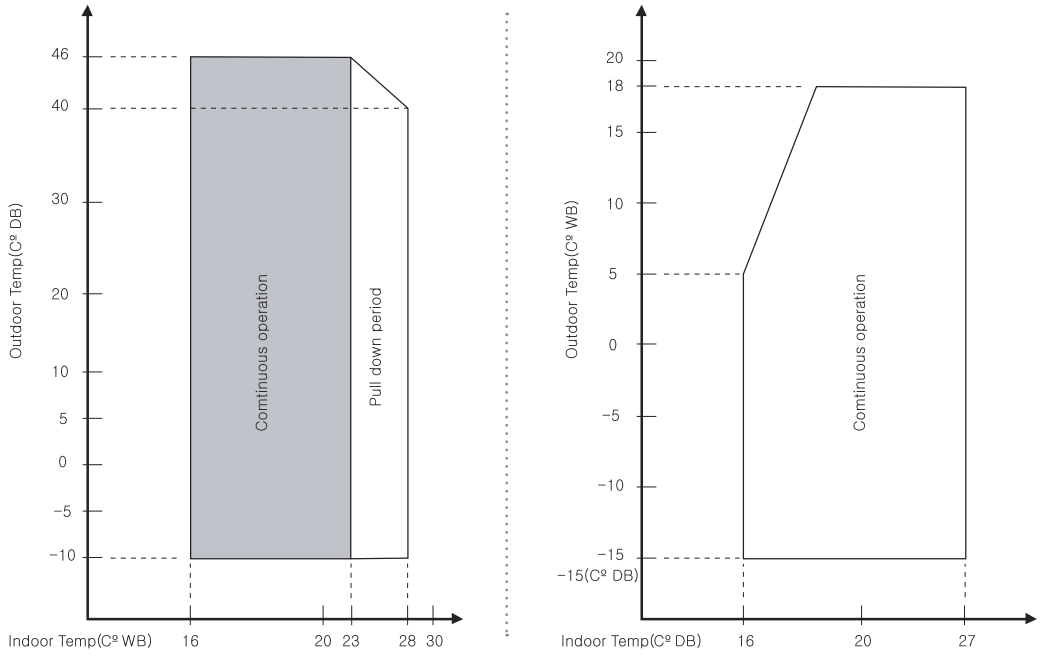

The graphs are based on the following conditions.

1. Equivalent piping length　　2. Level difference 0m　　3. Air flow rate High

AJ100FCJ5EH/EU : 5m

9 Recommended operation range(PQ Curve)

9-1. Slim Duct

1) NJ026LHXEA

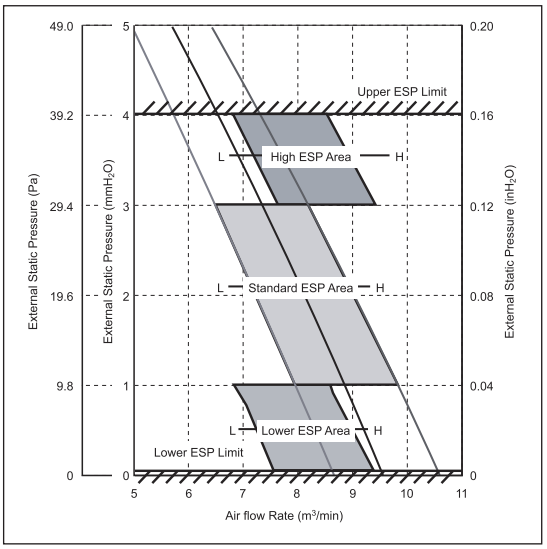

External Static Pressure (mmAq)	Option Code
0	015201-1400Fb-200000-300000
2	015201-14020c-200000-300000
4	015201-1403A2-200000-300000

2) NJ035LHXEA

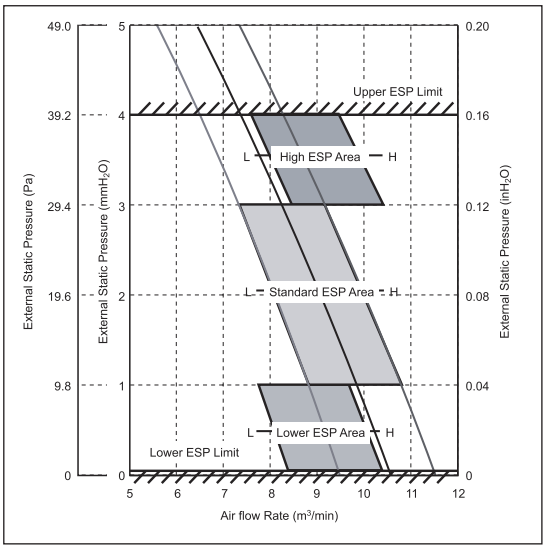

External Static Pressure (mmAq)	Option Code
0	015201-16025d-200000-300000
2	015201-16026E-200000-300000
4	015203-160108-200000-300000

9-2. MSP Duct

1) MH052FUEA

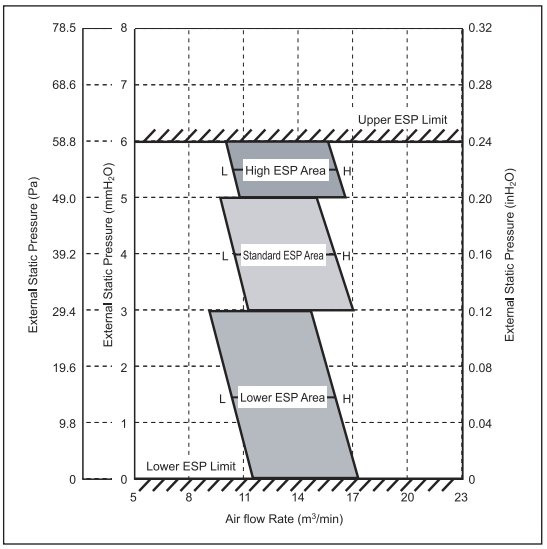

External Static Pressure (mmAq)	Option Code
2	012221-194360-200000-300000
4	012221-1943A2-200000-300000
6	012223-194105-200000-300000

☑ Note

- Adjust option code according to the actual installation condition (external static pressure).

10 Electric Characteristics

Model		Outdoor unit		Maximum Input Current [A]			Power Supply [A]	
		Rated		Outdoor	Indoor(Max.)	Total	MCA	MFA
Outdoor unit	Indoor unit	Hz	Volts					
AJ040FCJ2EH/EU	2	50	1Phase, 220~240	9	0.8	9.8	9.8	11.25
AJ050FCJ2EH/EU	2	50	1Phase, 220~240	11	0.8	11.8	11.8	13.75
AJ052FCJ3EH/EU	3	50	1Phase, 220~240	11	1.2	12.2	12.2	13.75
AJ068FCJ3EH/EU	3	50	1Phase, 220~240	14	1.5	15.5	15.5	17.5
AJ070FCJ4EH/EU	4	50	1Phase, 220~240	16.6	2.1	18.7	18.7	20.75
AJ080FCJ4EH/EU	4	50	1Phase, 220~240	16.6	2.1	18.7	18.7	20.75
AJ100FCJ5EH/EU	5	50	1Phase, 220~240	23	3.2	26.2	26.2	28.8

Specification for circuit breaker and power supply cord

≫ Power supply cord is not supplied with air conditioner.
≫ Select the power supply cord in accordance with relevant local and national regulations.
≫ Wire size must comply with the applicable local and national code.
≫ Specifications for local wiring power supply cord and branch wiring are in compliance with local cord.

Notes

1. Power Supply cords of parts of appliances for outdoor use shall not be lighter than polychloroprene sheathed flexible cord. (Code designation IEC:60245 IEC 57 / CENELEC: H05RN-F , IEC:60245 IEC 66 / CENELEC: H07RN-F)
2. Select power supply cord based on MCA.
3. MFA is used to select the circuit breaker and the ground fault circuit interrupter (earth leakage circuit breaker).
4. MCA represents maximum input current.
5. MFA represents capacity which may accept MCA.
6. The total length of the communication wire must not exceed 60m.Exceeding 60m may not satisfy the EN55014-1 standard.
7. Communication Cable Specification : 2G, 0.75mm², or more.

Abbreviations

- MCA : Min. Circuit Amps. (A)
- MFA : Max. Fuse Amps. (A)

FREE JOINT MULTI
CAPACITY TABLE

Contents



III. Capacity Table

1. AJ040FCJ2EH/EU
2. AJ050FCJ2EH/EU
3. AJ052FCJ3EH/EU
4. AJ068FCJ3EH/EU
5. AJ070FCJ4EH/EU
6. AJ080FCJ4EH/EU
7. AJ100FCJ5EH/EU

1 AJ040FCJ2EH

1) Cooling

COOLING

Combination (Capacity Index)					Combination (Total)	Combination (%)	Outdoor Temperature (°C, DB)	Indoor Temperature(°C, WB)													
								14		16		18		19		20		22		24	
								TC(kW)	PI(kW)	TC(kW)	PI(kW)	TC(kW)	PI(kW)	TC(kW)	PI(kW)	TC(kW)	PI(kW)	TC(kW)	PI(kW)	TC(kW)	PI(kW)
2000					2000	50%	10	1.68	0.31	2.43	0.35	2.54	0.38	2.59	0.39	2.64	0.40	2.74	0.42	2.85	0.44
							12	1.68	0.33	2.39	0.36	2.50	0.39	2.55	0.40	2.60	0.41	2.70	0.43	2.81	0.45
							14	1.68	0.34	2.36	0.37	2.46	0.40	2.51	0.41	2.56	0.42	2.66	0.44	2.76	0.45
							16	1.68	0.36	2.32	0.39	2.42	0.41	2.47	0.43	2.52	0.44	2.62	0.45	2.72	0.46
							18	1.68	0.37	2.28	0.40	2.38	0.43	2.43	0.44	2.48	0.45	2.58	0.46	2.68	0.47
							20	1.68	0.39	2.24	0.41	2.34	0.44	2.39	0.45	2.44	0.46	2.54	0.47	2.64	0.48
							21	1.68	0.39	2.22	0.42	2.32	0.45	2.37	0.46	2.42	0.46	2.52	0.48	2.62	0.49
							23	1.68	0.41	2.18	0.44	2.28	0.46	2.33	0.47	2.38	0.48	2.48	0.49	2.58	0.50
							25	1.68	0.42	2.15	0.45	2.24	0.47	2.29	0.48	2.34	0.49	2.44	0.50	2.54	0.51
							27	1.68	0.44	2.11	0.47	2.20	0.49	2.25	0.49	2.30	0.50	2.40	0.51	2.50	0.52
							29	1.68	0.46	2.07	0.48	2.17	0.50	2.21	0.51	2.26	0.51	2.36	0.52	2.46	0.53
							31	1.68	0.47	2.03	0.50	2.13	0.51	2.18	0.52	2.22	0.53	2.32	0.53	2.42	0.54
							33	1.68	0.49	1.99	0.51	2.09	0.53	2.14	0.53	2.19	0.54	2.28	0.55	2.38	0.55
							35	1.68	0.51	1.96	0.53	2.05	0.54	2.10	0.54	2.15	0.55	2.24	0.56	2.34	0.56
							37	1.68	0.52	1.92	0.54	2.01	0.56	2.06	0.56	2.11	0.57	2.20	0.57	2.30	0.57
							39	1.68	0.54	1.88	0.56	1.98	0.57	2.02	0.58	2.07	0.58	2.16	0.58	2.26	0.58
							42	1.66	0.57	1.83	0.58	1.92	0.59	1.97	0.60	2.01	0.60	2.11	0.60	2.20	0.60
							44	1.58	0.58	1.79	0.60	1.88	0.61	1.93	0.61	1.97	0.61	2.07	0.61	2.16	0.61
							46	1.53	0.60	1.75	0.62	1.84	0.62	1.89	0.63	1.94	0.63	2.03	0.63	2.12	0.62
2500					2500	63%	10	2.00	0.43	2.90	0.48	3.02	0.52	3.08	0.54	3.14	0.56	3.26	0.59	3.39	0.61
							12	2.00	0.45	2.85	0.50	2.97	0.54	3.03	0.56	3.09	0.57	3.22	0.60	3.34	0.62
							14	2.00	0.47	2.80	0.52	2.93	0.56	2.99	0.57	3.05	0.59	3.17	0.61	3.29	0.63
							16	2.00	0.49	2.76	0.54	2.88	0.57	2.94	0.59	3.00	0.60	3.12	0.63	3.24	0.64
							18	2.00	0.51	2.71	0.56	2.83	0.59	2.89	0.61	2.95	0.62	3.07	0.64	3.19	0.66
							20	2.00	0.54	2.67	0.58	2.79	0.61	2.85	0.62	2.90	0.64	3.02	0.66	3.14	0.67
							21	2.00	0.55	2.64	0.59	2.76	0.62	2.82	0.63	2.88	0.64	3.00	0.66	3.12	0.67
							23	2.00	0.57	2.60	0.61	2.72	0.64	2.78	0.65	2.83	0.66	2.95	0.68	3.07	0.69
							25	2.00	0.59	2.55	0.63	2.67	0.66	2.73	0.67	2.79	0.68	2.91	0.69	3.02	0.70
							27	2.00	0.61	2.51	0.65	2.62	0.67	2.68	0.69	2.74	0.69	2.86	0.71	2.98	0.72
							29	2.00	0.63	2.46	0.67	2.58	0.69	2.64	0.70	2.69	0.71	2.81	0.72	2.93	0.73
							31	2.00	0.66	2.42	0.69	2.53	0.71	2.59	0.72	2.65	0.73	2.76	0.74	2.88	0.74
							33	2.00	0.68	2.37	0.71	2.49	0.73	2.54	0.74	2.60	0.75	2.72	0.76	2.83	0.76
							35	2.00	0.70	2.33	0.73	2.44	0.75	2.50	0.75	2.56	0.77	2.67	0.77	2.78	0.77
							37	2.00	0.73	2.29	0.75	2.40	0.77	2.45	0.78	2.51	0.79	2.62	0.79	2.74	0.79
							39	2.00	0.75	2.24	0.77	2.35	0.79	2.41	0.80	2.46	0.80	2.58	0.81	2.69	0.81
							42	1.98	0.79	2.18	0.81	2.29	0.82	2.34	0.83	2.40	0.83	2.51	0.83	2.62	0.83
							44	1.88	0.81	2.13	0.83	2.24	0.85	2.30	0.85	2.35	0.85	2.46	0.85	2.57	0.85
							46	1.83	0.83	2.09	0.85	2.20	0.87	2.25	0.87	2.30	0.87	2.41	0.87	2.53	0.86
3500					3500	88%	10	2.80	0.61	4.06	0.68	4.23	0.74	4.31	0.77	4.40	0.79	4.57	0.83	4.74	0.86
							12	2.80	0.64	3.99	0.71	4.16	0.76	4.25	0.79	4.33	0.81	4.50	0.85	4.68	0.87
							14	2.80	0.67	3.93	0.73	4.10	0.79	4.18	0.81	4.26	0.83	4.44	0.87	4.61	0.89
							16	2.80	0.70	3.86	0.76	4.03	0.81	4.11	0.83	4.20	0.85	4.37	0.89	4.54	0.91
							18	2.80	0.73	3.80	0.79	3.96	0.84	4.05	0.86	4.13	0.88	4.30	0.91	4.47	0.93
							20	2.80	0.76	3.73	0.81	3.90	0.86	3.98	0.88	4.07	0.90	4.23	0.93	4.40	0.94
							21	2.80	0.77	3.70	0.83	3.87	0.87	3.95	0.89	4.03	0.91	4.20	0.94	4.37	0.95
							23	2.80	0.80	3.64	0.86	3.80	0.90	3.89	0.92	3.97	0.93	4.13	0.96	4.30	0.97
							25	2.80	0.83	3.58	0.88	3.74	0.93	3.82	0.94	3.90	0.96	4.07	0.98	4.23	0.99
							27	2.80	0.86	3.51	0.91	3.67	0.95	3.76	0.97	3.84	0.98	4.00	1.00	4.17	1.01
							29	2.80	0.89	3.45	0.94	3.61	0.98	3.69	0.99	3.77	1.01	3.93	1.02	4.10	1.03
							31	2.80	0.93	3.39	0.97	3.55	1.01	3.63	1.02	3.71	1.03	3.87	1.05	4.03	1.05
							33	2.80	0.96	3.32	1.00	3.48	1.03	3.56	1.05	3.64	1.06	3.80	1.07	3.97	1.07
							35	2.80	0.99	3.26	1.03	3.42	1.06	3.50	1.06	3.58	1.08	3.74	1.09	3.90	1.09
							37	2.80	1.03	3.20	1.06	3.36	1.09	3.43	1.10	3.51	1.11	3.67	1.12	3.83	1.12
							39	2.80	1.06	3.14	1.09	3.29	1.12	3.37	1.13	3.45	1.14	3.61	1.14	3.77	1.14
							42	2.77	1.11	3.05	1.14	3.20	1.17	3.28	1.17	3.35	1.18	3.51	1.18	3.67	1.17
							44	2.63	1.14	2.98	1.18	3.14	1.20	3.21	1.20	3.29	1.21	3.45	1.21	3.60	1.20
							46	2.56	1.18	2.92	1.21	3.07	1.23	3.15	1.23	3.23	1.23	3.38	1.23	3.54	1.22
2000	2000				4000	100%	10	3.53	0.83	4.99	0.85	5.08	0.87	5.14	0.88	5.20	0.89	5.35	0.91	5.52	0.93
							12	3.53	0.85	4.85	0.87	4.95	0.89	5.01	0.90	5.08	0.91	5.23	0.93	5.41	0.95
							14	3.53	0.87	4.72	0.89	4.83	0.91	4.89	0.92	4.96	0.93	5.12	0.95	5.31	0.97
							16	3.53	0.89	4.60	0.91	4.71	0.93	4.78	0.94	4.85	0.95	5.02	0.97	5.21	0.99
							18	3.53	0.92	4.48	0.94	4.60	0.96	4.67	0.97	4.75	0.98	4.92	0.99	5.12	1.01
							20	3.53	0.94	4.36	0.96	4.49	0.98	4.57	0.99	4.65	1.00	4.83	1.02	5.03	1.04
							21	3.53	0.95	4.31	0.97	4.44	0.99	4.52	1.00	4.60	1.01	4.78	1.03	4.99	1.05
							23	3.53	0.98	4.20	1.00	4.34	1.02	4.42	1.03	4.51	1.03	4.70	1.05	4.91	1.07
							25	3.53	1.00	4.10	1.02	4.25	1.04	4.33	1.05	4.42	1.06	4.62	1.08	4.84	1.10
							27	3.53	1.03	4.01	1.05	4.16	1.07	4.25	1.08	4.34	1.08	4.55	1.10	4.78	1.12
							29	3.53	1.05	3.92	1.07	4.08	1.09	4.17	1.10	4.27	1.11	4.48	1.13	4.72	1.15
							31	3.53	1.08	3.84	1.10	4.01	1.12	4.10	1.13	4.20	1.14	4.42	1.16	4.66	1.17
							33	3.53	1.11	3.76	1.13	3.94	1.15	4.03	1.16	4.13	1.16	4.36	1.18	4.61	1.20
							35	3.53	1.13	3.69	1.15	3.87	1.17	4.00	1.18	4.08	1.19	4.31	1.21	4.57	1.23
							37	3.53	1.16	3.62	1.18	3.81	1.20	3.91	1.21	4.02	1.22	4.26	1.24	4.53	1.26
							39	3.53	1.19	3.56	1.21	3.76	1.23	3.86	1.24	3.98	1.25	4.22	1.27	4.49	1.28
							42	3.53	1.24	3.48	1.26	3.69	1.28	3.80	1.29	3.92	1.29	4.17	1.31	4.46	1.33
							44	3.53	1.27	3.44	1.29	3.65	1.31	3.76	1.32	3.89	1.32	4.15	1.34	4.44	1.36
							46	3.53	1.30	3.39	1.32	3.61	1.34	3.73	1.35	3.86	1.36	4.13	1.37	4.42	1.39

* All figures comply with EN14511

1. Cooling capacity is based on 27°CDB / 19°CWB (indoor temperature), 35°CDB (outdoor temperature).
2. Heating capacity is based on 20°CDB (indoor temperature), 7°CDB/6°CWB (outdoor temperature).
3. Capacities are based on the following conditions : - Corresponding refrigerant piping length : 5m / - Level difference : 0m
4. The total ability of connected a indoor unit is up to 6.0kW
5. It is impossible to connect the indoor unit for one room only.
6. This data is reference data for temperature capacity trend.

1) Cooling

COOLING

Combination (Capacity Index)					Combination (Total)	Combination (%)	Outdoor Temperature (°C, DB)	Indoor Temperature(°C, WB)													
								14		16		18		19		20		22		24	
								TC(kW)	PI(kW)	TC(kW)	PI(kW)	TC(kW)	PI(kW)	TC(kW)	PI(kW)	TC(kW)	PI(kW)	TC(kW)	PI(kW)	TC(kW)	PI(kW)
2000	2500				4500	113%	10	3.53	0.83	4.99	0.85	5.08	0.87	5.14	0.88	5.20	0.89	5.35	0.91	5.52	0.93
							12	3.53	0.85	4.85	0.87	4.95	0.89	5.01	0.90	5.08	0.91	5.23	0.93	5.41	0.95
							14	3.53	0.87	4.72	0.89	4.83	0.91	4.89	0.92	4.96	0.93	5.12	0.95	5.31	0.97
							16	3.53	0.89	4.60	0.91	4.71	0.93	4.78	0.94	4.85	0.95	5.02	0.97	5.21	0.99
							18	3.53	0.92	4.48	0.94	4.60	0.96	4.67	0.97	4.75	0.98	4.92	0.99	5.12	1.01
							20	3.53	0.94	4.36	0.96	4.49	0.98	4.57	0.99	4.65	1.00	4.83	1.02	5.03	1.04
							21	3.53	0.95	4.31	0.97	4.44	0.99	4.52	1.00	4.60	1.01	4.78	1.03	4.99	1.05
							23	3.53	0.98	4.20	1.00	4.34	1.02	4.42	1.03	4.51	1.03	4.70	1.05	4.91	1.07
							25	3.53	1.00	4.10	1.02	4.25	1.04	4.33	1.05	4.42	1.06	4.62	1.08	4.84	1.10
							27	3.53	1.03	4.01	1.05	4.16	1.07	4.25	1.08	4.34	1.08	4.55	1.10	4.78	1.12
							29	3.53	1.05	3.92	1.07	4.08	1.09	4.17	1.10	4.27	1.11	4.48	1.13	4.72	1.15
							31	3.53	1.08	3.84	1.10	4.01	1.12	4.10	1.13	4.20	1.14	4.42	1.16	4.66	1.17
							33	3.53	1.11	3.76	1.13	3.94	1.15	4.03	1.16	4.13	1.16	4.36	1.18	4.61	1.20
							35	3.53	1.13	3.69	1.15	3.87	1.17	4.00	1.18	4.08	1.19	4.31	1.21	4.57	1.23
							37	3.53	1.16	3.62	1.18	3.81	1.20	3.91	1.21	4.02	1.22	4.26	1.24	4.53	1.26
							39	3.53	1.19	3.56	1.21	3.76	1.23	3.86	1.24	3.98	1.25	4.22	1.27	4.49	1.28
							42	3.53	1.24	3.48	1.26	3.69	1.28	3.80	1.29	3.92	1.29	4.17	1.31	4.46	1.33
							44	3.53	1.27	3.44	1.29	3.65	1.31	3.76	1.32	3.89	1.32	4.15	1.34	4.44	1.36
							46	3.53	1.30	3.39	1.32	3.61	1.34	3.73	1.35	3.86	1.36	4.13	1.37	4.42	1.39
2000	3500				5500	138%	10	3.53	0.83	4.99	0.85	5.08	0.87	5.14	0.88	5.20	0.89	5.35	0.91	5.52	0.93
							12	3.53	0.85	4.85	0.87	4.95	0.89	5.01	0.90	5.08	0.91	5.23	0.93	5.41	0.95
							14	3.53	0.87	4.72	0.89	4.83	0.91	4.89	0.92	4.96	0.93	5.12	0.95	5.31	0.97
							16	3.53	0.89	4.60	0.91	4.71	0.93	4.78	0.94	4.85	0.95	5.02	0.97	5.21	0.99
							18	3.53	0.92	4.48	0.94	4.60	0.96	4.67	0.97	4.75	0.98	4.92	0.99	5.12	1.01
							20	3.53	0.94	4.36	0.96	4.49	0.98	4.57	0.99	4.65	1.00	4.83	1.02	5.03	1.04
							21	3.53	0.95	4.31	0.97	4.44	0.99	4.52	1.00	4.60	1.01	4.78	1.03	4.99	1.05
							23	3.53	0.98	4.20	1.00	4.34	1.02	4.42	1.03	4.51	1.03	4.70	1.05	4.91	1.07
							25	3.53	1.00	4.10	1.02	4.25	1.04	4.33	1.05	4.42	1.06	4.62	1.08	4.84	1.10
							27	3.53	1.03	4.01	1.05	4.16	1.07	4.25	1.08	4.34	1.08	4.55	1.10	4.78	1.12
							29	3.53	1.05	3.92	1.07	4.08	1.09	4.17	1.10	4.27	1.11	4.48	1.13	4.72	1.15
							31	3.53	1.08	3.84	1.10	4.01	1.12	4.10	1.13	4.20	1.14	4.42	1.16	4.66	1.17
							33	3.53	1.11	3.76	1.13	3.94	1.15	4.03	1.16	4.13	1.16	4.36	1.18	4.61	1.20
							35	3.53	1.13	3.69	1.15	3.87	1.17	4.00	1.18	4.08	1.19	4.31	1.21	4.57	1.23
							37	3.53	1.16	3.62	1.18	3.81	1.20	3.91	1.21	4.02	1.22	4.26	1.24	4.53	1.26
							39	3.53	1.19	3.56	1.21	3.76	1.23	3.86	1.24	3.98	1.25	4.22	1.27	4.49	1.28
							42	3.53	1.24	3.48	1.26	3.69	1.28	3.80	1.29	3.92	1.29	4.17	1.31	4.46	1.33
							44	3.53	1.27	3.44	1.29	3.65	1.31	3.76	1.32	3.89	1.32	4.15	1.34	4.44	1.36
							46	3.53	1.30	3.39	1.32	3.61	1.34	3.73	1.35	3.86	1.36	4.13	1.37	4.42	1.39
2600	2500				5100	128%	10	3.53	0.83	4.99	0.85	5.08	0.87	5.14	0.88	5.20	0.89	5.35	0.91	5.52	0.93
							12	3.53	0.85	4.85	0.87	4.95	0.89	5.01	0.90	5.08	0.91	5.23	0.93	5.41	0.95
							14	3.53	0.87	4.72	0.89	4.83	0.91	4.89	0.92	4.96	0.93	5.12	0.95	5.31	0.97
							16	3.53	0.89	4.60	0.91	4.71	0.93	4.78	0.94	4.85	0.95	5.02	0.97	5.21	0.99
							18	3.53	0.92	4.48	0.94	4.60	0.96	4.67	0.97	4.75	0.98	4.92	0.99	5.12	1.01
							20	3.53	0.94	4.36	0.96	4.49	0.98	4.57	0.99	4.65	1.00	4.83	1.02	5.03	1.04
							21	3.53	0.95	4.31	0.97	4.44	0.99	4.52	1.00	4.60	1.01	4.78	1.03	4.99	1.05
							23	3.53	0.98	4.20	1.00	4.34	1.02	4.42	1.03	4.51	1.03	4.70	1.05	4.91	1.07
							25	3.53	1.00	4.10	1.02	4.25	1.04	4.33	1.05	4.42	1.06	4.62	1.08	4.84	1.10
							27	3.53	1.03	4.01	1.05	4.16	1.07	4.25	1.08	4.34	1.08	4.55	1.10	4.78	1.12
							29	3.53	1.05	3.92	1.07	4.08	1.09	4.17	1.10	4.27	1.11	4.48	1.13	4.72	1.15
							31	3.53	1.08	3.84	1.10	4.01	1.12	4.10	1.13	4.20	1.14	4.42	1.16	4.66	1.17
							33	3.53	1.11	3.76	1.13	3.94	1.15	4.03	1.16	4.13	1.16	4.36	1.18	4.61	1.20
							35	3.53	1.13	3.69	1.15	3.87	1.17	4.00	1.18	4.08	1.19	4.31	1.21	4.57	1.23
							37	3.53	1.16	3.62	1.18	3.81	1.20	3.91	1.21	4.02	1.22	4.26	1.24	4.53	1.26
							39	3.53	1.19	3.56	1.21	3.76	1.23	3.86	1.24	3.98	1.25	4.22	1.27	4.49	1.28
							42	3.53	1.24	3.48	1.26	3.69	1.28	3.80	1.29	3.92	1.29	4.17	1.31	4.46	1.33
							44	3.53	1.27	3.44	1.29	3.65	1.31	3.76	1.32	3.89	1.32	4.15	1.34	4.44	1.36
							46	3.53	1.30	3.39	1.32	3.61	1.34	3.73	1.35	3.86	1.36	4.13	1.37	4.42	1.39
2500	3500				6000	150%	10	3.53	0.70	4.99	0.71	5.08	0.73	5.14	0.74	5.20	0.75	5.35	0.76	5.52	0.78
							12	3.53	0.71	4.85	0.73	4.95	0.75	5.01	0.76	5.08	0.76	5.23	0.78	5.41	0.79
							14	3.53	0.73	4.72	0.75	4.83	0.77	4.89	0.77	4.96	0.78	5.12	0.80	5.31	0.81
							16	3.53	0.75	4.60	0.77	4.71	0.78	4.78	0.79	4.85	0.80	5.02	0.82	5.21	0.83
							18	3.53	0.77	4.48	0.79	4.60	0.80	4.67	0.81	4.75	0.82	4.92	0.83	5.12	0.85
							20	3.53	0.79	4.36	0.81	4.49	0.82	4.57	0.83	4.65	0.84	4.83	0.85	5.03	0.87
							21	3.53	0.80	4.31	0.82	4.44	0.83	4.52	0.84	4.60	0.85	4.78	0.86	4.99	0.88
							23	3.53	0.82	4.20	0.84	4.34	0.85	4.42	0.86	4.51	0.87	4.70	0.88	4.91	0.90
							25	3.53	0.84	4.10	0.86	4.25	0.87	4.33	0.88	4.42	0.89	4.62	0.90	4.84	0.92
							27	3.53	0.86	4.01	0.88	4.16	0.89	4.25	0.90	4.34	0.91	4.55	0.93	4.78	0.94
							29	3.53	0.88	3.92	0.90	4.08	0.92	4.17	0.92	4.27	0.93	4.48	0.95	4.72	0.96
							31	3.53	0.91	3.84	0.92	4.01	0.94	4.10	0.95	4.20	0.95	4.42	0.97	4.66	0.98
							33	3.53	0.93	3.76	0.94	3.94	0.96	4.03	0.97	4.13	0.98	4.36	0.99	4.61	1.01
							35	3.53	0.95	3.69	0.97	3.87	0.98	4.00	0.99	4.08	1.00	4.31	1.02	4.57	1.03
							37	3.53	0.98	3.62	0.99	3.81	1.01	3.91	1.02	4.02	1.02	4.26	1.04	4.53	1.05
							39	3.53	1.00	3.56	1.02	3.76	1.03	3.86	1.04	3.98	1.05	4.22	1.06	4.49	1.08
							42	3.53	1.04	3.48	1.05	3.69	1.07	3.80	1.08	3.92	1.09	4.17	1.10	4.46	1.11
							44	3.53	1.06	3.44	1.08	3.65	1.10	3.76	1.10	3.89	1.11	4.15	1.13	4.44	1.14
							46	3.53	1.09	3.39	1.11	3.61	1.12	3.73	1.13	3.86	1.14	4.13	1.15	4.42	1.17

* All figures comply with EN14511

1. Cooling capacity is based on 27°CDB / 19°CWB (indoor temperature), 35°CDB (outdoor temperature).
2. Heating capacity is based on 20°CDB (indoor temperature), 7°CDB/6°CWB (outdoor temperature).
3. Capacities are based on the following conditions : - Corresponding refrigerant piping length : 5m / - Level difference : 0m
4. The total ability of connected a indoor unit is up to 6.0kW
5. It is impossible to connect the indoor unit for one room only.
6. This data is reference data for temperature capacity trend.

1 AJ040FCJ2EH

2) Heating

HEATING

Combination (Capacity Index)					Combination (Total)	Combination (%)	Outdoor Temperature (°C, DB)	Indoor Temperature(°C, WB)													
								14		16		18		20		21		22		24	
								TC(kW)	PI(kW)	TC(kW)	PI(kW)	TC(kW)	PI(kW)	TC(kW)	PI(kW)	TC(kW)	PI(kW)	TC(kW)	PI(kW)	TC(kW)	PI(kW)
2000					2000	50%	-15	1.37	0.62	1.33	0.63	1.29	0.64	1.28	0.64	1.26	0.64	1.23	0.65	1.21	0.66
							-10	1.65	0.65	1.60	0.66	1.56	0.67	1.54	0.67	1.52	0.68	1.49	0.69	1.47	0.69
							-5	1.92	0.68	1.87	0.69	1.83	0.70	1.81	0.71	1.79	0.71	1.75	0.72	1.73	0.73
							0	2.19	0.72	2.14	0.73	2.09	0.74	2.07	0.74	2.05	0.75	2.02	0.75	1.99	0.76
							2	2.30	0.73	2.25	0.74	2.20	0.75	2.18	0.75	2.16	0.76	2.12	0.77	2.09	0.77
							7	2.52	0.75	2.46	0.77	2.42	0.78	2.40	0.78	2.37	0.79	2.33	0.79	2.30	0.80
							10	2.74	0.78	2.68	0.79	2.63	0.80	2.61	0.81	2.59	0.81	2.54	0.82	2.51	0.83
							15	3.01	0.81	2.95	0.82	2.90	0.83	2.88	0.84	2.85	0.84	2.81	0.85	2.77	0.86
2500					2500	63%	-15	1.77	0.68	1.72	0.69	1.67	0.69	1.65	0.70	1.63	0.70	1.59	0.71	1.56	0.72
							-10	2.13	0.71	2.07	0.72	2.01	0.73	1.99	0.74	1.97	0.74	1.93	0.75	1.89	0.75
							-5	2.48	0.75	2.42	0.76	2.36	0.77	2.33	0.77	2.31	0.78	2.27	0.78	2.23	0.79
							0	2.83	0.78	2.76	0.79	2.71	0.80	2.68	0.81	2.65	0.81	2.61	0.82	2.57	0.83
							2	2.97	0.79	2.90	0.81	2.84	0.82	2.82	0.82	2.79	0.83	2.74	0.84	2.70	0.84
							7	3.25	0.82	3.18	0.83	3.12	0.85	3.10	0.85	3.06	0.86	3.01	0.87	2.97	0.87
							10	3.54	0.85	3.46	0.86	3.40	0.87	3.37	0.88	3.34	0.88	3.29	0.89	3.24	0.90
							15	3.89	0.88	3.81	0.90	3.75	0.91	3.71	0.92	3.68	0.92	3.63	0.93	3.58	0.94
3500					3500	88%	-15	2.18	0.87	2.11	0.89	2.05	0.90	2.02	0.90	1.99	0.91	1.95	0.92	1.91	0.93
							-10	2.61	0.92	2.53	0.93	2.47	0.95	2.44	0.95	2.41	0.96	2.36	0.97	2.32	0.97
							-5	3.04	0.97	2.96	0.98	2.89	0.99	2.86	1.00	2.83	1.00	2.78	1.01	2.73	1.02
							0	3.47	1.01	3.39	1.03	3.32	1.04	3.28	1.05	3.25	1.05	3.19	1.06	3.14	1.07
							2	3.64	1.03	3.56	1.04	3.49	1.06	3.45	1.06	3.42	1.07	3.36	1.08	3.31	1.09
							7	3.99	1.06	3.90	1.08	3.83	1.09	3.80	1.10	3.76	1.11	3.69	1.12	3.64	1.13
							10	4.33	1.10	4.25	1.12	4.17	1.13	4.13	1.14	4.09	1.15	4.03	1.16	3.97	1.17
							15	4.77	1.14	4.68	1.16	4.59	1.18	4.55	1.18	4.52	1.19	4.45	1.20	4.38	1.22
2000	2000				4000	100%	-15	2.52	0.92	2.44	0.94	2.37	0.95	2.34	0.95	2.31	0.96	2.26	0.97	2.21	0.98
							-10	3.02	0.97	2.93	0.98	2.86	1.00	2.82	1.00	2.79	1.01	2.74	1.02	2.69	1.03
							-5	3.52	1.02	3.43	1.03	3.35	1.05	3.31	1.05	3.28	1.06	3.22	1.07	3.16	1.08
							0	4.02	1.07	3.92	1.08	3.84	1.10	3.80	1.10	3.76	1.11	3.70	1.12	3.64	1.13
							2	4.22	1.08	4.12	1.10	4.04	1.12	4.00	1.12	3.96	1.13	3.89	1.14	3.83	1.15
							7	4.62	1.12	4.52	1.14	4.43	1.15	4.40	1.16	4.35	1.17	4.28	1.18	4.21	1.19
							10	5.02	1.16	4.92	1.18	4.82	1.19	4.78	1.20	4.74	1.21	4.66	1.22	4.60	1.23
							15	5.52	1.21	5.41	1.22	5.32	1.24	5.27	1.25	5.23	1.26	5.15	1.27	5.08	1.28
2000	2500				4500	113%	-15	2.52	0.92	2.44	0.94	2.37	0.95	2.34	0.95	2.31	0.96	2.26	0.97	2.21	0.98
							-10	3.02	0.97	2.93	0.98	2.86	1.00	2.82	1.00	2.79	1.01	2.74	1.02	2.69	1.03
							-5	3.52	1.02	3.43	1.03	3.35	1.05	3.31	1.05	3.28	1.06	3.22	1.07	3.16	1.08
							0	4.02	1.07	3.92	1.08	3.84	1.10	3.80	1.10	3.76	1.11	3.70	1.12	3.64	1.13
							2	4.22	1.08	4.12	1.10	4.04	1.12	4.00	1.12	3.96	1.13	3.89	1.14	3.83	1.15
							7	4.62	1.12	4.52	1.14	4.43	1.15	4.40	1.16	4.35	1.17	4.28	1.18	4.21	1.19
							10	5.02	1.16	4.92	1.18	4.82	1.19	4.78	1.20	4.74	1.21	4.66	1.22	4.60	1.23
							15	5.52	1.21	5.41	1.22	5.32	1.24	5.27	1.25	5.23	1.26	5.15	1.27	5.08	1.28
2000	3500				5500	138%	-15	2.52	0.92	2.44	0.94	2.37	0.95	2.34	0.95	2.31	0.96	2.26	0.97	2.21	0.98
							-10	3.02	0.97	2.93	0.98	2.86	1.00	2.82	1.00	2.79	1.01	2.74	1.02	2.69	1.03
							-5	3.52	1.02	3.43	1.03	3.35	1.05	3.31	1.05	3.28	1.06	3.22	1.07	3.16	1.08
							0	4.02	1.07	3.92	1.08	3.84	1.10	3.80	1.10	3.76	1.11	3.70	1.12	3.64	1.13
							2	4.22	1.08	4.12	1.10	4.04	1.12	4.00	1.12	3.96	1.13	3.89	1.14	3.83	1.15
							7	4.62	1.12	4.52	1.14	4.43	1.15	4.40	1.16	4.35	1.17	4.28	1.18	4.21	1.19
							10	5.02	1.16	4.92	1.18	4.82	1.19	4.78	1.20	4.74	1.21	4.66	1.22	4.60	1.23
							15	5.52	1.21	5.41	1.22	5.32	1.24	5.27	1.25	5.23	1.26	5.15	1.27	5.08	1.28
2500	2500				5000	125%	-15	2.52	0.92	2.44	0.94	2.37	0.95	2.34	0.95	2.31	0.96	2.26	0.97	2.21	0.98
							-10	3.02	0.97	2.93	0.98	2.86	1.00	2.82	1.00	2.79	1.01	2.74	1.02	2.69	1.03
							-5	3.52	1.02	3.43	1.03	3.35	1.05	3.31	1.05	3.28	1.06	3.22	1.07	3.16	1.08
							0	4.02	1.07	3.92	1.08	3.84	1.10	3.80	1.10	3.76	1.11	3.70	1.12	3.64	1.13
							2	4.22	1.08	4.12	1.10	4.04	1.12	4.00	1.12	3.96	1.13	3.89	1.14	3.83	1.15
							7	4.62	1.12	4.52	1.14	4.43	1.15	4.40	1.16	4.35	1.17	4.28	1.18	4.21	1.19
							10	5.02	1.16	4.92	1.18	4.82	1.19	4.78	1.20	4.74	1.21	4.66	1.22	4.60	1.23
							15	5.52	1.21	5.41	1.22	5.32	1.24	5.27	1.25	5.23	1.26	5.15	1.27	5.08	1.28
2500	3500				6000	150%	-15	2.52	0.79	2.44	0.80	2.37	0.81	2.34	0.81	2.31	0.82	2.26	0.83	2.21	0.83
							-10	3.02	0.83	2.93	0.84	2.86	0.85	2.82	0.86	2.79	0.86	2.74	0.87	2.69	0.88
							-5	3.52	0.87	3.43	0.88	3.35	0.89	3.31	0.90	3.28	0.90	3.22	0.91	3.16	0.92
							0	4.02	0.91	3.92	0.92	3.84	0.94	3.80	0.94	3.76	0.95	3.70	0.96	3.64	0.97
							2	4.22	0.93	4.12	0.94	4.04	0.95	4.00	0.96	3.96	0.96	3.89	0.97	3.83	0.98
							7	4.62	0.96	4.52	0.97	4.43	0.99	4.40	0.99	4.35	1.00	4.28	1.01	4.21	1.02
							10	5.02	0.99	4.92	1.00	4.82	1.02	4.78	1.02	4.74	1.03	4.66	1.04	4.60	1.05
							15	5.52	1.03	5.41	1.05	5.32	1.06	5.27	1.07	5.23	1.07	5.15	1.08	5.08	1.09

* All figures comply with EN14511

1. Cooling capacity is based on 27°CDB / 19°CWB (indoor temperature), 35°CDB (outdoor temperature).
2. Heating capacity is based on 20°CDB (indoor temperature), 7°CDB/6°CWB (outdoor temperature).
3. Capacities are based on the following conditions : - Corresponding refrigerant piping length : 5m / - Level difference : 0m
4. The total ability of connected a indoor unit is up to 6.0kW
5. It is impossible to connect the indoor unit for one room only.
6. This data is reference data for temperature capacity trend.

2 AJ050FCJ2EH

1) Cooling

COOLING

Combination (Capacity Index)	Combination (Total)	Combination (%)	Outdoor Temperature (°C, DB)	Indoor Temperature(°C, WB)													
				14		16		18		19		20		22		24	
				TC(kW)	PI(kW)	TC(kW)	PI(kW)	TC(kW)	PI(kW)	TC(kW)	PI(kW)	TC(kW)	PI(kW)	TC(kW)	PI(kW)	TC(kW)	PI(kW)
2000	2000	38%	10	1.92	0.42	2.78	0.47	2.90	0.51	2.96	0.53	3.02	0.54	3.13	0.57	3.25	0.59
			12	1.92	0.44	2.74	0.49	2.85	0.53	2.91	0.54	2.97	0.56	3.09	0.58	3.21	0.60
			14	1.92	0.46	2.69	0.51	2.81	0.54	2.87	0.56	2.92	0.57	3.04	0.60	3.16	0.61
			16	1.92	0.48	2.65	0.52	2.76	0.56	2.82	0.57	2.88	0.59	3.00	0.61	3.11	0.63
			18	1.92	0.50	2.60	0.54	2.72	0.58	2.78	0.59	2.83	0.60	2.95	0.62	3.07	0.64
			20	1.92	0.52	2.56	0.56	2.67	0.59	2.73	0.61	2.79	0.62	2.90	0.64	3.02	0.65
			21	1.92	0.53	2.54	0.57	2.65	0.60	2.71	0.62	2.77	0.63	2.88	0.65	3.00	0.66
			23	1.92	0.55	2.50	0.59	2.61	0.62	2.66	0.63	2.72	0.64	2.83	0.66	2.95	0.67
			25	1.92	0.57	2.45	0.61	2.56	0.64	2.62	0.65	2.68	0.66	2.79	0.67	2.90	0.68
			27	1.92	0.59	2.41	0.63	2.52	0.66	2.58	0.67	2.63	0.68	2.74	0.69	2.86	0.70
			29	1.92	0.62	2.37	0.65	2.48	0.67	2.53	0.68	2.59	0.69	2.70	0.71	2.81	0.71
			31	1.92	0.64	2.32	0.67	2.43	0.69	2.49	0.70	2.54	0.71	2.65	0.72	2.76	0.72
			33	1.92	0.66	2.28	0.69	2.39	0.71	2.44	0.72	2.50	0.73	2.61	0.74	2.72	0.74
			35	1.92	0.68	2.24	0.71	2.34	0.73	2.40	0.73	2.45	0.75	2.56	0.75	2.67	0.75
			37	1.92	0.71	2.19	0.73	2.30	0.75	2.36	0.76	2.41	0.76	2.52	0.77	2.63	0.77
			39	1.92	0.73	2.15	0.75	2.26	0.77	2.31	0.78	2.37	0.78	2.47	0.79	2.58	0.78
			42	1.90	0.76	2.09	0.79	2.19	0.80	2.25	0.81	2.30	0.81	2.41	0.81	2.51	0.81
			44	1.80	0.79	2.05	0.81	2.15	0.82	2.20	0.83	2.26	0.83	2.36	0.83	2.47	0.82
			46	1.75	0.81	2.00	0.83	2.11	0.84	2.16	0.85	2.21	0.85	2.32	0.85	2.42	0.84
2500	2500	48%	10	2.00	0.46	2.90	0.52	3.02	0.56	3.08	0.58	3.14	0.60	3.26	0.63	3.39	0.65
			12	2.00	0.48	2.85	0.53	2.97	0.58	3.03	0.60	3.09	0.61	3.22	0.64	3.34	0.66
			14	2.00	0.51	2.80	0.55	2.93	0.60	2.99	0.61	3.05	0.63	3.17	0.65	3.29	0.67
			16	2.00	0.53	2.76	0.57	2.88	0.61	2.94	0.63	3.00	0.65	3.12	0.67	3.24	0.69
			18	2.00	0.55	2.71	0.59	2.83	0.63	2.89	0.65	2.95	0.66	3.07	0.68	3.19	0.70
			20	2.00	0.57	2.67	0.61	2.79	0.65	2.85	0.67	2.90	0.68	3.02	0.70	3.14	0.71
			21	2.00	0.58	2.64	0.62	2.76	0.66	2.82	0.67	2.88	0.69	3.00	0.71	3.12	0.72
			23	2.00	0.61	2.60	0.65	2.72	0.68	2.78	0.69	2.83	0.71	2.95	0.72	3.07	0.73
			25	2.00	0.63	2.55	0.67	2.67	0.70	2.73	0.71	2.79	0.72	2.91	0.74	3.02	0.75
			27	2.00	0.65	2.51	0.69	2.62	0.72	2.68	0.73	2.74	0.74	2.86	0.76	2.98	0.76
			29	2.00	0.68	2.46	0.71	2.58	0.74	2.64	0.75	2.69	0.76	2.81	0.77	2.93	0.78
			31	2.00	0.70	2.42	0.73	2.53	0.76	2.59	0.77	2.65	0.78	2.76	0.79	2.88	0.79
			33	2.00	0.72	2.37	0.76	2.49	0.78	2.54	0.79	2.60	0.80	2.72	0.81	2.83	0.81
			35	2.00	0.75	2.33	0.78	2.44	0.80	2.50	0.80	2.56	0.82	2.67	0.83	2.78	0.83
			37	2.00	0.77	2.29	0.80	2.40	0.82	2.45	0.83	2.51	0.84	2.62	0.84	2.74	0.84
			39	2.00	0.80	2.24	0.83	2.35	0.85	2.41	0.85	2.46	0.86	2.58	0.86	2.69	0.86
			42	1.98	0.84	2.18	0.86	2.29	0.88	2.34	0.88	2.40	0.89	2.51	0.89	2.62	0.88
			44	1.88	0.86	2.13	0.89	2.24	0.90	2.30	0.91	2.35	0.91	2.46	0.91	2.57	0.90
			46	1.83	0.89	2.09	0.91	2.20	0.93	2.25	0.93	2.30	0.93	2.41	0.93	2.53	0.92
3500	3500	67%	10	2.80	0.63	4.06	0.70	4.23	0.76	4.31	0.79	4.40	0.81	4.57	0.85	4.74	0.88
			12	2.80	0.66	3.99	0.73	4.16	0.79	4.25	0.81	4.33	0.83	4.50	0.87	4.68	0.90
			14	2.80	0.69	3.93	0.75	4.10	0.81	4.18	0.83	4.26	0.86	4.44	0.89	4.61	0.92
			16	2.80	0.72	3.86	0.78	4.03	0.84	4.11	0.86	4.20	0.88	4.37	0.91	4.54	0.93
			18	2.80	0.75	3.80	0.81	3.96	0.86	4.05	0.88	4.13	0.90	4.30	0.93	4.47	0.95
			20	2.80	0.78	3.73	0.84	3.90	0.89	3.98	0.91	4.07	0.92	4.23	0.95	4.40	0.97
			21	2.80	0.79	3.70	0.85	3.87	0.90	3.95	0.92	4.03	0.94	4.20	0.96	4.37	0.98
			23	2.80	0.82	3.64	0.88	3.80	0.93	3.89	0.94	3.97	0.96	4.13	0.99	4.30	1.00
			25	2.80	0.86	3.58	0.91	3.74	0.95	3.82	0.97	3.90	0.99	4.07	1.01	4.23	1.02
			27	2.80	0.89	3.51	0.94	3.67	0.98	3.76	1.00	3.84	1.01	4.00	1.03	4.17	1.04
			29	2.80	0.92	3.45	0.97	3.61	1.01	3.69	1.02	3.77	1.04	3.93	1.05	4.10	1.06
			31	2.80	0.95	3.39	1.00	3.55	1.04	3.63	1.05	3.71	1.06	3.87	1.08	4.03	1.08
			33	2.80	0.99	3.32	1.03	3.48	1.06	3.56	1.08	3.64	1.09	3.80	1.10	3.97	1.10
			35	2.80	1.02	3.26	1.06	3.42	1.09	3.50	1.09	3.58	1.11	3.74	1.12	3.90	1.12
			37	2.80	1.05	3.20	1.09	3.36	1.12	3.43	1.13	3.51	1.14	3.67	1.15	3.83	1.15
			39	2.80	1.09	3.14	1.13	3.29	1.15	3.37	1.16	3.45	1.17	3.61	1.17	3.77	1.17
			42	2.77	1.14	3.05	1.17	3.20	1.20	3.28	1.21	3.35	1.21	3.51	1.21	3.67	1.21
			44	2.63	1.18	2.98	1.21	3.14	1.23	3.21	1.24	3.29	1.24	3.45	1.24	3.60	1.23
			46	2.56	1.21	2.92	1.24	3.07	1.26	3.15	1.27	3.23	1.27	3.38	1.27	3.54	1.25
5000	5000	96%	10	4.00	0.93	5.79	1.03	6.04	1.12	6.16	1.16	6.28	1.19	6.53	1.25	6.78	1.30
			12	4.00	0.97	5.70	1.07	5.94	1.15	6.07	1.19	6.19	1.23	6.43	1.28	6.68	1.32
			14	4.00	1.01	5.61	1.11	5.85	1.19	5.97	1.23	6.09	1.26	6.34	1.31	6.58	1.35
			16	4.00	1.05	5.52	1.15	5.76	1.23	5.88	1.26	6.00	1.29	6.24	1.34	6.48	1.37
			18	4.00	1.10	5.43	1.19	5.66	1.26	5.78	1.30	5.90	1.32	6.14	1.37	6.39	1.40
			20	4.00	1.14	5.34	1.23	5.57	1.30	5.69	1.33	5.81	1.36	6.05	1.40	6.29	1.43
			21	4.00	1.16	5.29	1.25	5.53	1.32	5.64	1.35	5.76	1.38	6.00	1.41	6.24	1.44
			23	4.00	1.21	5.20	1.29	5.43	1.36	5.55	1.39	5.67	1.41	5.91	1.45	6.14	1.47
			25	4.00	1.26	5.11	1.33	5.34	1.40	5.46	1.42	5.57	1.45	5.81	1.48	6.05	1.50
			27	4.00	1.30	5.02	1.38	5.25	1.44	5.37	1.46	5.48	1.48	5.72	1.51	5.95	1.53
			29	4.00	1.35	4.93	1.42	5.16	1.48	5.27	1.50	5.39	1.52	5.62	1.55	5.86	1.56
			31	4.00	1.40	4.84	1.47	5.07	1.52	5.18	1.54	5.30	1.56	5.53	1.58	5.76	1.59
			33	4.00	1.45	4.75	1.51	4.98	1.56	5.09	1.58	5.20	1.60	5.43	1.61	5.66	1.62
			35	4.00	1.50	4.66	1.56	4.89	1.60	5.00	1.60	5.11	1.64	5.34	1.65	5.57	1.65
			37	4.00	1.55	4.57	1.61	4.79	1.65	4.91	1.66	5.02	1.67	5.25	1.69	5.47	1.68
			39	4.00	1.60	4.48	1.65	4.70	1.69	4.82	1.71	4.93	1.72	5.15	1.72	5.38	1.72
			42	3.95	1.68	4.35	1.72	4.57	1.76	4.68	1.77	4.79	1.78	5.01	1.78	5.24	1.77
			44	3.75	1.73	4.26	1.77	4.48	1.80	4.59	1.81	4.70	1.82	4.92	1.82	5.14	1.80
			46	3.65	1.78	4.18	1.82	4.39	1.85	4.50	1.86	4.61	1.86	4.83	1.86	5.05	1.84

* All figures comply with EN14511

1. Cooling capacity is based on 27°CDB / 19°CWB (indoor temperature), 35°CDB (outdoor temperature).
2. Heating capacity is based on 20°CDB (indoor temperature), 7°CDB/6°CWB (outdoor temperature).
3. Capacities are based on the following conditions : - Corresponding refrigerant piping length : 5m / - Level difference : 0m
4. The total ability of connected a indoor unit is up to 8.5kW
5. It is impossible to connect the indoor unit for one room only.
6. This data is reference data for temperature capacity trend.

2 AJ050FCJ2EH

1) Cooling

COOLING

Combination (Capacity Index)					Combination (Total)	Combination (%)	Outdoor Temperature (°C, DB)	Indoor Temperature(°C, WB)													
								14		16		18		19		20		22		24	
								TC(kW)	PI(kW)	TC(kW)	PI(kW)	TC(kW)	PI(kW)	TC(kW)	PI(kW)	TC(kW)	PI(kW)	TC(kW)	PI(kW)	TC(kW)	PI(kW)
2000	2000				4000	77%	10	3.53	0.87	4.99	0.90	5.08	0.92	5.14	0.93	5.20	0.94	5.35	0.96	5.52	0.98
							12	3.53	0.90	4.85	0.92	4.95	0.94	5.01	0.95	5.08	0.96	5.23	0.98	5.41	1.00
							14	3.53	0.92	4.72	0.94	4.83	0.96	4.89	0.97	4.96	0.98	5.12	1.00	5.31	1.02
							16	3.53	0.94	4.60	0.96	4.71	0.99	4.78	1.00	4.85	1.01	5.02	1.03	5.21	1.04
							18	3.53	0.97	4.48	0.99	4.60	1.01	4.67	1.02	4.75	1.03	4.92	1.05	5.12	1.07
							20	3.53	0.99	4.36	1.01	4.49	1.03	4.57	1.04	4.65	1.05	4.83	1.07	5.03	1.09
							21	3.53	1.00	4.31	1.03	4.44	1.05	4.52	1.06	4.60	1.07	4.78	1.09	4.99	1.10
							23	3.53	1.03	4.20	1.05	4.34	1.07	4.42	1.08	4.51	1.09	4.70	1.11	4.91	1.13
							25	3.53	1.06	4.10	1.08	4.25	1.10	4.33	1.11	4.42	1.12	4.62	1.14	4.84	1.16
							27	3.53	1.08	4.01	1.10	4.16	1.12	4.25	1.13	4.34	1.14	4.55	1.16	4.78	1.18
							29	3.53	1.11	3.92	1.13	4.08	1.15	4.17	1.16	4.27	1.17	4.48	1.19	4.72	1.21
							31	3.53	1.14	3.84	1.16	4.01	1.18	4.10	1.19	4.20	1.20	4.42	1.22	4.66	1.24
							33	3.53	1.17	3.76	1.19	3.94	1.21	4.03	1.22	4.13	1.23	4.36	1.25	4.61	1.27
							35	3.53	1.20	3.69	1.22	3.87	1.24	4.00	1.25	4.08	1.26	4.31	1.28	4.57	1.29
							37	3.53	1.23	3.62	1.25	3.81	1.27	3.91	1.28	4.02	1.29	4.26	1.31	4.53	1.32
							39	3.53	1.26	3.56	1.28	3.76	1.30	3.86	1.31	3.98	1.32	4.22	1.34	4.49	1.35
							42	3.53	1.31	3.48	1.33	3.69	1.35	3.80	1.36	3.92	1.37	4.17	1.38	4.46	1.40
							44	3.53	1.34	3.44	1.36	3.65	1.38	3.76	1.39	3.89	1.40	4.15	1.42	4.44	1.43
							46	3.53	1.37	3.39	1.39	3.61	1.41	3.73	1.42	3.86	1.43	4.13	1.45	4.42	1.47
2000	2500				4500	87%	10	4.07	1.00	5.73	1.03	5.84	1.05	5.91	1.07	5.98	1.08	6.15	1.10	6.34	1.12
							12	4.07	1.03	5.58	1.06	5.69	1.08	5.76	1.09	5.84	1.10	6.02	1.13	6.22	1.15
							14	4.07	1.06	5.43	1.08	5.55	1.11	5.63	1.12	5.71	1.13	5.89	1.15	6.10	1.17
							16	4.07	1.08	5.29	1.11	5.42	1.13	5.50	1.14	5.58	1.16	5.77	1.18	5.99	1.20
							18	4.07	1.11	5.15	1.14	5.29	1.16	5.37	1.17	5.46	1.18	5.66	1.21	5.89	1.23
							20	4.07	1.14	5.02	1.16	5.17	1.19	5.25	1.20	5.34	1.21	5.55	1.23	5.79	1.25
							21	4.07	1.15	4.96	1.18	5.11	1.20	5.19	1.21	5.29	1.22	5.50	1.25	5.74	1.27
							23	4.07	1.18	4.83	1.21	4.99	1.23	5.09	1.24	5.18	1.25	5.40	1.28	5.65	1.30
							25	4.07	1.21	4.72	1.24	4.89	1.26	4.98	1.27	5.09	1.28	5.31	1.31	5.57	1.33
							27	4.07	1.24	4.61	1.27	4.79	1.29	4.89	1.30	4.99	1.31	5.23	1.34	5.49	1.36
							29	4.07	1.27	4.51	1.30	4.69	1.32	4.80	1.33	4.91	1.35	5.15	1.37	5.42	1.39
							31	4.07	1.31	4.42	1.33	4.61	1.36	4.71	1.37	4.83	1.38	5.08	1.40	5.36	1.42
							33	4.07	1.34	4.33	1.36	4.53	1.39	4.64	1.40	4.76	1.41	5.01	1.43	5.30	1.45
							35	4.07	1.37	4.24	1.40	4.45	1.42	4.60	1.43	4.69	1.44	4.96	1.47	5.25	1.49
							37	4.07	1.41	4.17	1.43	4.38	1.46	4.50	1.47	4.63	1.48	4.90	1.50	5.21	1.52
							39	4.07	1.44	4.10	1.47	4.32	1.49	4.44	1.50	4.57	1.51	4.86	1.54	5.17	1.56
							42	4.07	1.50	4.01	1.52	4.24	1.55	4.37	1.56	4.51	1.57	4.80	1.59	5.12	1.61
							44	4.07	1.54	3.95	1.56	4.20	1.58	4.33	1.59	4.47	1.61	4.77	1.63	5.10	1.65
							46	4.07	1.57	3.90	1.60	4.16	1.62	4.29	1.63	4.44	1.64	4.75	1.66	5.09	1.68
2000	3500				5500	106%	10	4.42	1.05	6.23	1.07	6.35	1.10	6.42	1.11	6.50	1.12	6.68	1.15	6.90	1.17
							12	4.42	1.07	6.06	1.10	6.19	1.12	6.27	1.14	6.35	1.15	6.54	1.17	6.76	1.20
							14	4.42	1.10	5.90	1.13	6.04	1.15	6.12	1.16	6.20	1.18	6.40	1.20	6.63	1.22
							16	4.42	1.13	5.75	1.15	5.89	1.18	5.97	1.19	6.06	1.20	6.27	1.23	6.51	1.25
							18	4.42	1.16	5.60	1.18	5.75	1.21	5.84	1.22	5.93	1.23	6.15	1.26	6.40	1.28
							20	4.42	1.19	5.45	1.21	5.62	1.24	5.71	1.25	5.81	1.26	6.03	1.28	6.29	1.31
							21	4.42	1.20	5.39	1.23	5.55	1.25	5.65	1.26	5.75	1.28	5.98	1.30	6.24	1.32
							23	4.42	1.23	5.25	1.26	5.43	1.28	5.53	1.29	5.63	1.31	5.87	1.33	6.14	1.35
							25	4.42	1.26	5.13	1.29	5.31	1.31	5.42	1.33	5.53	1.34	5.77	1.36	6.05	1.38
							27	4.42	1.30	5.01	1.32	5.20	1.35	5.31	1.36	5.43	1.37	5.68	1.39	5.97	1.41
							29	4.42	1.33	4.90	1.35	5.10	1.38	5.21	1.39	5.33	1.40	5.60	1.43	5.89	1.45
							31	4.42	1.36	4.80	1.39	5.01	1.41	5.12	1.42	5.25	1.44	5.52	1.46	5.82	1.48
							33	4.42	1.40	4.70	1.42	4.92	1.45	5.04	1.46	5.17	1.47	5.45	1.49	5.76	1.51
							35	4.42	1.43	4.61	1.46	4.84	1.48	5.00	1.49	5.10	1.51	5.39	1.53	5.71	1.55
							37	4.42	1.47	4.53	1.49	4.76	1.52	4.89	1.53	5.03	1.54	5.33	1.56	5.66	1.59
							39	4.42	1.51	4.45	1.53	4.70	1.55	4.83	1.57	4.97	1.58	5.28	1.60	5.62	1.62
							42	4.42	1.56	4.35	1.59	4.61	1.61	4.75	1.62	4.90	1.63	5.22	1.66	5.57	1.68
							44	4.42	1.60	4.30	1.63	4.56	1.65	4.70	1.66	4.86	1.67	5.18	1.70	5.55	1.72
							46	4.42	1.64	4.24	1.67	4.52	1.69	4.67	1.70	4.82	1.71	5.16	1.73	5.53	1.76
2000	5000				7000	135%	10	4.42	1.02	6.23	1.04	6.35	1.07	6.42	1.08	6.50	1.09	6.68	1.12	6.90	1.14
							12	4.42	1.04	6.06	1.07	6.19	1.09	6.27	1.11	6.35	1.12	6.54	1.14	6.76	1.16
							14	4.42	1.07	5.90	1.10	6.04	1.12	6.12	1.13	6.20	1.14	6.40	1.17	6.63	1.19
							16	4.42	1.10	5.75	1.12	5.89	1.15	5.97	1.16	6.06	1.17	6.27	1.19	6.51	1.22
							18	4.42	1.13	5.60	1.15	5.75	1.18	5.84	1.19	5.93	1.20	6.15	1.22	6.40	1.24
							20	4.42	1.15	5.45	1.18	5.62	1.20	5.71	1.22	5.81	1.23	6.03	1.25	6.29	1.27
							21	4.42	1.17	5.39	1.19	5.55	1.22	5.65	1.23	5.75	1.24	5.98	1.26	6.24	1.29
							23	4.42	1.20	5.25	1.22	5.43	1.25	5.53	1.26	5.63	1.27	5.87	1.29	6.14	1.32
							25	4.42	1.23	5.13	1.25	5.31	1.28	5.42	1.29	5.53	1.30	5.77	1.32	6.05	1.35
							27	4.42	1.26	5.01	1.29	5.20	1.31	5.31	1.32	5.43	1.33	5.68	1.36	5.97	1.38
							29	4.42	1.29	4.90	1.32	5.10	1.34	5.21	1.35	5.33	1.36	5.60	1.39	5.89	1.41
							31	4.42	1.33	4.80	1.35	5.01	1.37	5.12	1.39	5.25	1.40	5.52	1.42	5.82	1.44
							33	4.42	1.36	4.70	1.38	4.92	1.41	5.04	1.42	5.17	1.43	5.45	1.45	5.76	1.47
							35	4.42	1.39	4.61	1.42	4.84	1.44	5.00	1.45	5.10	1.46	5.39	1.49	5.71	1.51
							37	4.42	1.43	4.53	1.45	4.76	1.48	4.89	1.49	5.03	1.50	5.33	1.52	5.66	1.54
							39	4.42	1.46	4.45	1.49	4.70	1.51	4.83	1.52	4.97	1.54	5.28	1.56	5.62	1.58
							42	4.42	1.52	4.35	1.54	4.61	1.57	4.75	1.58	4.90	1.59	5.22	1.61	5.57	1.63
							44	4.42	1.56	4.30	1.58	4.56	1.61	4.70	1.62	4.86	1.63	5.18	1.65	5.55	1.67
							46	4.42	1.60	4.24	1.62	4.52	1.64	4.67	1.66	4.82	1.67	5.16	1.69	5.53	1.71

* All figures comply with EN14511

1. Cooling capacity is based on 27°CDB / 19°CWB (indoor temperature), 35°CDB (outdoor temperature).
2. Heating capacity is based on 20°CDB (indoor temperature), 7°CDB/6°CWB (outdoor temperature).
3. Capacities are based on the following conditions : - Corresponding refrigerant piping length : 5m / - Level difference : 0m
4. The total ability of connected a indoor unit is up to 8.5kW
5. It is impossible to connect the indoor unit for one room only.
6. This data is reference data for temperature capacity trend.

1) Cooling

COOLING

Combination (Capacity Index)					Combination (Total)	Combination (%)	Outdoor Temperature (°C, DB)	Indoor Temperature(°C, WB)													
								14		16		18		19		20		22		24	
								TC(kW)	PI(kW)	TC(kW)	PI(kW)	TC(kW)	PI(kW)	TC(kW)	PI(kW)	TC(kW)	PI(kW)	TC(kW)	PI(kW)	TC(kW)	PI(kW)
2500	2500				5000	96%	10	4.42	1.05	6.23	1.08	6.35	1.11	6.42	1.12	6.50	1.13	6.68	1.16	6.90	1.18
							12	4.42	1.08	6.06	1.11	6.19	1.13	6.27	1.14	6.35	1.16	6.54	1.18	6.76	1.20
							14	4.42	1.11	5.90	1.13	6.04	1.16	6.12	1.17	6.20	1.18	6.40	1.21	6.63	1.23
							16	4.42	1.14	5.75	1.16	5.89	1.19	5.97	1.20	6.06	1.21	6.27	1.24	6.51	1.26
							18	4.42	1.16	5.60	1.19	5.75	1.22	5.84	1.23	5.93	1.24	6.15	1.26	6.40	1.29
							20	4.42	1.19	5.45	1.22	5.62	1.25	5.71	1.26	5.81	1.27	6.03	1.29	6.29	1.32
							21	4.42	1.21	5.39	1.24	5.55	1.26	5.65	1.27	5.75	1.28	5.98	1.31	6.24	1.33
							23	4.42	1.24	5.25	1.27	5.43	1.29	5.53	1.30	5.63	1.32	5.87	1.34	6.14	1.36
							25	4.42	1.27	5.13	1.30	5.31	1.32	5.42	1.33	5.53	1.35	5.77	1.37	6.05	1.39
							27	4.42	1.30	5.01	1.33	5.20	1.35	5.31	1.37	5.43	1.38	5.68	1.40	5.97	1.42
							29	4.42	1.34	4.90	1.36	5.10	1.39	5.21	1.40	5.33	1.41	5.60	1.43	5.89	1.46
							31	4.42	1.37	4.80	1.40	5.01	1.42	5.12	1.43	5.25	1.45	5.52	1.47	5.82	1.49
							33	4.42	1.41	4.70	1.43	4.92	1.46	5.04	1.47	5.17	1.48	5.45	1.50	5.76	1.52
							35	4.42	1.44	4.61	1.47	4.84	1.49	5.00	1.50	5.10	1.52	5.39	1.54	5.71	1.56
							37	4.42	1.48	4.53	1.50	4.76	1.53	4.89	1.54	5.03	1.55	5.33	1.57	5.66	1.60
							39	4.42	1.52	4.45	1.54	4.70	1.56	4.83	1.58	4.97	1.59	5.28	1.61	5.62	1.63
							42	4.42	1.57	4.35	1.60	4.61	1.62	4.75	1.63	4.90	1.65	5.22	1.67	5.57	1.69
							44	4.42	1.61	4.30	1.64	4.56	1.66	4.70	1.67	4.86	1.68	5.18	1.71	5.55	1.73
							46	4.42	1.65	4.24	1.68	4.52	1.70	4.67	1.71	4.82	1.72	5.16	1.75	5.53	1.77
2500	3500				6000	115%	10	4.42	1.05	6.23	1.08	6.35	1.11	6.42	1.12	6.50	1.13	6.68	1.16	6.90	1.18
							12	4.42	1.08	6.06	1.11	6.19	1.13	6.27	1.14	6.35	1.16	6.54	1.18	6.76	1.20
							14	4.42	1.11	5.90	1.13	6.04	1.16	6.12	1.17	6.20	1.18	6.40	1.21	6.63	1.23
							16	4.42	1.14	5.75	1.16	5.89	1.19	5.97	1.20	6.06	1.21	6.27	1.24	6.51	1.26
							18	4.42	1.16	5.60	1.19	5.75	1.22	5.84	1.23	5.93	1.24	6.15	1.26	6.40	1.29
							20	4.42	1.19	5.45	1.22	5.62	1.25	5.71	1.26	5.81	1.27	6.03	1.29	6.29	1.32
							21	4.42	1.21	5.39	1.24	5.55	1.26	5.65	1.27	5.75	1.28	5.98	1.31	6.24	1.33
							23	4.42	1.24	5.25	1.27	5.43	1.29	5.53	1.30	5.63	1.32	5.87	1.34	6.14	1.36
							25	4.42	1.27	5.13	1.30	5.31	1.32	5.42	1.33	5.53	1.35	5.77	1.37	6.05	1.39
							27	4.42	1.30	5.01	1.33	5.20	1.35	5.31	1.37	5.43	1.38	5.68	1.40	5.97	1.42
							29	4.42	1.34	4.90	1.36	5.10	1.39	5.21	1.40	5.33	1.41	5.60	1.43	5.89	1.46
							31	4.42	1.37	4.80	1.40	5.01	1.42	5.12	1.43	5.25	1.45	5.52	1.47	5.82	1.49
							33	4.42	1.41	4.70	1.43	4.92	1.46	5.04	1.47	5.17	1.48	5.45	1.50	5.76	1.52
							35	4.42	1.44	4.61	1.47	4.84	1.49	5.00	1.50	5.10	1.52	5.39	1.54	5.71	1.56
							37	4.42	1.48	4.53	1.50	4.76	1.53	4.89	1.54	5.03	1.55	5.33	1.57	5.66	1.60
							39	4.42	1.52	4.45	1.54	4.70	1.56	4.83	1.58	4.97	1.59	5.28	1.61	5.62	1.63
							42	4.42	1.57	4.35	1.60	4.61	1.62	4.75	1.63	4.90	1.65	5.22	1.67	5.57	1.69
							44	4.42	1.61	4.30	1.64	4.56	1.66	4.70	1.67	4.86	1.68	5.18	1.71	5.55	1.73
							46	4.42	1.65	4.24	1.68	4.52	1.70	4.67	1.71	4.82	1.72	5.16	1.75	5.53	1.77
2500	5000				7500	144%	10	4.42	1.02	6.23	1.04	6.35	1.07	6.42	1.08	6.50	1.09	6.68	1.12	6.90	1.14
							12	4.42	1.04	6.06	1.07	6.19	1.09	6.27	1.11	6.35	1.12	6.54	1.14	6.76	1.16
							14	4.42	1.07	5.90	1.10	6.04	1.12	6.12	1.13	6.20	1.14	6.40	1.17	6.63	1.19
							16	4.42	1.10	5.75	1.12	5.89	1.15	5.97	1.16	6.06	1.17	6.27	1.19	6.51	1.22
							18	4.42	1.13	5.60	1.15	5.75	1.18	5.84	1.19	5.93	1.20	6.15	1.22	6.40	1.24
							20	4.42	1.15	5.45	1.18	5.62	1.20	5.71	1.22	5.81	1.23	6.03	1.25	6.29	1.27
							21	4.42	1.17	5.39	1.19	5.55	1.22	5.65	1.23	5.75	1.24	5.98	1.26	6.24	1.29
							23	4.42	1.20	5.25	1.22	5.43	1.25	5.53	1.26	5.63	1.27	5.87	1.29	6.14	1.32
							25	4.42	1.23	5.13	1.25	5.31	1.28	5.42	1.29	5.53	1.30	5.77	1.32	6.05	1.35
							27	4.42	1.26	5.01	1.29	5.20	1.31	5.31	1.32	5.43	1.33	5.68	1.36	5.97	1.38
							29	4.42	1.29	4.90	1.32	5.10	1.34	5.21	1.35	5.33	1.36	5.60	1.39	5.89	1.41
							31	4.42	1.33	4.80	1.35	5.01	1.37	5.12	1.39	5.25	1.40	5.52	1.42	5.82	1.44
							33	4.42	1.36	4.70	1.38	4.92	1.41	5.04	1.42	5.17	1.43	5.45	1.45	5.76	1.47
							35	4.42	1.39	4.61	1.42	4.84	1.44	5.00	1.45	5.10	1.46	5.39	1.49	5.71	1.51
							37	4.42	1.43	4.53	1.45	4.76	1.48	4.89	1.49	5.03	1.50	5.33	1.52	5.66	1.54
							39	4.42	1.46	4.45	1.49	4.70	1.51	4.83	1.52	4.97	1.54	5.28	1.56	5.62	1.58
							42	4.42	1.52	4.35	1.54	4.61	1.57	4.75	1.58	4.90	1.59	5.22	1.61	5.57	1.63
							44	4.42	1.56	4.30	1.58	4.56	1.61	4.70	1.62	4.86	1.63	5.18	1.65	5.55	1.67
							46	4.42	1.60	4.24	1.62	4.52	1.64	4.67	1.66	4.82	1.67	5.16	1.69	5.53	1.71
3500	3500				7000	135%	10	4.42	1.05	6.23	1.08	6.35	1.11	6.42	1.12	6.50	1.13	6.68	1.16	6.90	1.18
							12	4.42	1.08	6.06	1.11	6.19	1.13	6.27	1.14	6.35	1.16	6.54	1.18	6.76	1.20
							14	4.42	1.11	5.90	1.13	6.04	1.16	6.12	1.17	6.20	1.18	6.40	1.21	6.63	1.23
							16	4.42	1.14	5.75	1.16	5.89	1.19	5.97	1.20	6.06	1.21	6.27	1.24	6.51	1.26
							18	4.42	1.16	5.60	1.19	5.75	1.22	5.84	1.23	5.93	1.24	6.15	1.26	6.40	1.29
							20	4.42	1.19	5.45	1.22	5.62	1.25	5.71	1.26	5.81	1.27	6.03	1.29	6.29	1.32
							21	4.42	1.21	5.39	1.24	5.55	1.26	5.65	1.27	5.75	1.28	5.98	1.31	6.24	1.33
							23	4.42	1.24	5.25	1.27	5.43	1.29	5.53	1.30	5.63	1.32	5.87	1.34	6.14	1.36
							25	4.42	1.27	5.13	1.30	5.31	1.32	5.42	1.33	5.53	1.35	5.77	1.37	6.05	1.39
							27	4.42	1.30	5.01	1.33	5.20	1.35	5.31	1.37	5.43	1.38	5.68	1.40	5.97	1.42
							29	4.42	1.34	4.90	1.36	5.10	1.39	5.21	1.40	5.33	1.41	5.60	1.43	5.89	1.46
							31	4.42	1.37	4.80	1.40	5.01	1.42	5.12	1.43	5.25	1.45	5.52	1.47	5.82	1.49
							33	4.42	1.41	4.70	1.43	4.92	1.46	5.04	1.47	5.17	1.48	5.45	1.50	5.76	1.52
							35	4.42	1.44	4.61	1.47	4.84	1.49	5.00	1.50	5.10	1.52	5.39	1.54	5.71	1.56
							37	4.42	1.48	4.53	1.50	4.76	1.53	4.89	1.54	5.03	1.55	5.33	1.57	5.66	1.60
							39	4.42	1.52	4.45	1.54	4.70	1.56	4.83	1.58	4.97	1.59	5.28	1.61	5.62	1.63
							42	4.42	1.57	4.35	1.60	4.61	1.62	4.75	1.63	4.90	1.65	5.22	1.67	5.57	1.69
							44	4.42	1.61	4.30	1.64	4.56	1.66	4.70	1.67	4.86	1.68	5.18	1.71	5.55	1.73
							46	4.42	1.65	4.24	1.68	4.52	1.70	4.67	1.71	4.82	1.72	5.16	1.75	5.53	1.77

* All figures comply with EN14511

1. Cooling capacity is based on 27°CDB / 19°CWB (indoor temperature), 35°CDB (outdoor temperature).
2. Heating capacity is based on 20°CDB (indoor temperature), 7°CDB/6°CWB (outdoor temperature).
3. Capacities are based on the following conditions : - Corresponding refrigerant piping length : 5m / - Level difference : 0m
4. The total ability of connected a indoor unit is up to 8.5kW
5. It is impossible to connect the indoor unit for one room only.
6. This data is reference data for temperature capacity trend.

2 AJ050FCJ2EH

1) Cooling

	Combination (Capacity Index)					Combination (Total)	Combination (%)	Outdoor Temperature (°C, DB)	Indoor Temperature(°C, WB)													
									14		16		18		19		20		22		24	
									TC(kW)	PI(kW)	TC(kW)	PI(kW)	TC(kW)	PI(kW)	TC(kW)	PI(kW)	TC(kW)	PI(kW)	TC(kW)	PI(kW)	TC(kW)	PI(kW)
COOLING	3500	5000				8500	144%	10	4.42	0.93	6.23	0.95	6.35	0.97	6.42	0.98	6.50	1.00	6.68	1.02	6.90	1.04
								12	4.42	0.95	6.06	0.97	6.19	1.00	6.27	1.01	6.35	1.02	6.54	1.04	6.76	1.06
								14	4.42	0.97	5.90	1.00	6.04	1.02	6.12	1.03	6.20	1.04	6.40	1.06	6.63	1.08
								16	4.42	1.00	5.75	1.02	5.89	1.04	5.97	1.06	6.06	1.07	6.27	1.09	6.51	1.11
								18	4.42	1.02	5.60	1.05	5.75	1.07	5.84	1.08	5.93	1.09	6.15	1.11	6.40	1.13
								20	4.42	1.05	5.45	1.07	5.62	1.10	5.71	1.11	5.81	1.12	6.03	1.14	6.29	1.16
								21	4.42	1.06	5.39	1.09	5.55	1.11	5.65	1.12	5.75	1.13	5.98	1.15	6.24	1.17
								23	4.42	1.09	5.25	1.11	5.43	1.14	5.53	1.15	5.63	1.16	5.87	1.18	6.14	1.20
								25	4.42	1.12	5.13	1.14	5.31	1.16	5.42	1.17	5.53	1.19	5.77	1.21	6.05	1.23
								27	4.42	1.15	5.01	1.17	5.20	1.19	5.31	1.20	5.43	1.21	5.68	1.23	5.97	1.25
								29	4.42	1.18	4.90	1.20	5.10	1.22	5.21	1.23	5.33	1.24	5.60	1.26	5.89	1.28
								31	4.42	1.21	4.80	1.23	5.01	1.25	5.12	1.26	5.25	1.27	5.52	1.29	5.82	1.31
								33	4.42	1.24	4.70	1.26	4.92	1.28	5.04	1.29	5.17	1.30	5.45	1.32	5.76	1.34
								35	4.42	1.27	4.61	1.29	4.84	1.31	5.00	1.32	5.10	1.33	5.39	1.35	5.71	1.37
								37	4.42	1.30	4.53	1.32	4.76	1.34	4.89	1.36	5.03	1.37	5.33	1.39	5.66	1.40
								39	4.42	1.33	4.45	1.36	4.70	1.38	4.83	1.39	4.97	1.40	5.28	1.42	5.62	1.44
								42	4.42	1.38	4.35	1.41	4.61	1.43	4.75	1.44	4.90	1.45	5.22	1.47	5.57	1.49
								44	4.42	1.42	4.30	1.44	4.56	1.46	4.70	1.47	4.86	1.48	5.18	1.50	5.55	1.52
								46	4.42	1.45	4.24	1.48	4.52	1.50	4.67	1.51	4.82	1.52	5.16	1.54	5.53	1.56

* All figures comply with EN14511

1. Cooling capacity is based on 27°CDB / 19°CWB (indoor temperature), 35°CDB (outdoor temperature).
2. Heating capacity is based on 20°CDB (indoor temperature), 7°CDB/6°CWB (outdoor temperature).
3. Capacities are based on the following conditions : - Corresponding refrigerant piping length : 5m / - Level difference : 0m
4. The total ability of connected a indoor unit is up to 8.5kW
5. It is impossible to connect the indoor unit for one room only.
6. This data is reference data for temperature capacity trend.

2) Heating

	Combination (Capacity Index)					Combination (Total)	Combination (%)	Outdoor Temperature (°C, DB)	Indoor Temperature(°C, WB)													
									14		16		18		20		21		22		24	
									TC(kW)	PI(kW)	TC(kW)	PI(kW)	TC(kW)	PI(kW)	TC(kW)	PI(kW)	TC(kW)	PI(kW)	TC(kW)	PI(kW)	TC(kW)	PI(kW)
HEATING	2000					2000	38%	-15	1.43	0.70	1.39	0.71	1.35	0.72	1.33	0.72	1.31	0.73	1.28	0.73	1.26	0.74
								-10	1.71	0.74	1.67	0.75	1.62	0.76	1.60	0.76	1.59	0.77	1.55	0.77	1.53	0.78
								-5	2.00	0.77	1.95	0.78	1.90	0.79	1.88	0.80	1.86	0.80	1.83	0.81	1.80	0.82
								0	2.28	0.81	2.23	0.82	2.18	0.83	2.16	0.84	2.14	0.84	2.10	0.85	2.07	0.86
								2	2.40	0.82	2.34	0.84	2.29	0.85	2.27	0.85	2.25	0.86	2.21	0.87	2.18	0.87
								7	2.62	0.85	2.57	0.86	2.52	0.88	2.50	0.88	2.47	0.89	2.43	0.90	2.39	0.90
								10	2.85	0.88	2.79	0.89	2.74	0.91	2.72	0.91	2.69	0.92	2.65	0.93	2.61	0.93
								15	3.14	0.92	3.08	0.93	3.02	0.94	3.00	0.95	2.97	0.95	2.93	0.96	2.88	0.97
	2500					2500	48%	-15	1.89	0.83	1.83	0.85	1.78	0.86	1.75	0.86	1.73	0.87	1.69	0.88	1.66	0.88
								-10	2.26	0.88	2.20	0.89	2.14	0.90	2.12	0.91	2.09	0.91	2.05	0.92	2.02	0.93
								-5	2.64	0.92	2.57	0.94	2.51	0.95	2.48	0.95	2.46	0.96	2.41	0.97	2.37	0.98
								0	3.01	0.96	2.94	0.98	2.88	0.99	2.85	1.00	2.82	1.00	2.77	1.01	2.73	1.02
								2	3.16	0.98	3.09	1.00	3.03	1.01	3.00	1.02	2.97	1.02	2.92	1.03	2.87	1.04
								7	3.46	1.02	3.39	1.03	3.32	1.05	3.30	1.05	3.26	1.06	3.21	1.07	3.16	1.08
								10	3.76	1.05	3.69	1.07	3.62	1.08	3.59	1.09	3.55	1.09	3.50	1.10	3.45	1.12
								15	4.14	1.09	4.06	1.11	3.99	1.12	3.95	1.13	3.92	1.14	3.86	1.15	3.81	1.16
	3500					3500	67%	-15	2.29	1.03	2.22	1.05	2.15	1.06	2.13	1.07	2.10	1.07	2.05	1.08	2.01	1.09
								-10	2.74	1.09	2.67	1.10	2.60	1.12	2.57	1.12	2.54	1.13	2.49	1.14	2.44	1.15
								-5	3.20	1.14	3.12	1.16	3.04	1.17	3.01	1.18	2.98	1.19	2.92	1.20	2.88	1.21
								0	3.65	1.19	3.57	1.21	3.49	1.23	3.46	1.24	3.42	1.24	3.36	1.26	3.31	1.27
								2	3.83	1.22	3.75	1.23	3.67	1.25	3.63	1.26	3.60	1.27	3.54	1.28	3.48	1.29
								7	4.20	1.26	4.11	1.28	4.03	1.29	4.00	1.30	3.95	1.31	3.89	1.32	3.83	1.34
								10	4.56	1.30	4.47	1.32	4.38	1.34	4.35	1.35	4.31	1.35	4.24	1.37	4.18	1.38
								15	5.02	1.35	4.92	1.37	4.83	1.39	4.79	1.40	4.75	1.41	4.68	1.42	4.62	1.44
	5000					5000	96%	-15	3.09	1.31	2.99	1.33	2.91	1.35	2.87	1.36	2.83	1.36	2.77	1.38	2.72	1.39
								-10	3.70	1.38	3.60	1.40	3.51	1.42	3.47	1.43	3.43	1.44	3.36	1.45	3.30	1.46
								-5	4.32	1.45	4.21	1.47	4.11	1.49	4.07	1.50	4.02	1.51	3.95	1.52	3.88	1.54
								0	4.93	1.52	4.82	1.54	4.71	1.56	4.66	1.57	4.62	1.58	4.54	1.59	4.47	1.61
								2	5.17	1.54	5.06	1.57	4.95	1.59	4.90	1.60	4.86	1.61	4.78	1.62	4.70	1.64
								7	5.67	1.60	5.55	1.62	5.44	1.64	5.40	1.65	5.34	1.66	5.25	1.68	5.17	1.70
								10	6.16	1.65	6.03	1.67	5.92	1.70	5.87	1.71	5.82	1.72	5.72	1.74	5.64	1.75
								15	6.78	1.72	6.65	1.74	6.53	1.77	6.47	1.78	6.42	1.79	6.32	1.81	6.23	1.82

* All figures comply with EN14511

1. Cooling capacity is based on 27°CDB / 19°CWB (indoor temperature), 35°CDB (outdoor temperature).
2. Heating capacity is based on 20°CDB (indoor temperature), 7°CDB/6°CWB (outdoor temperature).
3. Capacities are based on the following conditions : - Corresponding refrigerant piping length : 5m / - Level difference : 0m
4. The total ability of connected a indoor unit is up to 8.5kW
5. It is impossible to connect the indoor unit for one room only.
6. This data is reference data for temperature capacity trend.

2) Heating

HEATING

Combination (Capacity Index)					Combination (Total)	Combination (%)	Outdoor Temperature (°C, DB)	Indoor Temperature(°C, WB)													
								14		16		18		20		21		22		24	
								TC(kW)	PI(kW)	TC(kW)	PI(kW)	TC(kW)	PI(kW)	TC(kW)	PI(kW)	TC(kW)	PI(kW)	TC(kW)	PI(kW)	TC(kW)	PI(kW)
2000	2000				4000	77%	-15	2.52	0.97	2.44	0.98	2.37	1.00	2.34	1.00	2.31	1.01	2.26	1.02	2.21	1.03
							-10	3.02	1.02	2.93	1.04	2.86	1.05	2.82	1.06	2.79	1.06	2.74	1.07	2.69	1.08
							-5	3.52	1.07	3.43	1.09	3.35	1.10	3.31	1.11	3.28	1.11	3.22	1.13	3.16	1.14
							0	4.02	1.12	3.92	1.14	3.84	1.15	3.80	1.16	3.76	1.17	3.70	1.18	3.64	1.19
							2	4.22	1.14	4.12	1.16	4.04	1.17	4.00	1.18	3.96	1.19	3.89	1.20	3.83	1.21
							7	4.62	1.18	4.52	1.20	4.43	1.21	4.40	1.22	4.35	1.23	4.28	1.24	4.21	1.25
							10	5.02	1.22	4.92	1.24	4.82	1.25	4.78	1.26	4.74	1.27	4.66	1.28	4.60	1.30
							15	5.52	1.27	5.41	1.29	5.32	1.31	5.27	1.31	5.23	1.32	5.15	1.34	5.08	1.35
2000	2500				4500	87%	-15	2.92	1.12	2.83	1.14	2.75	1.15	2.71	1.16	2.68	1.17	2.62	1.18	2.56	1.19
							-10	3.50	1.18	3.40	1.20	3.31	1.21	3.27	1.22	3.24	1.23	3.17	1.24	3.12	1.25
							-5	4.08	1.24	3.97	1.26	3.88	1.27	3.84	1.28	3.80	1.29	3.73	1.30	3.67	1.31
							0	4.66	1.30	4.55	1.31	4.45	1.33	4.41	1.34	4.36	1.35	4.29	1.36	4.22	1.37
							2	4.89	1.32	4.78	1.34	4.68	1.36	4.63	1.36	4.59	1.37	4.51	1.39	4.44	1.40
							7	5.35	1.36	5.24	1.38	5.13	1.40	5.10	1.41	5.04	1.42	4.96	1.44	4.89	1.45
							10	5.82	1.41	5.70	1.43	5.59	1.45	5.54	1.46	5.49	1.47	5.41	1.48	5.33	1.50
							15	6.40	1.47	6.28	1.49	6.16	1.51	6.11	1.52	6.06	1.53	5.97	1.54	5.88	1.56
2000	3500				5500	106%	-15	3.26	1.21	3.16	1.23	3.07	1.24	3.03	1.25	2.99	1.26	2.92	1.27	2.87	1.28
							-10	3.91	1.27	3.80	1.29	3.70	1.31	3.66	1.32	3.62	1.32	3.54	1.34	3.48	1.35
							-5	4.56	1.33	4.44	1.35	4.34	1.37	4.29	1.38	4.25	1.39	4.17	1.40	4.10	1.41
							0	5.20	1.40	5.08	1.42	4.97	1.44	4.92	1.45	4.88	1.45	4.79	1.47	4.72	1.48
							2	5.46	1.42	5.34	1.44	5.23	1.46	5.18	1.47	5.13	1.48	5.04	1.49	4.96	1.51
							7	5.98	1.47	5.85	1.49	5.74	1.51	5.70	1.52	5.63	1.53	5.54	1.55	5.46	1.56
							10	6.50	1.52	6.37	1.54	6.25	1.56	6.19	1.57	6.14	1.58	6.04	1.60	5.96	1.61
							15	7.15	1.58	7.01	1.60	6.89	1.63	6.83	1.64	6.77	1.65	6.67	1.66	6.58	1.68
2000	5000				7000	135%	-15	3.26	1.14	3.16	1.16	3.07	1.18	3.03	1.18	2.99	1.19	2.92	1.20	2.87	1.21
							-10	3.91	1.20	3.80	1.22	3.70	1.24	3.66	1.25	3.62	1.25	3.54	1.27	3.48	1.28
							-5	4.56	1.26	4.44	1.28	4.34	1.30	4.29	1.31	4.25	1.32	4.17	1.33	4.10	1.34
							0	5.20	1.32	5.08	1.34	4.97	1.36	4.92	1.37	4.88	1.38	4.79	1.39	4.72	1.40
							2	5.46	1.35	5.34	1.37	5.23	1.39	5.18	1.39	5.13	1.40	5.04	1.42	4.96	1.43
							7	5.98	1.39	5.85	1.41	5.74	1.43	5.70	1.44	5.63	1.45	5.54	1.47	5.46	1.48
							10	6.50	1.44	6.37	1.46	6.25	1.48	6.19	1.49	6.14	1.50	6.04	1.52	5.96	1.53
							15	7.15	1.50	7.01	1.52	6.89	1.54	6.83	1.55	6.77	1.56	6.67	1.58	6.58	1.59
2500	2500				5000	96%	-15	3.26	1.23	3.16	1.25	3.07	1.27	3.03	1.27	2.99	1.28	2.92	1.29	2.87	1.30
							-10	3.91	1.30	3.80	1.32	3.70	1.33	3.66	1.34	3.62	1.35	3.54	1.36	3.48	1.37
							-5	4.56	1.36	4.44	1.38	4.34	1.40	4.29	1.41	4.25	1.42	4.17	1.43	4.10	1.44
							0	5.20	1.42	5.08	1.45	4.97	1.46	4.92	1.47	4.88	1.48	4.79	1.50	4.72	1.51
							2	5.46	1.45	5.34	1.47	5.23	1.49	5.18	1.50	5.13	1.51	5.04	1.52	4.96	1.54
							7	5.98	1.50	5.85	1.52	5.74	1.54	5.70	1.55	5.63	1.56	5.54	1.58	5.46	1.59
							10	6.50	1.55	6.37	1.57	6.25	1.59	6.19	1.60	6.14	1.61	6.04	1.63	5.96	1.65
							15	7.15	1.61	7.01	1.64	6.89	1.66	6.83	1.67	6.77	1.68	6.67	1.70	6.58	1.71
2500	3500				6000	115%	-15	3.26	1.23	3.16	1.25	3.07	1.27	3.03	1.27	2.99	1.28	2.92	1.29	2.87	1.30
							-10	3.91	1.30	3.80	1.32	3.70	1.33	3.66	1.34	3.62	1.35	3.54	1.36	3.48	1.37
							-5	4.56	1.36	4.44	1.38	4.34	1.40	4.29	1.41	4.25	1.42	4.17	1.43	4.10	1.44
							0	5.20	1.42	5.08	1.45	4.97	1.46	4.92	1.47	4.88	1.48	4.79	1.50	4.72	1.51
							2	5.46	1.45	5.34	1.47	5.23	1.49	5.18	1.50	5.13	1.51	5.04	1.52	4.96	1.54
							7	5.98	1.50	5.85	1.52	5.74	1.54	5.70	1.55	5.63	1.56	5.54	1.58	5.46	1.59
							10	6.50	1.55	6.37	1.57	6.25	1.59	6.19	1.60	6.14	1.61	6.04	1.63	5.96	1.65
							15	7.15	1.61	7.01	1.64	6.89	1.66	6.83	1.67	6.77	1.68	6.67	1.70	6.58	1.71
2500	5000				7500	144%	-15	3.26	1.14	3.16	1.16	3.07	1.18	3.03	1.18	2.99	1.19	2.92	1.20	2.87	1.21
							-10	3.91	1.20	3.80	1.22	3.70	1.24	3.66	1.25	3.62	1.25	3.54	1.27	3.48	1.28
							-5	4.56	1.26	4.44	1.28	4.34	1.30	4.29	1.31	4.25	1.32	4.17	1.33	4.10	1.34
							0	5.20	1.32	5.08	1.34	4.97	1.36	4.92	1.37	4.88	1.38	4.79	1.39	4.72	1.40
							2	5.46	1.35	5.34	1.37	5.23	1.39	5.18	1.39	5.13	1.40	5.04	1.42	4.96	1.43
							7	5.98	1.39	5.85	1.41	5.74	1.43	5.70	1.44	5.63	1.45	5.54	1.47	5.46	1.48
							10	6.50	1.44	6.37	1.46	6.25	1.48	6.19	1.49	6.14	1.50	6.04	1.52	5.96	1.53
							15	7.15	1.50	7.01	1.52	6.89	1.54	6.83	1.55	6.77	1.56	6.67	1.58	6.58	1.59
3500	3500				7000	135%	-15	3.26	1.17	3.16	1.19	3.07	1.20	3.03	1.21	2.99	1.22	2.92	1.23	2.87	1.24
							-10	3.91	1.23	3.80	1.25	3.70	1.26	3.66	1.27	3.62	1.28	3.54	1.29	3.48	1.30
							-5	4.56	1.29	4.44	1.31	4.34	1.33	4.29	1.34	4.25	1.34	4.17	1.36	4.10	1.37
							0	5.20	1.35	5.08	1.37	4.97	1.39	4.92	1.40	4.88	1.41	4.79	1.42	4.72	1.43
							2	5.46	1.37	5.34	1.40	5.23	1.41	5.18	1.42	5.13	1.43	5.04	1.45	4.96	1.46
							7	5.98	1.42	5.85	1.44	5.74	1.46	5.70	1.47	5.63	1.48	5.54	1.50	5.46	1.51
							10	6.50	1.47	6.37	1.49	6.25	1.51	6.19	1.52	6.14	1.53	6.04	1.55	5.96	1.56
							15	7.15	1.53	7.01	1.55	6.89	1.57	6.83	1.58	6.77	1.59	6.67	1.61	6.58	1.63
3500	5000				8500	144%	-15	3.26	1.07	3.16	1.09	3.07	1.10	3.03	1.11	2.99	1.12	2.92	1.13	2.87	1.14
							-10	3.91	1.13	3.80	1.15	3.70	1.16	3.66	1.17	3.62	1.17	3.54	1.19	3.48	1.20
							-5	4.56	1.19	4.44	1.20	4.34	1.22	4.29	1.23	4.25	1.23	4.17	1.25	4.10	1.26
							0	5.20	1.24	5.08	1.26	4.97	1.28	4.92	1.28	4.88	1.29	4.79	1.30	4.72	1.32
							2	5.46	1.26	5.34	1.28	5.23	1.30	5.18	1.31	5.13	1.31	5.04	1.33	4.96	1.34
							7	5.98	1.31	5.85	1.33	5.74	1.34	5.70	1.35	5.63	1.36	5.54	1.37	5.46	1.39
							10	6.50	1.35	6.37	1.37	6.25	1.39	6.19	1.40	6.14	1.41	6.04	1.42	5.96	1.43
							15	7.15	1.40	7.01	1.43	6.89	1.44	6.83	1.45	6.77	1.46	6.67	1.48	6.58	1.49

* All figures comply with EN14511

1. Cooling capacity is based on 27°CDB / 19°CWB (indoor temperature), 35°CDB (outdoor temperature).
2. Heating capacity is based on 20°CDB (indoor temperature), 7°CDB/6°CWB (outdoor temperature).
3. Capacities are based on the following conditions : - Corresponding refrigerant piping length : 5m / - Level difference : 0m
4. The total ability of connected a indoor unit is up to 8.5kW
5. It is impossible to connect the indoor unit for one room only.
6. This data is reference data for temperature capacity trend.

3 AJ052FCJ3EH

1) Cooling

COOLING

Combination (Capacity Index)	Combination (Total)	Combination (%)	Outdoor Temperature (°C, DB)	Indoor Temperature(°C, WB)													
				14		16		18		19		20		22		24	
				TC(kW)	PI(kW)	TC(kW)	PI(kW)	TC(kW)	PI(kW)	TC(kW)	PI(kW)	TC(kW)	PI(kW)	TC(kW)	PI(kW)	TC(kW)	PI(kW)
2000	2000	38%	10	1.60	0.36	2.32	0.41	2.42	0.44	2.46	0.46	2.51	0.47	2.61	0.49	2.71	0.51
			12	1.60	0.38	2.28	0.42	2.38	0.45	2.43	0.47	2.48	0.48	2.57	0.50	2.67	0.52
			14	1.60	0.40	2.24	0.44	2.34	0.47	2.39	0.48	2.44	0.50	2.53	0.52	2.63	0.53
			16	1.60	0.41	2.21	0.45	2.30	0.48	2.35	0.50	2.40	0.51	2.50	0.53	2.59	0.54
			18	1.60	0.43	2.17	0.47	2.27	0.50	2.31	0.51	2.36	0.52	2.46	0.54	2.55	0.55
			20	1.60	0.45	2.13	0.48	2.23	0.51	2.28	0.52	2.32	0.53	2.42	0.55	2.52	0.56
			21	1.60	0.46	2.12	0.49	2.21	0.52	2.26	0.53	2.30	0.54	2.40	0.56	2.50	0.57
			23	1.60	0.48	2.08	0.51	2.17	0.53	2.22	0.55	2.27	0.56	2.36	0.57	2.46	0.58
			25	1.60	0.49	2.04	0.53	2.14	0.55	2.18	0.56	2.23	0.57	2.32	0.58	2.42	0.59
			27	1.60	0.51	2.01	0.54	2.10	0.57	2.15	0.58	2.19	0.58	2.29	0.60	2.38	0.60
			29	1.60	0.53	1.97	0.56	2.06	0.58	2.11	0.59	2.16	0.60	2.25	0.61	2.34	0.61
			31	1.60	0.55	1.94	0.58	2.03	0.60	2.07	0.61	2.12	0.61	2.21	0.62	2.30	0.62
			33	1.60	0.57	1.90	0.60	1.99	0.61	2.04	0.62	2.08	0.63	2.17	0.64	2.27	0.64
			35	1.60	0.59	1.86	0.61	1.95	0.63	2.00	0.63	2.04	0.64	2.14	0.65	2.23	0.65
			37	1.60	0.61	1.83	0.63	1.92	0.65	1.96	0.65	2.01	0.66	2.10	0.66	2.19	0.66
			39	1.60	0.63	1.79	0.65	1.88	0.67	1.93	0.67	1.97	0.68	2.06	0.68	2.15	0.68
			42	1.58	0.66	1.74	0.68	1.83	0.69	1.87	0.70	1.92	0.70	2.01	0.70	2.10	0.70
			44	1.50	0.68	1.71	0.70	1.79	0.71	1.84	0.71	1.88	0.72	1.97	0.72	2.06	0.71
			46	1.46	0.70	1.67	0.72	1.76	0.73	1.80	0.73	1.84	0.73	1.93	0.73	2.02	0.72
2500	2500	48%	10	2.00	0.46	2.90	0.51	3.02	0.55	3.08	0.57	3.14	0.59	3.26	0.62	3.39	0.64
			12	2.00	0.48	2.85	0.53	2.97	0.57	3.03	0.59	3.09	0.60	3.22	0.63	3.34	0.65
			14	2.00	0.50	2.80	0.55	2.93	0.59	2.99	0.61	3.05	0.62	3.17	0.65	3.29	0.66
			16	2.00	0.52	2.76	0.57	2.88	0.61	2.94	0.62	3.00	0.64	3.12	0.66	3.24	0.68
			18	2.00	0.54	2.71	0.59	2.83	0.62	2.89	0.64	2.95	0.65	3.07	0.68	3.19	0.69
			20	2.00	0.56	2.67	0.61	2.79	0.64	2.85	0.66	2.90	0.67	3.02	0.69	3.14	0.70
			21	2.00	0.58	2.64	0.62	2.76	0.65	2.82	0.67	2.88	0.68	3.00	0.70	3.12	0.71
			23	2.00	0.60	2.60	0.64	2.72	0.67	2.78	0.68	2.83	0.70	2.95	0.71	3.07	0.72
			25	2.00	0.62	2.55	0.66	2.67	0.69	2.73	0.70	2.79	0.71	2.91	0.73	3.02	0.74
			27	2.00	0.64	2.51	0.68	2.62	0.71	2.68	0.72	2.74	0.73	2.86	0.75	2.98	0.75
			29	2.00	0.67	2.46	0.70	2.58	0.73	2.64	0.74	2.69	0.75	2.81	0.76	2.93	0.77
			31	2.00	0.69	2.42	0.72	2.53	0.75	2.59	0.76	2.65	0.77	2.76	0.78	2.88	0.78
			33	2.00	0.71	2.37	0.75	2.49	0.77	2.54	0.78	2.60	0.79	2.72	0.80	2.83	0.80
			35	2.00	0.74	2.33	0.77	2.44	0.79	2.50	0.79	2.56	0.81	2.67	0.81	2.78	0.82
			37	2.00	0.76	2.29	0.79	2.40	0.81	2.45	0.82	2.51	0.83	2.62	0.83	2.74	0.83
			39	2.00	0.79	2.24	0.82	2.35	0.84	2.41	0.84	2.46	0.85	2.58	0.85	2.69	0.85
			42	1.98	0.83	2.18	0.85	2.29	0.87	2.34	0.87	2.40	0.88	2.51	0.88	2.62	0.87
			44	1.88	0.85	2.13	0.88	2.24	0.89	2.30	0.90	2.35	0.90	2.46	0.90	2.57	0.89
			46	1.83	0.88	2.09	0.90	2.20	0.91	2.25	0.92	2.30	0.92	2.41	0.92	2.53	0.91
3500	3500	67%	10	2.80	0.67	4.06	0.74	4.23	0.80	4.31	0.83	4.40	0.86	4.57	0.90	4.74	0.93
			12	2.80	0.70	3.99	0.77	4.16	0.83	4.25	0.86	4.33	0.88	4.50	0.92	4.68	0.95
			14	2.80	0.73	3.93	0.80	4.10	0.86	4.18	0.88	4.26	0.90	4.44	0.94	4.61	0.97
			16	2.80	0.76	3.86	0.82	4.03	0.88	4.11	0.91	4.20	0.93	4.37	0.96	4.54	0.99
			18	2.80	0.79	3.80	0.85	3.96	0.91	4.05	0.93	4.13	0.95	4.30	0.98	4.47	1.00
			20	2.80	0.82	3.73	0.88	3.90	0.94	3.98	0.96	4.07	0.98	4.23	1.01	4.40	1.02
			21	2.80	0.84	3.70	0.90	3.87	0.95	3.95	0.97	4.03	0.99	4.20	1.02	4.37	1.03
			23	2.80	0.87	3.64	0.93	3.80	0.98	3.89	1.00	3.97	1.01	4.13	1.04	4.30	1.05
			25	2.80	0.90	3.58	0.96	3.74	1.00	3.82	1.02	3.90	1.04	4.07	1.06	4.23	1.08
			27	2.80	0.94	3.51	0.99	3.67	1.03	3.76	1.05	3.84	1.07	4.00	1.09	4.17	1.10
			29	2.80	0.97	3.45	1.02	3.61	1.06	3.69	1.08	3.77	1.09	3.93	1.11	4.10	1.12
			31	2.80	1.01	3.39	1.05	3.55	1.09	3.63	1.11	3.71	1.12	3.87	1.14	4.03	1.14
			33	2.80	1.04	3.32	1.09	3.48	1.12	3.56	1.14	3.64	1.15	3.80	1.16	3.97	1.16
			35	2.80	1.08	3.26	1.12	3.42	1.15	3.50	1.15	3.58	1.18	3.74	1.19	3.90	1.19
			37	2.80	1.11	3.20	1.15	3.36	1.18	3.43	1.20	3.51	1.20	3.67	1.21	3.83	1.21
			39	2.80	1.15	3.14	1.19	3.29	1.22	3.37	1.23	3.45	1.23	3.61	1.24	3.77	1.23
			42	2.77	1.20	3.05	1.24	3.20	1.26	3.28	1.27	3.35	1.28	3.51	1.28	3.67	1.27
			44	2.63	1.24	2.98	1.27	3.14	1.30	3.21	1.30	3.29	1.31	3.45	1.31	3.60	1.30
			46	2.56	1.28	2.92	1.31	3.07	1.33	3.15	1.34	3.23	1.34	3.38	1.34	3.54	1.32
5000	5000	96%	10	4.00	0.94	5.79	1.04	6.04	1.13	6.16	1.17	6.28	1.21	6.53	1.27	6.78	1.31
			12	4.00	0.98	5.70	1.08	5.94	1.17	6.07	1.21	6.19	1.24	6.43	1.30	6.68	1.34
			14	4.00	1.02	5.61	1.12	5.85	1.21	5.97	1.24	6.09	1.27	6.34	1.33	6.58	1.36
			16	4.00	1.07	5.52	1.16	5.76	1.24	5.88	1.28	6.00	1.31	6.24	1.36	6.48	1.39
			18	4.00	1.11	5.43	1.20	5.66	1.28	5.78	1.31	5.90	1.34	6.14	1.39	6.39	1.42
			20	4.00	1.16	5.34	1.24	5.57	1.32	5.69	1.35	5.81	1.37	6.05	1.42	6.29	1.44
			21	4.00	1.18	5.29	1.27	5.53	1.34	5.64	1.37	5.76	1.39	6.00	1.43	6.24	1.46
			23	4.00	1.23	5.20	1.31	5.43	1.38	5.55	1.40	5.67	1.43	5.91	1.46	6.14	1.49
			25	4.00	1.27	5.11	1.35	5.34	1.42	5.46	1.44	5.57	1.46	5.81	1.50	6.05	1.52
			27	4.00	1.32	5.02	1.40	5.25	1.46	5.37	1.48	5.48	1.50	5.72	1.53	5.95	1.55
			29	4.00	1.37	4.93	1.44	5.16	1.50	5.27	1.52	5.39	1.54	5.62	1.56	5.86	1.58
			31	4.00	1.42	4.84	1.49	5.07	1.54	5.18	1.56	5.30	1.58	5.53	1.60	5.76	1.61
			33	4.00	1.47	4.75	1.53	4.98	1.58	5.09	1.60	5.20	1.62	5.43	1.64	5.66	1.64
			35	4.00	1.52	4.66	1.58	4.89	1.62	5.00	1.62	5.11	1.66	5.34	1.67	5.57	1.67
			37	4.00	1.57	4.57	1.63	4.79	1.67	4.91	1.68	5.02	1.70	5.25	1.71	5.47	1.70
			39	4.00	1.62	4.48	1.67	4.70	1.71	4.82	1.73	4.93	1.74	5.15	1.75	5.38	1.74
			42	3.95	1.70	4.35	1.75	4.57	1.78	4.68	1.79	4.79	1.80	5.01	1.80	5.24	1.79
			44	3.75	1.75	4.26	1.80	4.48	1.83	4.59	1.84	4.70	1.84	4.92	1.84	5.14	1.83
			46	3.65	1.80	4.18	1.85	4.39	1.87	4.50	1.88	4.61	1.89	4.83	1.88	5.05	1.86

* All figures comply with EN14511

1. Cooling capacity is based on 27°CDB / 19°CWB (indoor temperature), 35°CDB (outdoor temperature).
2. Heating capacity is based on 20°CDB (indoor temperature), 7°CDB/6°CWB (outdoor temperature).
3. Capacities are based on the following conditions : - Corresponding refrigerant piping length : 5m / - Level difference : 0m
4. The total ability of connected a indoor unit is up to 8.0kW
5. It is impossible to connect the indoor unit for one room only.
6. This data is reference data for temperature capacity trend.

1) Cooling

COOLING

Combination (Capacity Index)					Combination (Total)	Combination (%)	Outdoor Temperature (°C, DB)	Indoor Temperature(°C, WB)													
								14		16		18		19		20		22		24	
								TC(kW)	PI(kW)	TC(kW)	PI(kW)	TC(kW)	PI(kW)	TC(kW)	PI(kW)	TC(kW)	PI(kW)	TC(kW)	PI(kW)	TC(kW)	PI(kW)
2000	2000				4000	77%	10	3.53	0.87	4.99	0.89	5.08	0.91	5.14	0.92	5.20	0.94	5.35	0.95	5.52	0.97
							12	3.53	0.89	4.85	0.91	4.95	0.94	5.01	0.95	5.08	0.96	5.23	0.98	5.41	1.00
							14	3.53	0.92	4.72	0.94	4.83	0.96	4.89	0.97	4.96	0.98	5.12	1.00	5.31	1.02
							16	3.53	0.94	4.60	0.96	4.71	0.98	4.78	0.99	4.85	1.00	5.02	1.02	5.21	1.04
							18	3.53	0.96	4.48	0.98	4.60	1.01	4.67	1.02	4.75	1.03	4.92	1.04	5.12	1.06
							20	3.53	0.99	4.36	1.01	4.49	1.03	4.57	1.04	4.65	1.05	4.83	1.07	5.03	1.09
							21	3.53	1.00	4.31	1.02	4.44	1.04	4.52	1.05	4.60	1.06	4.78	1.08	4.99	1.10
							23	3.53	1.03	4.20	1.05	4.34	1.07	4.42	1.08	4.51	1.09	4.70	1.11	4.91	1.13
							25	3.53	1.05	4.10	1.07	4.25	1.09	4.33	1.10	4.42	1.11	4.62	1.13	4.84	1.15
							27	3.53	1.08	4.01	1.10	4.16	1.12	4.25	1.13	4.34	1.14	4.55	1.16	4.78	1.18
							29	3.53	1.11	3.92	1.13	4.08	1.15	4.17	1.16	4.27	1.17	4.48	1.19	4.72	1.20
							31	3.53	1.13	3.84	1.15	4.01	1.18	4.10	1.19	4.20	1.19	4.42	1.21	4.66	1.23
							33	3.53	1.16	3.76	1.18	3.94	1.20	4.03	1.21	4.13	1.22	4.36	1.24	4.61	1.26
							35	3.53	1.19	3.69	1.21	3.87	1.23	4.00	1.24	4.08	1.25	4.31	1.27	4.57	1.29
							37	3.53	1.22	3.62	1.24	3.81	1.26	3.91	1.27	4.02	1.28	4.26	1.30	4.53	1.32
							39	3.53	1.25	3.56	1.27	3.76	1.29	3.86	1.30	3.98	1.31	4.22	1.33	4.49	1.35
							42	3.53	1.30	3.48	1.32	3.69	1.34	3.80	1.35	3.92	1.36	4.17	1.38	4.46	1.40
							44	3.53	1.33	3.44	1.35	3.65	1.37	3.76	1.38	3.89	1.39	4.15	1.41	4.44	1.43
							46	3.53	1.37	3.39	1.39	3.61	1.41	3.73	1.42	3.86	1.43	4.13	1.44	4.42	1.46
2000	2500				4500	87%	10	4.07	0.99	5.73	1.02	5.84	1.04	5.91	1.05	5.98	1.06	6.15	1.09	6.34	1.11
							12	4.07	1.02	5.58	1.04	5.69	1.06	5.76	1.08	5.84	1.09	6.02	1.11	6.22	1.13
							14	4.07	1.04	5.43	1.07	5.55	1.09	5.63	1.10	5.71	1.11	5.89	1.14	6.10	1.16
							16	4.07	1.07	5.29	1.09	5.42	1.12	5.50	1.13	5.58	1.14	5.77	1.16	5.99	1.18
							18	4.07	1.09	5.15	1.12	5.29	1.14	5.37	1.15	5.46	1.17	5.66	1.19	5.89	1.21
							20	4.07	1.12	5.02	1.15	5.17	1.17	5.25	1.18	5.34	1.19	5.55	1.22	5.79	1.24
							21	4.07	1.14	4.96	1.16	5.11	1.18	5.19	1.20	5.29	1.21	5.50	1.23	5.74	1.25
							23	4.07	1.17	4.83	1.19	4.99	1.21	5.09	1.23	5.18	1.24	5.40	1.26	5.65	1.28
							25	4.07	1.20	4.72	1.22	4.89	1.24	4.98	1.25	5.09	1.27	5.31	1.29	5.57	1.31
							27	4.07	1.23	4.61	1.25	4.79	1.27	4.89	1.28	4.99	1.30	5.23	1.32	5.49	1.34
							29	4.07	1.26	4.51	1.28	4.69	1.30	4.80	1.32	4.91	1.33	5.15	1.35	5.42	1.37
							31	4.07	1.29	4.42	1.31	4.61	1.34	4.71	1.35	4.83	1.36	5.08	1.38	5.36	1.40
							33	4.07	1.32	4.33	1.35	4.53	1.37	4.64	1.38	4.76	1.39	5.01	1.41	5.30	1.43
							35	4.07	1.36	4.24	1.38	4.45	1.40	4.60	1.41	4.69	1.42	4.96	1.45	5.25	1.47
							37	4.07	1.39	4.17	1.41	4.38	1.44	4.50	1.45	4.63	1.46	4.90	1.48	5.21	1.50
							39	4.07	1.42	4.10	1.45	4.32	1.47	4.44	1.48	4.57	1.49	4.86	1.51	5.17	1.53
							42	4.07	1.48	4.01	1.50	4.24	1.52	4.37	1.54	4.51	1.55	4.80	1.57	5.12	1.59
							44	4.07	1.52	3.95	1.54	4.20	1.56	4.33	1.57	4.47	1.58	4.77	1.60	5.10	1.62
							46	4.07	1.55	3.90	1.58	4.16	1.60	4.29	1.61	4.44	1.62	4.75	1.64	5.09	1.66
2000	3500				5500	106%	10	4.42	1.07	6.23	1.09	6.35	1.12	6.42	1.13	6.50	1.15	6.68	1.17	6.90	1.19
							12	4.42	1.09	6.06	1.12	6.19	1.15	6.27	1.16	6.35	1.17	6.54	1.20	6.76	1.22
							14	4.42	1.12	5.90	1.15	6.04	1.17	6.12	1.19	6.20	1.20	6.40	1.22	6.63	1.25
							16	4.42	1.15	5.75	1.18	5.89	1.20	5.97	1.22	6.06	1.23	6.27	1.25	6.51	1.28
							18	4.42	1.18	5.60	1.21	5.75	1.23	5.84	1.24	5.93	1.26	6.15	1.28	6.40	1.30
							20	4.42	1.21	5.45	1.24	5.62	1.26	5.71	1.27	5.81	1.29	6.03	1.31	6.29	1.33
							21	4.42	1.23	5.39	1.25	5.55	1.28	5.65	1.29	5.75	1.30	5.98	1.33	6.24	1.35
							23	4.42	1.26	5.25	1.28	5.43	1.31	5.53	1.32	5.63	1.33	5.87	1.36	6.14	1.38
							25	4.42	1.29	5.13	1.31	5.31	1.34	5.42	1.35	5.53	1.36	5.77	1.39	6.05	1.41
							27	4.42	1.32	5.01	1.35	5.20	1.37	5.31	1.39	5.43	1.40	5.68	1.42	5.97	1.44
							29	4.42	1.36	4.90	1.38	5.10	1.41	5.21	1.42	5.33	1.43	5.60	1.45	5.89	1.48
							31	4.42	1.39	4.80	1.42	5.01	1.44	5.12	1.45	5.25	1.46	5.52	1.49	5.82	1.51
							33	4.42	1.42	4.70	1.45	4.92	1.48	5.04	1.49	5.17	1.50	5.45	1.52	5.76	1.55
							35	4.42	1.46	4.61	1.49	4.84	1.51	5.00	1.52	5.10	1.54	5.39	1.56	5.71	1.58
							37	4.42	1.50	4.53	1.52	4.76	1.55	4.89	1.56	5.03	1.57	5.33	1.60	5.66	1.62
							39	4.42	1.54	4.45	1.56	4.70	1.59	4.83	1.60	4.97	1.61	5.28	1.63	5.62	1.65
							42	4.42	1.59	4.35	1.62	4.61	1.64	4.75	1.66	4.90	1.67	5.22	1.69	5.57	1.71
							44	4.42	1.63	4.30	1.66	4.56	1.68	4.70	1.70	4.86	1.71	5.18	1.73	5.55	1.75
							46	4.42	1.67	4.24	1.70	4.52	1.72	4.67	1.74	4.82	1.75	5.16	1.77	5.53	1.79
2000	5000				7000	135%	10	4.60	1.08	6.48	1.11	6.61	1.14	6.68	1.15	6.76	1.16	6.95	1.19	7.17	1.21
							12	4.60	1.11	6.31	1.14	6.44	1.16	6.52	1.18	6.60	1.19	6.80	1.21	7.03	1.24
							14	4.60	1.14	6.14	1.16	6.28	1.19	6.36	1.20	6.45	1.22	6.66	1.24	6.90	1.26
							16	4.60	1.17	5.97	1.19	6.12	1.22	6.21	1.23	6.31	1.24	6.52	1.27	6.77	1.29
							18	4.60	1.20	5.82	1.22	5.98	1.25	6.07	1.26	6.17	1.27	6.40	1.30	6.65	1.32
							20	4.60	1.23	5.67	1.25	5.84	1.28	5.94	1.29	6.04	1.30	6.28	1.33	6.54	1.35
							21	4.60	1.24	5.60	1.27	5.77	1.29	5.87	1.31	5.98	1.32	6.22	1.34	6.49	1.37
							23	4.60	1.27	5.47	1.30	5.65	1.33	5.75	1.34	5.86	1.35	6.11	1.37	6.39	1.40
							25	4.60	1.31	5.34	1.33	5.53	1.36	5.63	1.37	5.75	1.38	6.01	1.41	6.29	1.43
							27	4.60	1.34	5.21	1.37	5.41	1.39	5.52	1.40	5.64	1.42	5.91	1.44	6.21	1.46
							29	4.60	1.37	5.10	1.40	5.31	1.42	5.42	1.44	5.55	1.45	5.82	1.47	6.13	1.50
							31	4.60	1.41	4.99	1.43	5.21	1.46	5.33	1.47	5.46	1.48	5.74	1.51	6.06	1.53
							33	4.60	1.44	4.89	1.47	5.12	1.50	5.24	1.51	5.38	1.52	5.67	1.54	5.99	1.57
							35	4.60	1.48	4.80	1.51	5.03	1.53	5.20	1.54	5.30	1.56	5.60	1.58	5.94	1.60
							37	4.60	1.52	4.71	1.54	4.95	1.57	5.09	1.58	5.23	1.59	5.54	1.62	5.89	1.64
							39	4.60	1.56	4.63	1.58	4.89	1.61	5.02	1.62	5.17	1.63	5.49	1.65	5.84	1.68
							42	4.60	1.61	4.53	1.64	4.79	1.67	4.94	1.68	5.09	1.69	5.43	1.71	5.79	1.73
							44	4.60	1.66	4.47	1.68	4.74	1.71	4.89	1.72	5.05	1.73	5.39	1.75	5.77	1.77
							46	4.60	1.70	4.41	1.72	4.70	1.75	4.85	1.76	5.02	1.77	5.37	1.79	5.75	1.81

* All figures comply with EN14511

1. Cooling capacity is based on 27°CDB / 19°CWB (indoor temperature), 35°CDB (outdoor temperature).
2. Heating capacity is based on 20°CDB (indoor temperature), 7°CDB/6°CWB (outdoor temperature).
3. Capacities are based on the following conditions : - Corresponding refrigerant piping length : 5m / - Level difference : 0m
4. The total ability of connected a indoor unit is up to 8.0kW
5. It is impossible to connect the indoor unit for one room only.
6. This data is reference data for temperature capacity trend.

3 AJ052FCJ3EH

1) Cooling

COOLING

Combination (Capacity Index)					Combination (Total)	Combination (%)	Outdoor Temperature (°C, DB)	Indoor Temperature(°C, WB)													
								14		16		18		19		20		22		24	
								TC(kW)	PI(kW)	TC(kW)	PI(kW)	TC(kW)	PI(kW)	TC(kW)	PI(kW)	TC(kW)	PI(kW)	TC(kW)	PI(kW)	TC(kW)	PI(kW)
2500	2500				5000	96%	10	4.42	1.09	6.23	1.12	6.35	1.14	6.42	1.16	6.50	1.17	6.68	1.19	6.90	1.22
							12	4.42	1.12	6.06	1.14	6.19	1.17	6.27	1.18	6.35	1.20	6.54	1.22	6.76	1.24
							14	4.42	1.14	5.90	1.17	6.04	1.20	6.12	1.21	6.20	1.22	6.40	1.25	6.63	1.27
							16	4.42	1.17	5.75	1.20	5.89	1.23	5.97	1.24	6.06	1.25	6.27	1.28	6.51	1.30
							18	4.42	1.20	5.60	1.23	5.75	1.26	5.84	1.27	5.93	1.28	6.15	1.31	6.40	1.33
							20	4.42	1.23	5.45	1.26	5.62	1.29	5.71	1.30	5.81	1.31	6.03	1.34	6.29	1.36
							21	4.42	1.25	5.39	1.28	5.55	1.30	5.65	1.32	5.75	1.33	5.98	1.35	6.24	1.38
							23	4.42	1.28	5.25	1.31	5.43	1.33	5.53	1.35	5.63	1.36	5.87	1.38	6.14	1.41
							25	4.42	1.31	5.13	1.34	5.31	1.37	5.42	1.38	5.53	1.39	5.77	1.42	6.05	1.44
							27	4.42	1.35	5.01	1.37	5.20	1.40	5.31	1.41	5.43	1.42	5.68	1.45	5.97	1.47
							29	4.42	1.38	4.90	1.41	5.10	1.43	5.21	1.45	5.33	1.46	5.60	1.48	5.89	1.51
							31	4.42	1.42	4.80	1.44	5.01	1.47	5.12	1.48	5.25	1.49	5.52	1.52	5.82	1.54
							33	4.42	1.45	4.70	1.48	4.92	1.50	5.04	1.52	5.17	1.53	5.45	1.55	5.76	1.58
							35	4.42	1.49	4.61	1.52	4.84	1.54	5.00	1.55	5.10	1.57	5.39	1.59	5.71	1.61
							37	4.42	1.53	4.53	1.55	4.76	1.58	4.89	1.59	5.03	1.60	5.33	1.63	5.66	1.65
							39	4.42	1.57	4.45	1.59	4.70	1.62	4.83	1.63	4.97	1.64	5.28	1.66	5.62	1.69
							42	4.42	1.63	4.35	1.65	4.61	1.68	4.75	1.69	4.90	1.70	5.22	1.72	5.57	1.75
							44	4.42	1.67	4.30	1.69	4.56	1.72	4.70	1.73	4.86	1.74	5.18	1.76	5.55	1.79
							46	4.42	1.71	4.24	1.73	4.52	1.76	4.67	1.77	4.82	1.78	5.16	1.80	5.53	1.83
2500	3500				6000	115%	10	4.42	1.06	6.23	1.09	6.35	1.11	6.42	1.13	6.50	1.14	6.68	1.16	6.90	1.19
							12	4.42	1.09	6.06	1.11	6.19	1.14	6.27	1.15	6.35	1.16	6.54	1.19	6.76	1.21
							14	4.42	1.11	5.90	1.14	6.04	1.17	6.12	1.18	6.20	1.19	6.40	1.22	6.63	1.24
							16	4.42	1.14	5.75	1.17	5.89	1.20	5.97	1.21	6.06	1.22	6.27	1.24	6.51	1.27
							18	4.42	1.17	5.60	1.20	5.75	1.22	5.84	1.24	5.93	1.25	6.15	1.27	6.40	1.30
							20	4.42	1.20	5.45	1.23	5.62	1.25	5.71	1.27	5.81	1.28	6.03	1.30	6.29	1.32
							21	4.42	1.22	5.39	1.24	5.55	1.27	5.65	1.28	5.75	1.29	5.98	1.32	6.24	1.34
							23	4.42	1.25	5.25	1.27	5.43	1.30	5.53	1.31	5.63	1.32	5.87	1.35	6.14	1.37
							25	4.42	1.28	5.13	1.31	5.31	1.33	5.42	1.34	5.53	1.36	5.77	1.38	6.05	1.40
							27	4.42	1.31	5.01	1.34	5.20	1.36	5.31	1.38	5.43	1.39	5.68	1.41	5.97	1.43
							29	4.42	1.35	4.90	1.37	5.10	1.40	5.21	1.41	5.33	1.42	5.60	1.44	5.89	1.47
							31	4.42	1.38	4.80	1.41	5.01	1.43	5.12	1.44	5.25	1.46	5.52	1.48	5.82	1.50
							33	4.42	1.42	4.70	1.44	4.92	1.47	5.04	1.48	5.17	1.49	5.45	1.51	5.76	1.53
							35	4.42	1.45	4.61	1.48	4.84	1.50	5.00	1.51	5.10	1.53	5.39	1.55	5.71	1.57
							37	4.42	1.49	4.53	1.51	4.76	1.54	4.89	1.55	5.03	1.56	5.33	1.58	5.66	1.61
							39	4.42	1.53	4.45	1.55	4.70	1.58	4.83	1.59	4.97	1.60	5.28	1.62	5.62	1.64
							42	4.42	1.58	4.35	1.61	4.61	1.63	4.75	1.64	4.90	1.66	5.22	1.68	5.57	1.70
							44	4.42	1.62	4.30	1.65	4.56	1.67	4.70	1.68	4.86	1.70	5.18	1.72	5.55	1.74
							46	4.42	1.66	4.24	1.69	4.52	1.71	4.67	1.72	4.82	1.74	5.16	1.76	5.53	1.78
2500	5000				7500	144%	10	4.60	1.08	6.48	1.11	6.61	1.14	6.68	1.15	6.76	1.16	6.95	1.19	7.17	1.21
							12	4.60	1.11	6.31	1.14	6.44	1.16	6.52	1.18	6.60	1.19	6.80	1.21	7.03	1.24
							14	4.60	1.14	6.14	1.16	6.28	1.19	6.36	1.20	6.45	1.22	6.66	1.24	6.90	1.26
							16	4.60	1.17	5.97	1.19	6.12	1.22	6.21	1.23	6.31	1.24	6.52	1.27	6.77	1.29
							18	4.60	1.20	5.82	1.22	5.98	1.25	6.07	1.26	6.17	1.27	6.40	1.30	6.65	1.32
							20	4.60	1.23	5.67	1.25	5.84	1.28	5.94	1.29	6.04	1.30	6.28	1.33	6.54	1.35
							21	4.60	1.24	5.60	1.27	5.77	1.29	5.87	1.31	5.98	1.32	6.22	1.34	6.49	1.37
							23	4.60	1.27	5.47	1.30	5.65	1.33	5.75	1.34	5.86	1.35	6.11	1.37	6.39	1.40
							25	4.60	1.31	5.34	1.33	5.53	1.36	5.63	1.37	5.75	1.38	6.01	1.41	6.29	1.43
							27	4.60	1.34	5.21	1.37	5.41	1.39	5.52	1.40	5.64	1.42	5.91	1.44	6.21	1.46
							29	4.60	1.37	5.10	1.40	5.31	1.42	5.42	1.44	5.55	1.45	5.82	1.47	6.13	1.50
							31	4.60	1.41	4.99	1.43	5.21	1.46	5.33	1.47	5.46	1.48	5.74	1.51	6.06	1.53
							33	4.60	1.44	4.89	1.47	5.12	1.50	5.24	1.51	5.38	1.52	5.67	1.54	5.99	1.57
							35	4.60	1.48	4.80	1.51	5.03	1.53	5.20	1.54	5.30	1.56	5.60	1.58	5.94	1.60
							37	4.60	1.52	4.71	1.54	4.95	1.57	5.09	1.58	5.23	1.59	5.54	1.62	5.89	1.64
							39	4.60	1.56	4.63	1.58	4.89	1.61	5.02	1.62	5.17	1.63	5.49	1.65	5.84	1.68
							42	4.60	1.61	4.53	1.64	4.79	1.67	4.94	1.68	5.09	1.69	5.43	1.71	5.79	1.73
							44	4.60	1.66	4.47	1.68	4.74	1.71	4.89	1.72	5.05	1.73	5.39	1.75	5.77	1.77
							46	4.60	1.70	4.41	1.72	4.70	1.75	4.85	1.76	5.02	1.77	5.37	1.79	5.75	1.81
3500	3500				7000	135%	10	4.60	1.08	6.48	1.11	6.61	1.14	6.68	1.15	6.76	1.16	6.95	1.19	7.17	1.21
							12	4.60	1.11	6.31	1.14	6.44	1.16	6.52	1.18	6.60	1.19	6.80	1.21	7.03	1.24
							14	4.60	1.14	6.14	1.16	6.28	1.19	6.36	1.20	6.45	1.22	6.66	1.24	6.90	1.26
							16	4.60	1.17	5.97	1.19	6.12	1.22	6.21	1.23	6.31	1.24	6.52	1.27	6.77	1.29
							18	4.60	1.20	5.82	1.22	5.98	1.25	6.07	1.26	6.17	1.27	6.40	1.30	6.65	1.32
							20	4.60	1.23	5.67	1.25	5.84	1.28	5.94	1.29	6.04	1.30	6.28	1.33	6.54	1.35
							21	4.60	1.24	5.60	1.27	5.77	1.29	5.87	1.31	5.98	1.32	6.22	1.34	6.49	1.37
							23	4.60	1.27	5.47	1.30	5.65	1.33	5.75	1.34	5.86	1.35	6.11	1.37	6.39	1.40
							25	4.60	1.31	5.34	1.33	5.53	1.36	5.63	1.37	5.75	1.38	6.01	1.41	6.29	1.43
							27	4.60	1.34	5.21	1.37	5.41	1.39	5.52	1.40	5.64	1.42	5.91	1.44	6.21	1.46
							29	4.60	1.37	5.10	1.40	5.31	1.42	5.42	1.44	5.55	1.45	5.82	1.47	6.13	1.50
							31	4.60	1.41	4.99	1.43	5.21	1.46	5.33	1.47	5.46	1.48	5.74	1.51	6.06	1.53
							33	4.60	1.44	4.89	1.47	5.12	1.50	5.24	1.51	5.38	1.52	5.67	1.54	5.99	1.57
							35	4.60	1.48	4.80	1.51	5.03	1.53	5.20	1.54	5.30	1.56	5.60	1.58	5.94	1.60
							37	4.60	1.52	4.71	1.54	4.95	1.57	5.09	1.58	5.23	1.59	5.54	1.62	5.89	1.64
							39	4.60	1.56	4.63	1.58	4.89	1.61	5.02	1.62	5.17	1.63	5.49	1.65	5.84	1.68
							42	4.60	1.61	4.53	1.64	4.79	1.67	4.94	1.68	5.09	1.69	5.43	1.71	5.79	1.73
							44	4.60	1.66	4.47	1.68	4.74	1.71	4.89	1.72	5.05	1.73	5.39	1.75	5.77	1.77
							46	4.60	1.70	4.41	1.72	4.70	1.75	4.85	1.76	5.02	1.77	5.37	1.79	5.75	1.81

* All figures comply with EN14511

1. Cooling capacity is based on 27°CDB / 19°CWB (indoor temperature), 35°CDB (outdoor temperature).
2. Heating capacity is based on 20°CDB (indoor temperature), 7°CDB/6°CWB (outdoor temperature).
3. Capacities are based on the following conditions : - Corresponding refrigerant piping length : 5m / - Level difference : 0m
4. The total ability of connected a indoor unit is up to 8.0kW
5. It is impossible to connect the indoor unit for one room only.
6. This data is reference data for temperature capacity trend.

1) Cooling

COOLING

Combination (Capacity Index)					Combination (Total)	Combination (%)	Outdoor Temperature (°C, DB)	Indoor Temperature(°C, WB)													
								14		16		18		19		20		22		24	
								TC(kW)	PI(kW)	TC(kW)	PI(kW)	TC(kW)	PI(kW)	TC(kW)	PI(kW)	TC(kW)	PI(kW)	TC(kW)	PI(kW)	TC(kW)	PI(kW)
2000	2000	2000			6000	115%	10	4.60	1.05	6.48	1.08	6.61	1.11	6.68	1.12	6.76	1.13	6.95	1.16	7.17	1.18
							12	4.60	1.08	6.31	1.11	6.44	1.13	6.52	1.14	6.60	1.16	6.80	1.18	7.03	1.20
							14	4.60	1.11	6.14	1.13	6.28	1.16	6.36	1.17	6.45	1.18	6.66	1.21	6.90	1.23
							16	4.60	1.14	5.97	1.16	6.12	1.19	6.21	1.20	6.31	1.21	6.52	1.24	6.77	1.26
							18	4.60	1.16	5.82	1.19	5.98	1.22	6.07	1.23	6.17	1.24	6.40	1.26	6.65	1.29
							20	4.60	1.19	5.67	1.22	5.84	1.25	5.94	1.26	6.04	1.27	6.28	1.29	6.54	1.32
							21	4.60	1.21	5.60	1.24	5.77	1.26	5.87	1.27	5.98	1.28	6.22	1.31	6.49	1.33
							23	4.60	1.24	5.47	1.27	5.65	1.29	5.75	1.30	5.86	1.32	6.11	1.34	6.39	1.36
							25	4.60	1.27	5.34	1.30	5.53	1.32	5.63	1.33	5.75	1.35	6.01	1.37	6.29	1.39
							27	4.60	1.30	5.21	1.33	5.41	1.35	5.52	1.37	5.64	1.38	5.91	1.40	6.21	1.42
							29	4.60	1.34	5.10	1.36	5.31	1.39	5.42	1.40	5.55	1.41	5.82	1.43	6.13	1.46
							31	4.60	1.37	4.99	1.40	5.21	1.42	5.33	1.43	5.46	1.45	5.74	1.47	6.06	1.49
							33	4.60	1.41	4.89	1.43	5.12	1.46	5.24	1.47	5.38	1.48	5.67	1.50	5.99	1.52
							35	4.60	1.44	4.80	1.47	5.03	1.49	5.20	1.50	5.30	1.52	5.60	1.54	5.94	1.56
							37	4.60	1.48	4.71	1.50	4.95	1.53	5.09	1.54	5.23	1.55	5.54	1.57	5.89	1.60
							39	4.60	1.52	4.63	1.54	4.89	1.56	5.02	1.58	5.17	1.59	5.49	1.61	5.84	1.63
							42	4.60	1.57	4.53	1.60	4.79	1.62	4.94	1.63	5.09	1.65	5.43	1.67	5.79	1.69
							44	4.60	1.61	4.47	1.64	4.74	1.66	4.89	1.67	5.05	1.68	5.39	1.71	5.77	1.73
							46	4.60	1.65	4.41	1.68	4.70	1.70	4.85	1.71	5.02	1.72	5.37	1.75	5.75	1.77
2000	2000	2500			6500	125%	10	4.60	1.07	6.48	1.10	6.61	1.13	6.68	1.14	6.76	1.15	6.95	1.18	7.17	1.20
							12	4.60	1.10	6.31	1.13	6.44	1.16	6.52	1.17	6.60	1.18	6.80	1.20	7.03	1.23
							14	4.60	1.13	6.14	1.16	6.28	1.18	6.36	1.20	6.45	1.21	6.66	1.23	6.90	1.26
							16	4.60	1.16	5.97	1.19	6.12	1.21	6.21	1.22	6.31	1.24	6.52	1.26	6.77	1.28
							18	4.60	1.19	5.82	1.21	5.98	1.24	6.07	1.25	6.17	1.27	6.40	1.29	6.65	1.31
							20	4.60	1.22	5.67	1.24	5.84	1.27	5.94	1.28	6.04	1.30	6.28	1.32	6.54	1.34
							21	4.60	1.23	5.60	1.26	5.77	1.29	5.87	1.30	5.98	1.31	6.22	1.33	6.49	1.36
							23	4.60	1.26	5.47	1.29	5.65	1.32	5.75	1.33	5.86	1.34	6.11	1.37	6.39	1.39
							25	4.60	1.30	5.34	1.32	5.53	1.35	5.63	1.36	5.75	1.37	6.01	1.40	6.29	1.42
							27	4.60	1.33	5.21	1.36	5.41	1.38	5.52	1.39	5.64	1.41	5.91	1.43	6.21	1.45
							29	4.60	1.36	5.10	1.39	5.31	1.42	5.42	1.43	5.55	1.44	5.82	1.46	6.13	1.49
							31	4.60	1.40	4.99	1.42	5.21	1.45	5.33	1.46	5.46	1.47	5.74	1.50	6.06	1.52
							33	4.60	1.43	4.89	1.46	5.12	1.49	5.24	1.50	5.38	1.51	5.67	1.53	5.99	1.56
							35	4.60	1.47	4.80	1.50	5.03	1.52	5.20	1.53	5.30	1.55	5.60	1.57	5.94	1.59
							37	4.60	1.51	4.71	1.53	4.95	1.56	5.09	1.57	5.23	1.58	5.54	1.61	5.89	1.63
							39	4.60	1.55	4.63	1.57	4.89	1.60	5.02	1.61	5.17	1.62	5.49	1.64	5.84	1.67
							42	4.60	1.60	4.53	1.63	4.79	1.65	4.94	1.67	5.09	1.68	5.43	1.70	5.79	1.72
							44	4.60	1.64	4.47	1.67	4.74	1.69	4.89	1.71	5.05	1.72	5.39	1.74	5.77	1.76
							46	4.60	1.69	4.41	1.71	4.70	1.73	4.85	1.75	5.02	1.76	5.37	1.78	5.75	1.80
2000	2000	3500			7500	144%	10	4.60	1.00	6.48	1.02	6.61	1.05	6.68	1.06	6.76	1.07	6.95	1.09	7.17	1.12
							12	4.60	1.02	6.31	1.05	6.44	1.07	6.52	1.08	6.60	1.10	6.80	1.12	7.03	1.14
							14	4.60	1.05	6.14	1.07	6.28	1.10	6.36	1.11	6.45	1.12	6.66	1.14	6.90	1.17
							16	4.60	1.07	5.97	1.10	6.12	1.12	6.21	1.14	6.31	1.15	6.52	1.17	6.77	1.19
							18	4.60	1.10	5.82	1.13	5.98	1.15	6.07	1.16	6.17	1.17	6.40	1.20	6.65	1.22
							20	4.60	1.13	5.67	1.16	5.84	1.18	5.94	1.19	6.04	1.20	6.28	1.22	6.54	1.25
							21	4.60	1.14	5.60	1.17	5.77	1.19	5.87	1.20	5.98	1.22	6.22	1.24	6.49	1.26
							23	4.60	1.17	5.47	1.20	5.65	1.22	5.75	1.23	5.86	1.25	6.11	1.27	6.39	1.29
							25	4.60	1.20	5.34	1.23	5.53	1.25	5.63	1.26	5.75	1.27	6.01	1.30	6.29	1.32
							27	4.60	1.23	5.21	1.26	5.41	1.28	5.52	1.29	5.64	1.31	5.91	1.33	6.21	1.35
							29	4.60	1.27	5.10	1.29	5.31	1.31	5.42	1.33	5.55	1.34	5.82	1.36	6.13	1.38
							31	4.60	1.30	4.99	1.32	5.21	1.35	5.33	1.36	5.46	1.37	5.74	1.39	6.06	1.41
							33	4.60	1.33	4.89	1.36	5.12	1.38	5.24	1.39	5.38	1.40	5.67	1.42	5.99	1.44
							35	4.60	1.36	4.80	1.39	5.03	1.41	5.20	1.42	5.30	1.43	5.60	1.46	5.94	1.48
							37	4.60	1.40	4.71	1.42	4.95	1.45	5.09	1.46	5.23	1.47	5.54	1.49	5.89	1.51
							39	4.60	1.43	4.63	1.46	4.89	1.48	5.02	1.49	5.17	1.50	5.49	1.52	5.84	1.55
							42	4.60	1.49	4.53	1.51	4.79	1.54	4.94	1.55	5.09	1.56	5.43	1.58	5.79	1.60
							44	4.60	1.53	4.47	1.55	4.74	1.57	4.89	1.58	5.05	1.59	5.39	1.62	5.77	1.64
							46	4.60	1.56	4.41	1.59	4.70	1.61	4.85	1.62	5.02	1.63	5.37	1.65	5.75	1.67

* All figures comply with EN14511

1. Cooling capacity is based on 27°CDB / 19°CWB (indoor temperature), 35°CDB (outdoor temperature).
2. Heating capacity is based on 20°CDB (indoor temperature), 7°CDB/6°CWB (outdoor temperature).
3. Capacities are based on the following conditions : - Corresponding refrigerant piping length : 5m / - Level difference : 0m
4. The total ability of connected a indoor unit is up to 8.0kW
5. It is impossible to connect the indoor unit for one room only.
6. This data is reference data for temperature capacity trend.

3 AJ052FCJ3EH

1) Cooling

	Combination (Capacity Index)					Combination (Total)	Combination (%)	Outdoor Temperature (°C, DB)	Indoor Temperature(°C, WB)													
									14		16		18		19		20		22		24	
									TC(kW)	PI(kW)	TC(kW)	PI(kW)	TC(kW)	PI(kW)	TC(kW)	PI(kW)	TC(kW)	PI(kW)	TC(kW)	PI(kW)	TC(kW)	PI(kW)
COOLING	2000	2500	2500			7000	135%	10	4.60	0.98	6.48	1.00	6.61	1.03	6.68	1.04	6.76	1.05	6.95	1.07	7.17	1.09
								12	4.60	1.00	6.31	1.03	6.44	1.05	6.52	1.06	6.60	1.07	6.80	1.09	7.03	1.12
								14	4.60	1.03	6.14	1.05	6.28	1.07	6.36	1.09	6.45	1.10	6.66	1.12	6.90	1.14
								16	4.60	1.05	5.97	1.08	6.12	1.10	6.21	1.11	6.31	1.12	6.52	1.15	6.77	1.17
								18	4.60	1.08	5.82	1.10	5.98	1.13	6.07	1.14	6.17	1.15	6.40	1.17	6.65	1.19
								20	4.60	1.11	5.67	1.13	5.84	1.15	5.94	1.17	6.04	1.18	6.28	1.20	6.54	1.22
								21	4.60	1.12	5.60	1.14	5.77	1.17	5.87	1.18	5.98	1.19	6.22	1.21	6.49	1.23
								23	4.60	1.15	5.47	1.17	5.65	1.20	5.75	1.21	5.86	1.22	6.11	1.24	6.39	1.26
								25	4.60	1.18	5.34	1.20	5.53	1.23	5.63	1.24	5.75	1.25	6.01	1.27	6.29	1.29
								27	4.60	1.21	5.21	1.23	5.41	1.26	5.52	1.27	5.64	1.28	5.91	1.30	6.21	1.32
								29	4.60	1.24	5.10	1.26	5.31	1.29	5.42	1.30	5.55	1.31	5.82	1.33	6.13	1.35
								31	4.60	1.27	4.99	1.29	5.21	1.32	5.33	1.33	5.46	1.34	5.74	1.36	6.06	1.38
								33	4.60	1.30	4.89	1.33	5.12	1.35	5.24	1.36	5.38	1.37	5.67	1.39	5.99	1.41
								35	4.60	1.34	4.80	1.36	5.03	1.38	5.20	1.39	5.30	1.40	5.60	1.43	5.94	1.45
								37	4.60	1.37	4.71	1.39	4.95	1.42	5.09	1.43	5.23	1.44	5.54	1.46	5.89	1.48
								39	4.60	1.40	4.63	1.43	4.89	1.45	5.02	1.46	5.17	1.47	5.49	1.49	5.84	1.51
								42	4.60	1.46	4.53	1.48	4.79	1.50	4.94	1.51	5.09	1.52	5.43	1.55	5.79	1.57
								44	4.60	1.49	4.47	1.52	4.74	1.54	4.89	1.55	5.05	1.56	5.39	1.58	5.77	1.60
								46	4.60	1.53	4.41	1.55	4.70	1.58	4.85	1.59	5.02	1.60	5.37	1.62	5.75	1.64
	2000	2500	3500			8000	154%	10	5.85	1.00	6.08	1.02	6.31	1.04	6.43	1.05	6.55	1.06	6.79	1.08	7.03	1.10
								12	5.75	1.02	5.98	1.04	6.21	1.07	6.33	1.08	6.45	1.09	6.69	1.11	6.93	1.13
								14	5.64	1.05	5.87	1.07	6.11	1.09	6.23	1.10	6.35	1.11	6.59	1.14	6.83	1.16
								16	5.54	1.08	5.77	1.10	6.01	1.12	6.13	1.13	6.25	1.14	6.49	1.16	6.73	1.19
								18	5.44	1.11	5.67	1.13	5.91	1.15	6.03	1.16	6.15	1.17	6.39	1.19	6.63	1.22
								20	5.34	1.13	5.57	1.16	5.81	1.18	5.93	1.19	6.05	1.20	6.29	1.22	6.54	1.24
								21	5.29	1.15	5.52	1.17	5.76	1.19	5.88	1.20	6.00	1.22	6.24	1.24	6.49	1.26
								23	5.19	1.18	5.42	1.20	5.66	1.22	5.78	1.23	5.90	1.25	6.14	1.27	6.39	1.29
								25	5.09	1.21	5.32	1.23	5.56	1.25	5.68	1.26	5.80	1.28	6.04	1.30	6.29	1.32
								27	4.99	1.24	5.23	1.26	5.46	1.28	5.58	1.30	5.70	1.31	5.95	1.33	6.19	1.35
								29	4.89	1.27	5.13	1.29	5.36	1.32	5.48	1.33	5.60	1.34	5.85	1.36	6.10	1.38
								31	4.79	1.30	5.03	1.32	5.27	1.35	5.39	1.36	5.51	1.37	5.75	1.39	6.00	1.41
								33	4.69	1.33	4.93	1.36	5.17	1.38	5.29	1.39	5.41	1.40	5.65	1.42	5.90	1.45
								35	4.60	1.37	4.83	1.39	5.07	1.41	5.20	1.42	5.31	1.43	5.56	1.46	5.81	1.48
								37	4.50	1.40	4.73	1.42	4.97	1.44	5.09	1.46	5.22	1.47	5.46	1.49	5.71	1.51
								39	4.40	1.43	4.64	1.46	4.88	1.48	5.00	1.49	5.12	1.50	5.36	1.52	5.61	1.55
								42	4.25	1.48	4.49	1.51	4.73	1.53	4.85	1.54	4.97	1.55	5.22	1.58	5.47	1.60
								44	4.16	1.52	4.39	1.54	4.63	1.56	4.76	1.58	4.88	1.59	5.13	1.61	5.38	1.64
								46	4.06	1.55	4.30	1.58	4.54	1.60	4.66	1.61	4.78	1.62	5.03	1.65	5.28	1.67

* All figures comply with EN14511

1. Cooling capacity is based on 27°CDB / 19°CWB (indoor temperature), 35°CDB (outdoor temperature).
2. Heating capacity is based on 20°CDB (indoor temperature), 7°CDB/6°CWB (outdoor temperature).
3. Capacities are based on the following conditions : - Corresponding refrigerant piping length : 5m / - Level difference : 0m
4. The total ability of connected a indoor unit is up to 8.0kW
5. It is impossible to connect the indoor unit for one room only.
6. This data is reference data for temperature capacity trend.

1) Cooling

COOLING

Combination (Capacity Index)					Combination (Total)	Combination (%)	Outdoor Temperature (°C, DB)	Indoor Temperature(°C, WB)													
								14		16		18		19		20		22		24	
								TC(kW)	PI(kW)	TC(kW)	PI(kW)	TC(kW)	PI(kW)	TC(kW)	PI(kW)	TC(kW)	PI(kW)	TC(kW)	PI(kW)	TC(kW)	PI(kW)
2500	2500	2500			7500	144%	10	5.85	0.95	6.08	0.97	6.31	0.99	6.43	1.00	6.55	1.01	6.79	1.03	7.03	1.05
							12	5.75	0.97	5.98	0.99	6.21	1.01	6.33	1.02	6.45	1.03	6.69	1.05	6.93	1.07
							14	5.64	1.00	5.87	1.02	6.11	1.04	6.23	1.05	6.35	1.06	6.59	1.08	6.83	1.10
							16	5.54	1.02	5.77	1.05	6.01	1.07	6.13	1.08	6.25	1.09	6.49	1.11	6.73	1.13
							18	5.44	1.05	5.67	1.07	5.91	1.09	6.03	1.10	6.15	1.11	6.39	1.13	6.63	1.16
							20	5.34	1.08	5.57	1.10	5.81	1.12	5.93	1.13	6.05	1.14	6.29	1.16	6.54	1.18
							21	5.29	1.09	5.52	1.11	5.76	1.13	5.88	1.14	6.00	1.16	6.24	1.18	6.49	1.20
							23	5.19	1.12	5.42	1.14	5.66	1.16	5.78	1.17	5.90	1.18	6.14	1.20	6.39	1.23
							25	5.09	1.15	5.32	1.17	5.56	1.19	5.68	1.20	5.80	1.21	6.04	1.23	6.29	1.25
							27	4.99	1.18	5.23	1.20	5.46	1.22	5.58	1.23	5.70	1.24	5.95	1.26	6.19	1.28
							29	4.89	1.21	5.13	1.23	5.36	1.25	5.48	1.26	5.60	1.27	5.85	1.29	6.10	1.31
							31	4.79	1.24	5.03	1.26	5.27	1.28	5.39	1.29	5.51	1.30	5.75	1.32	6.00	1.35
							33	4.69	1.27	4.93	1.29	5.17	1.31	5.29	1.32	5.41	1.33	5.65	1.35	5.90	1.38
							35	4.60	1.30	4.83	1.32	5.07	1.34	5.20	1.35	5.31	1.36	5.56	1.39	5.81	1.41
							37	4.50	1.33	4.73	1.35	4.97	1.37	5.09	1.38	5.22	1.40	5.46	1.42	5.71	1.44
							39	4.40	1.36	4.64	1.38	4.88	1.41	5.00	1.42	5.12	1.43	5.36	1.45	5.61	1.47
							42	4.25	1.41	4.49	1.43	4.73	1.45	4.85	1.47	4.97	1.48	5.22	1.50	5.47	1.52
							44	4.16	1.44	4.39	1.47	4.63	1.49	4.76	1.50	4.88	1.51	5.13	1.53	5.38	1.56
							46	4.06	1.48	4.30	1.50	4.54	1.52	4.66	1.53	4.78	1.54	5.03	1.57	5.28	1.59
2500	2500	3500			8500	163%	10	5.85	0.95	6.08	0.97	6.31	0.99	6.43	1.00	6.55	1.01	6.79	1.03	7.03	1.05
							12	5.75	0.97	5.98	0.99	6.21	1.01	6.33	1.02	6.45	1.03	6.69	1.05	6.93	1.07
							14	5.64	1.00	5.87	1.02	6.11	1.04	6.23	1.05	6.35	1.06	6.59	1.08	6.83	1.10
							16	5.54	1.02	5.77	1.05	6.01	1.07	6.13	1.08	6.25	1.09	6.49	1.11	6.73	1.13
							18	5.44	1.05	5.67	1.07	5.91	1.09	6.03	1.10	6.15	1.11	6.39	1.13	6.63	1.16
							20	5.34	1.08	5.57	1.10	5.81	1.12	5.93	1.13	6.05	1.14	6.29	1.16	6.54	1.18
							21	5.29	1.09	5.52	1.11	5.76	1.13	5.88	1.14	6.00	1.16	6.24	1.18	6.49	1.20
							23	5.19	1.12	5.42	1.14	5.66	1.16	5.78	1.17	5.90	1.18	6.14	1.20	6.39	1.23
							25	5.09	1.15	5.32	1.17	5.56	1.19	5.68	1.20	5.80	1.21	6.04	1.23	6.29	1.25
							27	4.99	1.18	5.23	1.20	5.46	1.22	5.58	1.23	5.70	1.24	5.95	1.26	6.19	1.28
							29	4.89	1.21	5.13	1.23	5.36	1.25	5.48	1.26	5.60	1.27	5.85	1.29	6.10	1.31
							31	4.79	1.24	5.03	1.26	5.27	1.28	5.39	1.29	5.51	1.30	5.75	1.32	6.00	1.35
							33	4.69	1.27	4.93	1.29	5.17	1.31	5.29	1.32	5.41	1.33	5.65	1.35	5.90	1.38
							35	4.60	1.30	4.83	1.32	5.07	1.34	5.20	1.35	5.31	1.36	5.56	1.39	5.81	1.41
							37	4.50	1.33	4.73	1.35	4.97	1.37	5.09	1.38	5.22	1.40	5.46	1.42	5.71	1.44
							39	4.40	1.36	4.64	1.38	4.88	1.41	5.00	1.42	5.12	1.43	5.36	1.45	5.61	1.47
							42	4.25	1.41	4.49	1.43	4.73	1.45	4.85	1.47	4.97	1.48	5.22	1.50	5.47	1.52
							44	4.16	1.44	4.39	1.47	4.63	1.49	4.76	1.50	4.88	1.51	5.13	1.53	5.38	1.56
							46	4.06	1.48	4.30	1.50	4.54	1.52	4.66	1.53	4.78	1.54	5.03	1.57	5.28	1.59

* All figures comply with EN14511

1. Cooling capacity is based on 27°CDB / 19°CWB (indoor temperature), 35°CDB (outdoor temperature).
2. Heating capacity is based on 20°CDB (indoor temperature), 7°CDB/6°CWB (outdoor temperature).
3. Capacities are based on the following conditions : - Corresponding refrigerant piping length : 5m / - Level difference : 0m
4. The total ability of connected a indoor unit is up to 8.0kW
5. It is impossible to connect the indoor unit for one room only.
6. This data is reference data for temperature capacity trend.

3 AJ052FCJ3EH

2) Heating

HEATING

Combination (Capacity Index)					Combination (Total)	Combination (%)	Outdoor Temperature (°C, DB)	Indoor Temperature(°C, WB)													
								14		16		18		20		21		22		24	
								TC(kW)	PI(kW)	TC(kW)	PI(kW)	TC(kW)	PI(kW)	TC(kW)	PI(kW)	TC(kW)	PI(kW)	TC(kW)	PI(kW)	TC(kW)	PI(kW)
2000					2000	38%	-15	1.26	0.72	1.22	0.73	1.18	0.74	1.17	0.75	1.15	0.75	1.13	0.76	1.11	0.77
							-10	1.51	0.76	1.47	0.77	1.43	0.78	1.41	0.79	1.40	0.79	1.37	0.80	1.34	0.81
							-5	1.76	0.80	1.71	0.81	1.67	0.82	1.66	0.83	1.64	0.83	1.61	0.84	1.58	0.85
							0	2.01	0.84	1.96	0.85	1.92	0.86	1.90	0.87	1.88	0.87	1.85	0.88	1.82	0.89
							2	2.11	0.85	2.06	0.86	2.02	0.88	2.00	0.88	1.98	0.89	1.95	0.89	1.92	0.90
							7	2.31	0.88	2.26	0.89	2.21	0.91	2.20	0.91	2.17	0.92	2.14	0.93	2.11	0.93
							10	2.51	0.91	2.46	0.92	2.41	0.94	2.39	0.94	2.37	0.95	2.33	0.96	2.30	0.97
							15	2.76	0.95	2.71	0.96	2.66	0.97	2.64	0.98	2.61	0.99	2.57	1.00	2.54	1.01
2500					2500	48%	-15	1.89	0.91	1.83	0.93	1.78	0.94	1.75	0.95	1.73	0.95	1.69	0.96	1.66	0.97
							-10	2.26	0.96	2.20	0.98	2.14	0.99	2.12	1.00	2.09	1.00	2.05	1.01	2.02	1.02
							-5	2.64	1.01	2.57	1.02	2.51	1.04	2.48	1.04	2.46	1.05	2.41	1.06	2.37	1.07
							0	3.01	1.06	2.94	1.07	2.88	1.09	2.85	1.09	2.82	1.10	2.77	1.11	2.73	1.12
							2	3.16	1.08	3.09	1.09	3.03	1.11	3.00	1.11	2.97	1.12	2.92	1.13	2.87	1.14
							7	3.46	1.11	3.39	1.13	3.32	1.14	3.30	1.15	3.26	1.16	3.21	1.17	3.16	1.18
							10	3.76	1.15	3.69	1.17	3.62	1.18	3.59	1.19	3.55	1.20	3.50	1.21	3.45	1.22
							15	4.14	1.20	4.06	1.21	3.99	1.23	3.95	1.24	3.92	1.25	3.86	1.26	3.81	1.27
3500					3500	67%	-15	2.29	1.07	2.22	1.09	2.15	1.10	2.13	1.11	2.10	1.12	2.05	1.13	2.01	1.14
							-10	2.74	1.13	2.67	1.15	2.60	1.16	2.57	1.17	2.54	1.17	2.49	1.19	2.44	1.20
							-5	3.20	1.19	3.12	1.20	3.04	1.22	3.01	1.23	2.98	1.23	2.92	1.25	2.88	1.26
							0	3.65	1.24	3.57	1.26	3.49	1.28	3.46	1.28	3.42	1.29	3.36	1.30	3.31	1.32
							2	3.83	1.26	3.75	1.28	3.67	1.30	3.63	1.31	3.60	1.31	3.54	1.33	3.48	1.34
							7	4.20	1.31	4.11	1.33	4.03	1.34	4.00	1.35	3.95	1.36	3.89	1.37	3.83	1.39
							10	4.56	1.35	4.47	1.37	4.38	1.39	4.35	1.40	4.31	1.41	4.24	1.42	4.18	1.43
							15	5.02	1.40	4.92	1.43	4.83	1.44	4.79	1.45	4.75	1.46	4.68	1.48	4.62	1.49
5000					5000	0.96%	-15	3.21	1.45	3.11	1.47	3.02	1.49	2.98	1.50	2.94	1.50	2.87	1.52	2.82	1.53
							-10	3.84	1.52	3.73	1.55	3.64	1.57	3.60	1.57	3.55	1.58	3.48	1.60	3.42	1.61
							-5	4.48	1.60	4.36	1.62	4.26	1.64	4.22	1.65	4.17	1.66	4.09	1.68	4.03	1.69
							0	5.11	1.67	4.99	1.70	4.89	1.72	4.84	1.73	4.79	1.74	4.71	1.76	4.63	1.77
							2	5.37	1.70	5.25	1.73	5.14	1.75	5.09	1.76	5.04	1.77	4.95	1.79	4.88	1.81
							7	5.88	1.76	5.75	1.79	5.64	1.81	5.60	1.82	5.54	1.83	5.44	1.85	5.36	1.87
							10	6.39	1.82	6.26	1.85	6.14	1.87	6.08	1.88	6.03	1.89	5.94	1.92	5.85	1.93
							15	7.03	1.89	6.89	1.92	6.77	1.95	6.71	1.96	6.65	1.97	6.55	1.99	6.46	2.01
2000	2000				4000	77%	-15	2.52	0.97	2.44	0.98	2.37	1.00	2.34	1.00	2.31	1.01	2.26	1.02	2.21	1.03
							-10	3.02	1.02	2.93	1.04	2.86	1.05	2.82	1.06	2.79	1.06	2.74	1.07	2.69	1.08
							-5	3.52	1.07	3.43	1.09	3.35	1.10	3.31	1.11	3.28	1.11	3.22	1.13	3.16	1.14
							0	4.02	1.12	3.92	1.14	3.84	1.15	3.80	1.16	3.76	1.17	3.70	1.18	3.64	1.19
							2	4.22	1.14	4.12	1.16	4.04	1.17	4.00	1.18	3.96	1.19	3.89	1.20	3.83	1.21
							7	4.62	1.18	4.52	1.20	4.43	1.21	4.40	1.22	4.35	1.23	4.28	1.24	4.21	1.25
							10	5.02	1.22	4.92	1.24	4.82	1.25	4.78	1.26	4.74	1.27	4.66	1.28	4.60	1.30
							15	5.52	1.27	5.41	1.29	5.32	1.31	5.27	1.31	5.23	1.32	5.15	1.34	5.08	1.35
2000	2500				4500	87%	-15	2.92	1.12	2.83	1.14	2.75	1.15	2.71	1.16	2.68	1.17	2.62	1.18	2.56	1.19
							-10	3.50	1.18	3.40	1.20	3.31	1.21	3.27	1.22	3.24	1.23	3.17	1.24	3.12	1.25
							-5	4.08	1.24	3.97	1.26	3.88	1.27	3.84	1.28	3.80	1.29	3.73	1.30	3.67	1.31
							0	4.66	1.30	4.55	1.31	4.45	1.33	4.41	1.34	4.36	1.35	4.29	1.36	4.22	1.37
							2	4.89	1.32	4.78	1.34	4.68	1.36	4.63	1.36	4.59	1.37	4.51	1.39	4.44	1.40
							7	5.35	1.36	5.24	1.38	5.13	1.40	5.10	1.41	5.04	1.42	4.96	1.44	4.89	1.45
							10	5.82	1.41	5.70	1.43	5.59	1.45	5.54	1.46	5.49	1.47	5.41	1.48	5.33	1.50
							15	6.40	1.47	6.28	1.49	6.16	1.51	6.11	1.52	6.06	1.53	5.97	1.54	5.88	1.56
2000	3500				5500	106%	-15	3.21	1.22	3.11	1.24	3.02	1.26	2.98	1.27	2.94	1.27	2.87	1.29	2.82	1.30
							-10	3.84	1.29	3.73	1.31	3.64	1.32	3.60	1.33	3.55	1.34	3.48	1.35	3.42	1.36
							-5	4.48	1.35	4.36	1.37	4.26	1.39	4.22	1.40	4.17	1.41	4.09	1.42	4.03	1.43
							0	5.11	1.42	4.99	1.44	4.89	1.46	4.84	1.46	4.79	1.47	4.71	1.49	4.63	1.50
							2	5.37	1.44	5.25	1.46	5.14	1.48	5.09	1.49	5.04	1.50	4.95	1.51	4.88	1.53
							7	5.88	1.49	5.75	1.51	5.64	1.53	5.60	1.54	5.54	1.55	5.44	1.57	5.36	1.58
							10	6.39	1.54	6.26	1.56	6.14	1.58	6.08	1.59	6.03	1.60	5.94	1.62	5.85	1.64
							15	7.03	1.60	6.89	1.63	6.77	1.65	6.71	1.66	6.65	1.67	6.55	1.69	6.46	1.70
2000	5000				7000	135%	-15	3.43	1.32	3.33	1.34	3.23	1.36	3.19	1.36	3.15	1.37	3.08	1.39	3.02	1.40
							-10	4.11	1.39	4.00	1.41	3.90	1.43	3.85	1.44	3.81	1.44	3.73	1.46	3.67	1.47
							-5	4.80	1.46	4.67	1.48	4.57	1.50	4.52	1.51	4.47	1.52	4.39	1.53	4.31	1.54
							0	5.48	1.53	5.35	1.55	5.24	1.57	5.18	1.58	5.13	1.59	5.04	1.60	4.97	1.62
							2	5.75	1.55	5.62	1.58	5.50	1.60	5.45	1.61	5.40	1.62	5.31	1.63	5.23	1.65
							7	6.30	1.61	6.16	1.63	6.04	1.65	6.00	1.66	5.93	1.67	5.83	1.69	5.75	1.71
							10	6.84	1.66	6.70	1.68	6.58	1.71	6.52	1.72	6.46	1.73	6.36	1.75	6.27	1.76
							15	7.53	1.73	7.38	1.75	7.25	1.78	7.19	1.79	7.13	1.80	7.02	1.82	6.92	1.84

* All figures comply with EN14511

1. Cooling capacity is based on 27°CDB / 19°CWB (indoor temperature), 35°CDB (outdoor temperature).
2. Heating capacity is based on 20°CDB (indoor temperature), 7°CDB/6°CWB (outdoor temperature).
3. Capacities are based on the following conditions : - Corresponding refrigerant piping length : 5m / - Level difference : 0m
4. The total ability of connected a indoor unit is up to 8.0kW
5. It is impossible to connect the indoor unit for one room only.
6. This data is reference data for temperature capacity trend.

2) Heating

HEATING

Combination (Capacity Index)					Combination (Total)	Combination (%)	Outdoor Temperature (°C, DB)	Indoor Temperature(°C, WB)													
								14		16		18		20		21		22		24	
								TC(kW)	PI(kW)	TC(kW)	PI(kW)	TC(kW)	PI(kW)	TC(kW)	PI(kW)	TC(kW)	PI(kW)	TC(kW)	PI(kW)	TC(kW)	PI(kW)
2500	2500				5000	96%	-15	3.32	1.27	3.22	1.29	3.12	1.31	3.08	1.32	3.04	1.32	2.97	1.34	2.92	1.35
							-10	3.98	1.34	3.87	1.36	3.77	1.38	3.72	1.38	3.68	1.39	3.61	1.41	3.54	1.42
							-5	4.64	1.40	4.52	1.43	4.41	1.44	4.37	1.45	4.32	1.46	4.24	1.48	4.17	1.49
							0	5.29	1.47	5.17	1.49	5.06	1.51	5.01	1.52	4.96	1.53	4.88	1.55	4.80	1.56
							2	5.56	1.50	5.43	1.52	5.32	1.54	5.27	1.55	5.22	1.56	5.13	1.57	5.05	1.59
							7	6.09	1.55	5.96	1.57	5.84	1.59	5.80	1.60	5.73	1.61	5.64	1.63	5.56	1.64
							10	6.62	1.60	6.48	1.62	6.36	1.65	6.30	1.66	6.25	1.67	6.15	1.68	6.06	1.70
							15	7.28	1.66	7.14	1.69	7.01	1.71	6.95	1.72	6.89	1.73	6.79	1.75	6.69	1.77
2500	3500				6000	115%	-15	3.32	1.27	3.22	1.29	3.12	1.31	3.08	1.32	3.04	1.32	2.97	1.34	2.92	1.35
							-10	3.98	1.34	3.87	1.36	3.77	1.38	3.72	1.38	3.68	1.39	3.61	1.41	3.54	1.42
							-5	4.64	1.40	4.52	1.43	4.41	1.44	4.37	1.45	4.32	1.46	4.24	1.48	4.17	1.49
							0	5.29	1.47	5.17	1.49	5.06	1.51	5.01	1.52	4.96	1.53	4.88	1.55	4.80	1.56
							2	5.56	1.50	5.43	1.52	5.32	1.54	5.27	1.55	5.22	1.56	5.13	1.57	5.05	1.59
							7	6.09	1.55	5.96	1.57	5.84	1.59	5.80	1.60	5.73	1.61	5.64	1.63	5.56	1.64
							10	6.62	1.60	6.48	1.62	6.36	1.65	6.30	1.66	6.25	1.67	6.15	1.68	6.06	1.70
							15	7.28	1.66	7.14	1.69	7.01	1.71	6.95	1.72	6.89	1.73	6.79	1.75	6.69	1.77
2500	5000				7500	144%	-15	3.61	1.38	3.49	1.40	3.39	1.42	3.35	1.43	3.31	1.44	3.23	1.45	3.17	1.46
							-10	4.32	1.46	4.20	1.48	4.09	1.50	4.04	1.51	4.00	1.51	3.92	1.53	3.85	1.54
							-5	5.03	1.53	4.91	1.55	4.79	1.57	4.74	1.58	4.69	1.59	4.61	1.61	4.53	1.62
							0	5.75	1.60	5.62	1.62	5.50	1.64	5.44	1.65	5.39	1.66	5.30	1.68	5.21	1.70
							2	6.04	1.63	5.90	1.65	5.78	1.67	5.72	1.68	5.67	1.69	5.57	1.71	5.49	1.73
							7	6.61	1.68	6.47	1.71	6.34	1.73	6.30	1.74	6.23	1.75	6.12	1.77	6.03	1.79
							10	7.19	1.74	7.04	1.77	6.91	1.79	6.84	1.80	6.79	1.81	6.68	1.83	6.58	1.85
							15	7.91	1.81	7.75	1.84	7.61	1.86	7.55	1.87	7.49	1.88	7.37	1.91	7.27	1.92
3500	3500				7000	135%	-15	3.38	1.30	3.27	1.32	3.18	1.33	3.14	1.34	3.10	1.35	3.03	1.36	2.97	1.37
							-10	4.05	1.36	3.93	1.38	3.83	1.40	3.79	1.41	3.75	1.42	3.67	1.43	3.60	1.44
							-5	4.72	1.43	4.60	1.45	4.49	1.47	4.44	1.48	4.40	1.49	4.31	1.50	4.24	1.52
							0	5.39	1.50	5.26	1.52	5.15	1.54	5.10	1.55	5.05	1.56	4.96	1.57	4.88	1.59
							2	5.65	1.52	5.53	1.55	5.41	1.57	5.36	1.58	5.31	1.59	5.22	1.60	5.14	1.62
							7	6.19	1.58	6.06	1.60	5.94	1.62	5.90	1.63	5.83	1.64	5.74	1.66	5.65	1.67
							10	6.73	1.63	6.59	1.65	6.47	1.68	6.41	1.69	6.35	1.70	6.25	1.72	6.16	1.73
							15	7.40	1.70	7.26	1.72	7.13	1.74	7.07	1.75	7.01	1.77	6.90	1.78	6.81	1.80
2000	2000	2000			6000	115%	-15	3.32	1.26	3.22	1.28	3.12	1.30	3.08	1.31	3.04	1.31	2.97	1.33	2.92	1.34
							-10	3.98	1.33	3.87	1.35	3.77	1.37	3.72	1.38	3.68	1.38	3.61	1.40	3.54	1.41
							-5	4.64	1.40	4.52	1.42	4.41	1.44	4.37	1.44	4.32	1.45	4.24	1.47	4.17	1.48
							0	5.29	1.46	5.17	1.48	5.06	1.50	5.01	1.51	4.96	1.52	4.88	1.54	4.80	1.55
							2	5.56	1.49	5.43	1.51	5.32	1.53	5.27	1.54	5.22	1.55	5.13	1.56	5.05	1.58
							7	6.09	1.54	5.96	1.56	5.84	1.58	5.80	1.59	5.73	1.60	5.64	1.62	5.56	1.63
							10	6.62	1.59	6.48	1.61	6.36	1.64	6.30	1.65	6.25	1.66	6.15	1.67	6.06	1.69
							15	7.28	1.65	7.14	1.68	7.01	1.70	6.95	1.71	6.89	1.72	6.79	1.74	6.69	1.76
2000	2000	2500			6500	125%	-15	3.38	1.31	3.27	1.33	3.18	1.35	3.14	1.36	3.10	1.36	3.03	1.38	2.97	1.39
							-10	4.05	1.38	3.93	1.40	3.83	1.42	3.79	1.43	3.75	1.44	3.67	1.45	3.60	1.46
							-5	4.72	1.45	4.60	1.47	4.49	1.49	4.44	1.50	4.40	1.51	4.31	1.52	4.24	1.54
							0	5.39	1.52	5.26	1.54	5.15	1.56	5.10	1.57	5.05	1.58	4.96	1.59	4.88	1.61
							2	5.65	1.54	5.53	1.57	5.41	1.59	5.36	1.60	5.31	1.61	5.22	1.62	5.14	1.64
							7	6.19	1.60	6.06	1.62	5.94	1.64	5.90	1.65	5.83	1.66	5.74	1.68	5.65	1.70
							10	6.73	1.65	6.59	1.67	6.47	1.70	6.41	1.71	6.35	1.72	6.25	1.74	6.16	1.75
							15	7.40	1.72	7.26	1.74	7.13	1.77	7.07	1.78	7.01	1.79	6.90	1.81	6.81	1.82
2000	2000	3500			7500	144%	-15	3.61	1.32	3.49	1.34	3.39	1.36	3.35	1.36	3.31	1.37	3.23	1.39	3.17	1.40
							-10	4.32	1.39	4.20	1.41	4.09	1.43	4.04	1.44	4.00	1.44	3.92	1.46	3.85	1.47
							-5	5.03	1.46	4.91	1.48	4.79	1.50	4.74	1.51	4.69	1.52	4.61	1.53	4.53	1.54
							0	5.75	1.53	5.62	1.55	5.50	1.57	5.44	1.58	5.39	1.59	5.30	1.60	5.21	1.62
							2	6.04	1.55	5.90	1.58	5.78	1.60	5.72	1.61	5.67	1.62	5.57	1.63	5.49	1.65
							7	6.61	1.61	6.47	1.63	6.34	1.65	6.30	1.66	6.23	1.67	6.12	1.69	6.03	1.71
							10	7.19	1.66	7.04	1.68	6.91	1.71	6.84	1.72	6.79	1.73	6.68	1.75	6.58	1.76
							15	7.91	1.73	7.75	1.75	7.61	1.78	7.55	1.79	7.49	1.80	7.37	1.82	7.27	1.84

* All figures comply with EN14511

1. Cooling capacity is based on 27°CDB / 19°CWB (indoor temperature), 35°CDB (outdoor temperature).
2. Heating capacity is based on 20°CDB (indoor temperature), 7°CDB/6°CWB (outdoor temperature).
3. Capacities are based on the following conditions : - Corresponding refrigerant piping length : 5m / - Level difference : 0m
4. The total ability of connected a indoor unit is up to 8.0kW
5. It is impossible to connect the indoor unit for one room only.
6. This data is reference data for temperature capacity trend.

3 AJ052FCJ3EH

2) Heating

	Combination (Capacity Index)					Combination (Total)	Combination (%)	Outdoor Temperature (°C, DB)	Indoor Temperature(°C, WB)													
									14		16		18		20		21		22		24	
									TC(kW)	PI(kW)	TC(kW)	PI(kW)	TC(kW)	PI(kW)	TC(kW)	PI(kW)	TC(kW)	PI(kW)	TC(kW)	PI(kW)	TC(kW)	PI(kW)
HEATING	2000	2500	2500			7000	135%	-15	3.43	1.26	3.33	1.28	3.23	1.30	3.19	1.31	3.15	1.31	3.08	1.33	3.02	1.34
								-10	4.11	1.33	4.00	1.35	3.90	1.37	3.85	1.38	3.81	1.38	3.73	1.40	3.67	1.41
								-5	4.80	1.40	4.67	1.42	4.57	1.44	4.52	1.44	4.47	1.45	4.39	1.47	4.31	1.48
								0	5.48	1.46	5.35	1.48	5.24	1.50	5.18	1.51	5.13	1.52	5.04	1.54	4.97	1.55
								2	5.75	1.49	5.62	1.51	5.50	1.53	5.45	1.54	5.40	1.55	5.31	1.56	5.23	1.58
								7	6.30	1.54	6.16	1.56	6.04	1.58	6.00	1.59	5.93	1.60	5.83	1.62	5.75	1.63
								10	6.84	1.59	6.70	1.61	6.58	1.64	6.52	1.65	6.46	1.66	6.36	1.67	6.27	1.69
								15	7.53	1.65	7.38	1.68	7.25	1.70	7.19	1.71	7.13	1.72	7.02	1.74	6.92	1.76
	2000	2500	3500			8000	154%	-15	3.61	1.30	3.49	1.32	3.39	1.33	3.35	1.34	3.31	1.35	3.23	1.36	3.17	1.37
								-10	4.32	1.36	4.20	1.38	4.09	1.40	4.04	1.41	4.00	1.42	3.92	1.43	3.85	1.44
								-5	5.03	1.43	4.91	1.45	4.79	1.47	4.74	1.48	4.69	1.49	4.61	1.50	4.53	1.52
								0	5.75	1.50	5.62	1.52	5.50	1.54	5.44	1.55	5.39	1.56	5.30	1.57	5.21	1.59
								2	6.04	1.52	5.90	1.55	5.78	1.57	5.72	1.58	5.67	1.59	5.57	1.60	5.49	1.62
								7	6.61	1.58	6.47	1.60	6.34	1.62	6.30	1.63	6.23	1.64	6.12	1.66	6.03	1.67
								10	7.19	1.63	7.04	1.65	6.91	1.68	6.84	1.69	6.79	1.70	6.68	1.72	6.58	1.73
								15	7.91	1.70	7.75	1.72	7.61	1.74	7.55	1.75	7.49	1.77	7.37	1.78	7.27	1.80
	2500	2500	2500			7500	144%	-15	3.61	1.11	3.49	1.13	3.39	1.14	3.35	1.15	3.31	1.16	3.23	1.17	3.17	1.18
								-10	4.32	1.17	4.20	1.19	4.09	1.20	4.04	1.21	4.00	1.22	3.92	1.23	3.85	1.24
								-5	5.03	1.23	4.91	1.25	4.79	1.26	4.74	1.27	4.69	1.28	4.61	1.29	4.53	1.30
								0	5.75	1.29	5.62	1.31	5.50	1.32	5.44	1.33	5.39	1.34	5.30	1.35	5.21	1.36
								2	6.04	1.31	5.90	1.33	5.78	1.35	5.72	1.35	5.67	1.36	5.57	1.38	5.49	1.39
								7	6.61	1.35	6.47	1.37	6.34	1.39	6.30	1.40	6.23	1.41	6.12	1.43	6.03	1.44
								10	7.19	1.40	7.04	1.42	6.91	1.44	6.84	1.45	6.79	1.46	6.68	1.47	6.58	1.49
								15	7.91	1.46	7.75	1.48	7.61	1.50	7.55	1.51	7.49	1.52	7.37	1.53	7.27	1.55
	2500	2500	3500			8500	163%	-15	3.61	1.11	3.49	1.13	3.39	1.14	3.35	1.15	3.31	1.16	3.23	1.17	3.17	1.18
								-10	4.32	1.17	4.20	1.19	4.09	1.20	4.04	1.21	4.00	1.22	3.92	1.23	3.85	1.24
								-5	5.03	1.23	4.91	1.25	4.79	1.26	4.74	1.27	4.69	1.28	4.61	1.29	4.53	1.30
								0	5.75	1.29	5.62	1.31	5.50	1.32	5.44	1.33	5.39	1.34	5.30	1.35	5.21	1.36
								2	6.04	1.31	5.90	1.33	5.78	1.35	5.72	1.35	5.67	1.36	5.57	1.38	5.49	1.39
								7	6.61	1.35	6.47	1.37	6.34	1.39	6.30	1.40	6.23	1.41	6.12	1.43	6.03	1.44
								10	7.19	1.40	7.04	1.42	6.91	1.44	6.84	1.45	6.79	1.46	6.68	1.47	6.58	1.49
								15	7.91	1.46	7.75	1.48	7.61	1.50	7.55	1.51	7.49	1.52	7.37	1.53	7.27	1.55

* All figures comply with EN14511

1. Cooling capacity is based on 27°CDB / 19°CWB (indoor temperature), 35°CDB (outdoor temperature).
2. Heating capacity is based on 20°CDB (indoor temperature), 7°CDB/6°CWB (outdoor temperature).
3. Capacities are based on the following conditions : - Corresponding refrigerant piping length : 5m / - Level difference : 0m
4. The total ability of connected a indoor unit is up to 8.0kW
5. It is impossible to connect the indoor unit for one room only.
6. This data is reference data for temperature capacity trend.

4 AJ068FCJ3EH

1) Cooling

COOLING

Combination (Capacity Index)	Combination (Total)	Combination (%)	Outdoor Temperature (°C, DB)	Indoor Temperature(°C, WB)													
				14		16		18		19		20		22		24	
				TC(kW)	PI(kW)	TC(kW)	PI(kW)	TC(kW)	PI(kW)	TC(kW)	PI(kW)	TC(kW)	PI(kW)	TC(kW)	PI(kW)	TC(kW)	PI(kW)
2000	2000	29%	10	1.60	0.36	2.32	0.41	2.42	0.44	2.46	0.46	2.51	0.47	2.61	0.49	2.71	0.51
			12	1.60	0.38	2.28	0.42	2.38	0.45	2.43	0.47	2.48	0.48	2.57	0.50	2.67	0.52
			14	1.60	0.40	2.24	0.44	2.34	0.47	2.39	0.48	2.44	0.50	2.53	0.52	2.63	0.53
			16	1.60	0.41	2.21	0.45	2.30	0.48	2.35	0.50	2.40	0.51	2.50	0.53	2.59	0.54
			18	1.60	0.43	2.17	0.47	2.27	0.50	2.31	0.51	2.36	0.52	2.46	0.54	2.55	0.55
			20	1.60	0.45	2.13	0.48	2.23	0.51	2.28	0.52	2.32	0.53	2.42	0.55	2.52	0.56
			21	1.60	0.46	2.12	0.49	2.21	0.52	2.26	0.53	2.30	0.54	2.40	0.56	2.50	0.57
			23	1.60	0.48	2.08	0.51	2.17	0.53	2.22	0.55	2.27	0.56	2.36	0.57	2.46	0.58
			25	1.60	0.49	2.04	0.53	2.14	0.55	2.18	0.56	2.23	0.57	2.32	0.58	2.42	0.59
			27	1.60	0.51	2.01	0.54	2.10	0.57	2.15	0.58	2.19	0.58	2.29	0.60	2.38	0.60
			29	1.60	0.53	1.97	0.56	2.06	0.58	2.11	0.59	2.16	0.60	2.25	0.61	2.34	0.61
			31	1.60	0.55	1.94	0.58	2.03	0.60	2.07	0.61	2.12	0.61	2.21	0.62	2.30	0.62
			33	1.60	0.57	1.90	0.60	1.99	0.61	2.04	0.62	2.08	0.63	2.17	0.64	2.27	0.64
			35	1.60	0.59	1.86	0.61	1.95	0.63	2.00	0.63	2.04	0.64	2.14	0.65	2.23	0.65
			37	1.60	0.61	1.83	0.63	1.92	0.65	1.96	0.65	2.01	0.66	2.10	0.66	2.19	0.66
			39	1.60	0.63	1.79	0.65	1.88	0.67	1.93	0.67	1.97	0.68	2.06	0.68	2.15	0.68
			42	1.58	0.66	1.74	0.68	1.83	0.69	1.87	0.70	1.92	0.70	2.01	0.70	2.10	0.70
			44	1.50	0.68	1.71	0.70	1.79	0.71	1.84	0.71	1.88	0.72	1.97	0.72	2.06	0.71
			46	1.46	0.70	1.67	0.72	1.76	0.73	1.80	0.73	1.84	0.73	1.93	0.73	2.02	0.72
2500	2500	37%	10	2.00	0.46	2.90	0.51	3.02	0.55	3.08	0.57	3.14	0.59	3.26	0.62	3.39	0.64
			12	2.00	0.48	2.85	0.53	2.97	0.57	3.03	0.59	3.09	0.60	3.22	0.63	3.34	0.65
			14	2.00	0.50	2.80	0.55	2.93	0.59	2.99	0.61	3.05	0.62	3.17	0.65	3.29	0.66
			16	2.00	0.52	2.76	0.57	2.88	0.61	2.94	0.62	3.00	0.64	3.12	0.66	3.24	0.68
			18	2.00	0.54	2.71	0.59	2.83	0.62	2.89	0.64	2.95	0.65	3.07	0.68	3.19	0.69
			20	2.00	0.56	2.67	0.61	2.79	0.64	2.85	0.66	2.90	0.67	3.02	0.69	3.14	0.70
			21	2.00	0.58	2.64	0.62	2.76	0.65	2.82	0.67	2.88	0.68	3.00	0.70	3.12	0.71
			23	2.00	0.60	2.60	0.64	2.72	0.67	2.78	0.68	2.83	0.70	2.95	0.71	3.07	0.72
			25	2.00	0.62	2.55	0.66	2.67	0.69	2.73	0.70	2.79	0.71	2.91	0.73	3.02	0.74
			27	2.00	0.64	2.51	0.68	2.62	0.71	2.68	0.72	2.74	0.73	2.86	0.75	2.98	0.75
			29	2.00	0.67	2.46	0.70	2.58	0.73	2.64	0.74	2.69	0.75	2.81	0.76	2.93	0.77
			31	2.00	0.69	2.42	0.72	2.53	0.75	2.59	0.76	2.65	0.77	2.76	0.78	2.88	0.78
			33	2.00	0.71	2.37	0.75	2.49	0.77	2.54	0.78	2.60	0.79	2.72	0.80	2.83	0.80
			35	2.00	0.74	2.33	0.77	2.44	0.79	2.50	0.79	2.56	0.81	2.67	0.81	2.78	0.82
			37	2.00	0.76	2.29	0.79	2.40	0.81	2.45	0.82	2.51	0.83	2.62	0.83	2.74	0.83
			39	2.00	0.79	2.24	0.82	2.35	0.84	2.41	0.84	2.46	0.85	2.58	0.85	2.69	0.85
			42	1.98	0.83	2.18	0.85	2.29	0.87	2.34	0.87	2.40	0.88	2.51	0.88	2.62	0.87
			44	1.88	0.85	2.13	0.88	2.24	0.89	2.30	0.90	2.35	0.90	2.46	0.90	2.57	0.89
			46	1.83	0.88	2.09	0.90	2.20	0.91	2.25	0.92	2.30	0.92	2.41	0.92	2.53	0.91
3500	3500	51%	10	2.80	0.62	4.06	0.69	4.23	0.75	4.31	0.77	4.40	0.80	4.57	0.84	4.74	0.87
			12	2.80	0.65	3.99	0.71	4.16	0.77	4.25	0.80	4.33	0.82	4.50	0.86	4.68	0.88
			14	2.80	0.68	3.93	0.74	4.10	0.80	4.18	0.82	4.26	0.84	4.44	0.88	4.61	0.90
			16	2.80	0.70	3.86	0.77	4.03	0.82	4.11	0.84	4.20	0.86	4.37	0.90	4.54	0.92
			18	2.80	0.73	3.80	0.79	3.96	0.84	4.05	0.87	4.13	0.89	4.30	0.92	4.47	0.94
			20	2.80	0.76	3.73	0.82	3.90	0.87	3.98	0.89	4.07	0.91	4.23	0.94	4.40	0.95
			21	2.80	0.78	3.70	0.84	3.87	0.88	3.95	0.90	4.03	0.92	4.20	0.95	4.37	0.96
			23	2.80	0.81	3.64	0.86	3.80	0.91	3.89	0.93	3.97	0.94	4.13	0.97	4.30	0.98
			25	2.80	0.84	3.58	0.89	3.74	0.93	3.82	0.95	3.90	0.97	4.07	0.99	4.23	1.00
			27	2.80	0.87	3.51	0.92	3.67	0.96	3.76	0.98	3.84	0.99	4.00	1.01	4.17	1.02
			29	2.80	0.90	3.45	0.95	3.61	0.99	3.69	1.00	3.77	1.02	3.93	1.03	4.10	1.04
			31	2.80	0.94	3.39	0.98	3.55	1.02	3.63	1.03	3.71	1.04	3.87	1.06	4.03	1.06
			33	2.80	0.97	3.32	1.01	3.48	1.04	3.56	1.06	3.64	1.07	3.80	1.08	3.97	1.08
			35	2.80	1.00	3.26	1.04	3.42	1.07	3.50	1.07	3.58	1.09	3.74	1.10	3.90	1.10
			37	2.80	1.03	3.20	1.07	3.36	1.10	3.43	1.11	3.51	1.12	3.67	1.13	3.83	1.13
			39	2.80	1.07	3.14	1.11	3.29	1.13	3.37	1.14	3.45	1.15	3.61	1.15	3.77	1.15
			42	2.77	1.12	3.05	1.15	3.20	1.18	3.28	1.18	3.35	1.19	3.51	1.19	3.67	1.18
			44	2.63	1.16	2.98	1.19	3.14	1.21	3.21	1.21	3.29	1.22	3.45	1.22	3.60	1.21
			46	2.56	1.19	2.92	1.22	3.07	1.24	3.15	1.24	3.23	1.25	3.38	1.24	3.54	1.23
5000	5000	74%	10	4.00	0.94	5.79	1.04	6.04	1.13	6.16	1.17	6.28	1.21	6.53	1.27	6.78	1.31
			12	4.00	0.98	5.70	1.08	5.94	1.17	6.07	1.21	6.19	1.24	6.43	1.30	6.68	1.34
			14	4.00	1.02	5.61	1.12	5.85	1.21	5.97	1.24	6.09	1.27	6.34	1.33	6.58	1.36
			16	4.00	1.07	5.52	1.16	5.76	1.24	5.88	1.28	6.00	1.31	6.24	1.36	6.48	1.39
			18	4.00	1.11	5.43	1.20	5.66	1.28	5.78	1.31	5.90	1.34	6.14	1.39	6.39	1.42
			20	4.00	1.16	5.34	1.24	5.57	1.32	5.69	1.35	5.81	1.37	6.05	1.42	6.29	1.44
			21	4.00	1.18	5.29	1.27	5.53	1.34	5.64	1.37	5.76	1.39	6.00	1.43	6.24	1.46
			23	4.00	1.23	5.20	1.31	5.43	1.38	5.55	1.40	5.67	1.43	5.91	1.46	6.14	1.49
			25	4.00	1.27	5.11	1.35	5.34	1.42	5.46	1.44	5.57	1.46	5.81	1.50	6.05	1.52
			27	4.00	1.32	5.02	1.40	5.25	1.46	5.37	1.48	5.48	1.50	5.72	1.53	5.95	1.55
			29	4.00	1.37	4.93	1.44	5.16	1.50	5.27	1.52	5.39	1.54	5.62	1.56	5.86	1.58
			31	4.00	1.42	4.84	1.49	5.07	1.54	5.18	1.56	5.30	1.58	5.53	1.60	5.76	1.61
			33	4.00	1.47	4.75	1.53	4.98	1.58	5.09	1.60	5.20	1.62	5.43	1.64	5.66	1.64
			35	4.00	1.52	4.66	1.58	4.89	1.62	5.00	1.62	5.11	1.66	5.34	1.67	5.57	1.67
			37	4.00	1.57	4.57	1.63	4.79	1.67	4.91	1.68	5.02	1.70	5.25	1.71	5.47	1.70
			39	4.00	1.62	4.48	1.67	4.70	1.71	4.82	1.73	4.93	1.74	5.15	1.75	5.38	1.74
			42	3.95	1.70	4.35	1.75	4.57	1.78	4.68	1.79	4.79	1.80	5.01	1.80	5.24	1.79
			44	3.75	1.75	4.26	1.80	4.48	1.83	4.59	1.84	4.70	1.84	4.92	1.84	5.14	1.83
			46	3.65	1.80	4.18	1.85	4.39	1.87	4.50	1.88	4.61	1.89	4.83	1.88	5.05	1.86

* All figures comply with EN14511

1. Cooling capacity is based on 27°CDB / 19°CWB (indoor temperature), 35°CDB (outdoor temperature).
2. Heating capacity is based on 20°CDB (indoor temperature), 7°CDB/6°CWB (outdoor temperature).
3. Capacities are based on the following conditions : - Corresponding refrigerant piping length : 5m / - Level difference : 0m
4. The total ability of connected a indoor unit is up to 11kW
5. It is impossible to connect the indoor unit for one room only.
6. This data is reference data for temperature capacity trend.

4 AJ068FCJ3EH

1) Cooling

COOLING

Combination (Capacity Index)					Combination (Total)	Combination (%)	Outdoor Temperature (°C, DB)	Indoor Temperature(°C, WB)													
								14		16		18		19		20		22		24	
								TC(kW)	PI(kW)	TC(kW)	PI(kW)	TC(kW)	PI(kW)	TC(kW)	PI(kW)	TC(kW)	PI(kW)	TC(kW)	PI(kW)	TC(kW)	PI(kW)
2000	2000				4000	59%	10	3.53	0.87	4.99	0.89	5.08	0.91	5.14	0.92	5.20	0.94	5.35	0.95	5.52	0.97
							12	3.53	0.89	4.85	0.91	4.95	0.94	5.01	0.95	5.08	0.96	5.23	0.98	5.41	1.00
							14	3.53	0.92	4.72	0.94	4.83	0.96	4.89	0.97	4.96	0.98	5.12	1.00	5.31	1.02
							16	3.53	0.94	4.60	0.96	4.71	0.98	4.78	0.99	4.85	1.00	5.02	1.02	5.21	1.04
							18	3.53	0.96	4.48	0.98	4.60	1.01	4.67	1.02	4.75	1.03	4.92	1.04	5.12	1.06
							20	3.53	0.99	4.36	1.01	4.49	1.03	4.57	1.04	4.65	1.05	4.83	1.07	5.03	1.09
							21	3.53	1.00	4.31	1.02	4.44	1.04	4.52	1.05	4.60	1.06	4.78	1.08	4.99	1.10
							23	3.53	1.03	4.20	1.05	4.34	1.07	4.42	1.08	4.51	1.09	4.70	1.11	4.91	1.13
							25	3.53	1.05	4.10	1.07	4.25	1.09	4.33	1.10	4.42	1.11	4.62	1.13	4.84	1.15
							27	3.53	1.08	4.01	1.10	4.16	1.12	4.25	1.13	4.34	1.14	4.55	1.16	4.78	1.18
							29	3.53	1.11	3.92	1.13	4.08	1.15	4.17	1.16	4.27	1.17	4.48	1.19	4.72	1.20
							31	3.53	1.13	3.84	1.15	4.01	1.18	4.10	1.19	4.20	1.19	4.42	1.21	4.66	1.23
							33	3.53	1.16	3.76	1.18	3.94	1.20	4.03	1.21	4.13	1.22	4.36	1.24	4.61	1.26
							35	3.53	1.19	3.69	1.21	3.87	1.23	4.00	1.24	4.08	1.25	4.31	1.27	4.57	1.29
							37	3.53	1.22	3.62	1.24	3.81	1.26	3.91	1.27	4.02	1.28	4.26	1.30	4.53	1.32
							39	3.53	1.25	3.56	1.27	3.76	1.29	3.86	1.30	3.98	1.31	4.22	1.33	4.49	1.35
							42	3.53	1.30	3.48	1.32	3.69	1.34	3.80	1.35	3.92	1.36	4.17	1.38	4.46	1.40
							44	3.53	1.33	3.44	1.35	3.65	1.37	3.76	1.38	3.89	1.39	4.15	1.41	4.44	1.43
							46	3.53	1.37	3.39	1.39	3.61	1.41	3.73	1.42	3.86	1.43	4.13	1.44	4.42	1.46
2000	2500				4500	66%	10	3.98	0.99	5.61	1.02	5.72	1.04	5.78	1.05	5.85	1.06	6.01	1.09	6.21	1.11
							12	3.98	1.02	5.46	1.04	5.57	1.06	5.64	1.08	5.71	1.09	5.89	1.11	6.09	1.13
							14	3.98	1.04	5.31	1.07	5.43	1.09	5.50	1.10	5.58	1.11	5.76	1.14	5.97	1.16
							16	3.98	1.07	5.17	1.09	5.30	1.12	5.38	1.13	5.46	1.14	5.65	1.16	5.86	1.18
							18	3.98	1.09	5.04	1.12	5.17	1.14	5.25	1.15	5.34	1.17	5.53	1.19	5.76	1.21
							20	3.98	1.12	4.91	1.15	5.05	1.17	5.14	1.18	5.23	1.19	5.43	1.22	5.66	1.24
							21	3.98	1.14	4.85	1.16	5.00	1.18	5.08	1.20	5.17	1.21	5.38	1.23	5.62	1.25
							23	3.98	1.17	4.73	1.19	4.89	1.21	4.98	1.23	5.07	1.24	5.29	1.26	5.53	1.28
							25	3.98	1.20	4.62	1.22	4.78	1.24	4.87	1.25	4.98	1.27	5.20	1.29	5.45	1.31
							27	3.98	1.23	4.51	1.25	4.68	1.27	4.78	1.28	4.88	1.30	5.11	1.32	5.37	1.34
							29	3.98	1.26	4.41	1.28	4.59	1.30	4.69	1.32	4.80	1.33	5.04	1.35	5.30	1.37
							31	3.98	1.29	4.32	1.31	4.51	1.34	4.61	1.35	4.72	1.36	4.97	1.38	5.24	1.40
							33	3.98	1.32	4.23	1.35	4.43	1.37	4.54	1.38	4.65	1.39	4.90	1.41	5.19	1.43
							35	3.98	1.36	4.15	1.38	4.35	1.40	4.50	1.41	4.59	1.42	4.85	1.45	5.14	1.47
							37	3.98	1.39	4.08	1.41	4.29	1.44	4.40	1.45	4.53	1.46	4.80	1.48	5.09	1.50
							39	3.98	1.42	4.01	1.45	4.23	1.47	4.35	1.48	4.48	1.49	4.75	1.51	5.06	1.53
							42	3.98	1.48	3.92	1.50	4.15	1.52	4.27	1.54	4.41	1.55	4.70	1.57	5.01	1.59
							44	3.98	1.52	3.87	1.54	4.10	1.56	4.23	1.57	4.37	1.58	4.67	1.60	4.99	1.62
							46	3.98	1.55	3.82	1.58	4.07	1.60	4.20	1.61	4.34	1.62	4.64	1.64	4.98	1.66
2000	3500				5500	81%	10	4.86	1.29	6.86	1.32	6.99	1.35	7.06	1.36	7.15	1.38	7.35	1.41	7.59	1.44
							12	4.86	1.32	6.67	1.35	6.81	1.38	6.89	1.40	6.98	1.41	7.19	1.44	7.44	1.47
							14	4.86	1.35	6.49	1.38	6.64	1.41	6.73	1.43	6.82	1.44	7.04	1.47	7.30	1.50
							16	4.86	1.39	6.32	1.42	6.48	1.45	6.57	1.46	6.67	1.48	6.90	1.51	7.16	1.54
							18	4.86	1.42	6.16	1.45	6.32	1.48	6.42	1.50	6.53	1.51	6.76	1.54	7.04	1.57
							20	4.86	1.46	6.00	1.49	6.18	1.52	6.28	1.53	6.39	1.55	6.64	1.58	6.92	1.61
							21	4.86	1.48	5.92	1.51	6.11	1.54	6.21	1.55	6.32	1.57	6.58	1.60	6.86	1.62
							23	4.86	1.51	5.78	1.54	5.97	1.58	6.08	1.59	6.20	1.60	6.46	1.63	6.76	1.66
							25	4.86	1.55	5.64	1.58	5.84	1.61	5.96	1.63	6.08	1.64	6.35	1.67	6.66	1.70
							27	4.86	1.59	5.51	1.62	5.72	1.65	5.84	1.67	5.97	1.68	6.25	1.71	6.57	1.74
							29	4.86	1.63	5.39	1.66	5.61	1.69	5.74	1.71	5.87	1.72	6.16	1.75	6.48	1.78
							31	4.86	1.67	5.28	1.70	5.51	1.73	5.64	1.75	5.77	1.76	6.07	1.79	6.41	1.82
							33	4.86	1.72	5.17	1.75	5.41	1.78	5.54	1.79	5.69	1.81	5.99	1.83	6.34	1.86
							35	4.86	1.76	5.07	1.79	5.32	1.82	5.50	1.83	5.61	1.85	5.92	1.88	6.28	1.90
							37	4.86	1.80	4.98	1.83	5.24	1.86	5.38	1.88	5.53	1.89	5.86	1.92	6.23	1.95
							39	4.86	1.85	4.90	1.88	5.17	1.91	5.31	1.92	5.47	1.94	5.81	1.97	6.18	1.99
							42	4.86	1.92	4.79	1.95	5.07	1.98	5.22	1.99	5.39	2.01	5.74	2.03	6.13	2.06
							44	4.86	1.97	4.72	2.00	5.02	2.03	5.17	2.04	5.34	2.05	5.70	2.08	6.10	2.11
							46	4.86	2.02	4.67	2.05	4.97	2.08	5.13	2.09	5.30	2.10	5.68	2.13	6.08	2.16
2000	5000				7000	103%	10	5.74	1.41	8.10	1.44	8.26	1.47	8.35	1.49	8.45	1.51	8.69	1.54	8.97	1.57
							12	5.74	1.44	7.88	1.48	8.05	1.51	8.15	1.53	8.25	1.54	8.50	1.57	8.79	1.61
							14	5.74	1.48	7.67	1.51	7.85	1.55	7.95	1.56	8.06	1.58	8.32	1.61	8.62	1.64
							16	5.74	1.51	7.47	1.55	7.66	1.58	7.76	1.60	7.88	1.62	8.15	1.65	8.47	1.68
							18	5.74	1.55	7.28	1.59	7.47	1.62	7.59	1.64	7.71	1.65	7.99	1.69	8.32	1.72
							20	5.74	1.59	7.09	1.63	7.30	1.66	7.42	1.68	7.55	1.69	7.84	1.72	8.18	1.75
							21	5.74	1.61	7.00	1.65	7.22	1.68	7.34	1.70	7.47	1.71	7.77	1.74	8.11	1.77
							23	5.74	1.65	6.83	1.69	7.06	1.72	7.19	1.74	7.33	1.75	7.63	1.78	7.99	1.81
							25	5.74	1.70	6.67	1.73	6.91	1.76	7.04	1.78	7.19	1.80	7.51	1.83	7.87	1.86
							27	5.74	1.74	6.52	1.77	6.77	1.81	6.91	1.82	7.06	1.84	7.39	1.87	7.76	1.90
							29	5.74	1.78	6.37	1.82	6.63	1.85	6.78	1.87	6.93	1.88	7.28	1.91	7.66	1.94
							31	5.74	1.83	6.24	1.86	6.51	1.90	6.66	1.91	6.82	1.93	7.18	1.96	7.57	1.99
							33	5.74	1.87	6.11	1.91	6.40	1.94	6.55	1.96	6.72	1.97	7.08	2.00	7.49	2.03
							35	5.74	1.92	6.00	1.96	6.29	1.99	6.50	2.00	6.63	2.02	7.00	2.05	7.42	2.08
							37	5.74	1.97	5.89	2.00	6.19	2.04	6.36	2.05	6.54	2.07	6.93	2.10	7.36	2.13
							39	5.74	2.02	5.79	2.05	6.11	2.09	6.28	2.10	6.46	2.12	6.86	2.15	7.30	2.18
							42	5.74	2.10	5.66	2.13	5.99	2.16	6.17	2.18	6.37	2.19	6.78	2.22	7.24	2.25
							44	5.74	2.15	5.58	2.18	5.93	2.21	6.12	2.23	6.31	2.25	6.74	2.28	7.21	2.30
							46	5.74	2.20	5.52	2.24	5.87	2.27	6.07	2.28	6.27	2.30	6.71	2.33	7.19	2.36

* All figures comply with EN14511

1. Cooling capacity is based on 27°CDB / 19°CWB (indoor temperature), 35°CDB (outdoor temperature).
2. Heating capacity is based on 20°CDB (indoor temperature), 7°CDB/6°CWB (outdoor temperature).
3. Capacities are based on the following conditions : - Corresponding refrigerant piping length : 5m / - Level difference : 0m
4. The total ability of connected a indoor unit is up to 11kW
5. It is impossible to connect the indoor unit for one room only.
6. This data is reference data for temperature capacity trend.

1) Cooling

COOLING

Combination (Capacity Index)					Combination (Total)	Combination (%)	Outdoor Temperature (°C, DB)	Indoor Temperature(°C, WB)													
								14		16		18		19		20		22		24	
								TC(kW)	PI(kW)	TC(kW)	PI(kW)	TC(kW)	PI(kW)	TC(kW)	PI(kW)	TC(kW)	PI(kW)	TC(kW)	PI(kW)	TC(kW)	PI(kW)
2500	2500				5000	74%	10	4.42	1.17	6.23	1.20	6.35	1.22	6.42	1.24	6.50	1.25	6.68	1.28	6.90	1.30
							12	4.42	1.20	6.06	1.22	6.19	1.25	6.27	1.27	6.35	1.28	6.54	1.31	6.76	1.33
							14	4.42	1.23	5.90	1.25	6.04	1.28	6.12	1.30	6.20	1.31	6.40	1.34	6.63	1.36
							16	4.42	1.26	5.75	1.29	5.89	1.31	5.97	1.33	6.06	1.34	6.27	1.37	6.51	1.39
							18	4.42	1.29	5.60	1.32	5.75	1.35	5.84	1.36	5.93	1.37	6.15	1.40	6.40	1.42
							20	4.42	1.32	5.45	1.35	5.62	1.38	5.71	1.39	5.81	1.41	6.03	1.43	6.29	1.46
							21	4.42	1.34	5.39	1.37	5.55	1.39	5.65	1.41	5.75	1.42	5.98	1.45	6.24	1.47
							23	4.42	1.37	5.25	1.40	5.43	1.43	5.53	1.44	5.63	1.46	5.87	1.48	6.14	1.51
							25	4.42	1.41	5.13	1.44	5.31	1.46	5.42	1.48	5.53	1.49	5.77	1.52	6.05	1.54
							27	4.42	1.44	5.01	1.47	5.20	1.50	5.31	1.51	5.43	1.53	5.68	1.55	5.97	1.58
							29	4.42	1.48	4.90	1.51	5.10	1.54	5.21	1.55	5.33	1.56	5.60	1.59	5.89	1.61
							31	4.42	1.52	4.80	1.55	5.01	1.57	5.12	1.59	5.25	1.60	5.52	1.63	5.82	1.65
							33	4.42	1.56	4.70	1.58	4.92	1.61	5.04	1.62	5.17	1.64	5.45	1.66	5.76	1.69
							35	4.42	1.60	4.61	1.62	4.84	1.65	5.00	1.66	5.10	1.68	5.39	1.70	5.71	1.73
							37	4.42	1.64	4.53	1.66	4.76	1.69	4.89	1.70	5.03	1.72	5.33	1.74	5.66	1.77
							39	4.42	1.68	4.45	1.71	4.70	1.73	4.83	1.74	4.97	1.76	5.28	1.78	5.62	1.81
							42	4.42	1.74	4.35	1.77	4.61	1.80	4.75	1.81	4.90	1.82	5.22	1.85	5.57	1.87
							44	4.42	1.78	4.30	1.81	4.56	1.84	4.70	1.85	4.86	1.86	5.18	1.89	5.55	1.91
							46	4.42	1.83	4.24	1.86	4.52	1.88	4.67	1.90	4.82	1.91	5.16	1.93	5.53	1.96
2500	3500				6000	88%	10	5.30	1.39	7.48	1.43	7.62	1.46	7.71	1.48	7.80	1.49	8.02	1.52	8.28	1.56
							12	5.30	1.43	7.28	1.46	7.43	1.49	7.52	1.51	7.62	1.53	7.85	1.56	8.11	1.59
							14	5.30	1.46	7.08	1.50	7.24	1.53	7.34	1.55	7.44	1.56	7.68	1.59	7.96	1.62
							16	5.30	1.50	6.89	1.53	7.07	1.57	7.17	1.58	7.28	1.60	7.53	1.63	7.81	1.66
							18	5.30	1.54	6.72	1.57	6.90	1.61	7.00	1.62	7.12	1.64	7.38	1.67	7.68	1.70
							20	5.30	1.58	6.55	1.61	6.74	1.64	6.85	1.66	6.97	1.68	7.24	1.71	7.55	1.74
							21	5.30	1.60	6.46	1.63	6.66	1.66	6.78	1.68	6.90	1.70	7.17	1.73	7.49	1.76
							23	5.30	1.64	6.31	1.67	6.51	1.70	6.63	1.72	6.76	1.74	7.05	1.77	7.37	1.80
							25	5.30	1.68	6.16	1.71	6.38	1.75	6.50	1.76	6.63	1.78	6.93	1.81	7.26	1.84
							27	5.30	1.72	6.02	1.76	6.25	1.79	6.37	1.80	6.51	1.82	6.82	1.85	7.16	1.88
							29	5.30	1.77	5.88	1.80	6.12	1.83	6.26	1.85	6.40	1.86	6.72	1.89	7.07	1.92
							31	5.30	1.81	5.76	1.84	6.01	1.88	6.15	1.89	6.30	1.91	6.62	1.94	6.99	1.97
							33	5.30	1.86	5.64	1.89	5.90	1.92	6.05	1.94	6.20	1.95	6.54	1.98	6.92	2.01
							35	5.30	1.90	5.54	1.94	5.81	1.97	6.00	1.98	6.12	2.00	6.46	2.03	6.85	2.06
							37	5.30	1.95	5.44	1.98	5.72	2.02	5.87	2.03	6.04	2.05	6.39	2.08	6.79	2.11
							39	5.30	2.00	5.34	2.03	5.64	2.07	5.80	2.08	5.97	2.10	6.34	2.13	6.74	2.15
							42	5.30	2.08	5.22	2.11	5.53	2.14	5.70	2.16	5.88	2.17	6.26	2.20	6.68	2.23
							44	5.30	2.13	5.15	2.16	5.47	2.19	5.64	2.21	5.83	2.22	6.22	2.25	6.65	2.28
							46	5.30	2.18	5.09	2.21	5.42	2.25	5.60	2.26	5.79	2.28	6.19	2.30	6.63	2.33
2500	5000				7500	110%	10	6.01	1.47	8.48	1.51	8.64	1.54	8.73	1.56	8.84	1.58	9.09	1.61	9.38	1.64
							12	6.01	1.51	8.25	1.54	8.42	1.58	8.52	1.60	8.63	1.61	8.89	1.65	9.20	1.68
							14	6.01	1.54	8.03	1.58	8.21	1.62	8.32	1.63	8.44	1.65	8.71	1.68	9.02	1.72
							16	6.01	1.58	7.81	1.62	8.01	1.65	8.12	1.67	8.25	1.69	8.53	1.72	8.86	1.75
							18	6.01	1.62	7.61	1.66	7.82	1.69	7.94	1.71	8.07	1.73	8.36	1.76	8.70	1.79
							20	6.01	1.66	7.42	1.70	7.64	1.74	7.76	1.75	7.90	1.77	8.21	1.80	8.56	1.83
							21	6.01	1.68	7.33	1.72	7.55	1.76	7.68	1.77	7.82	1.79	8.13	1.82	8.49	1.85
							23	6.01	1.73	7.15	1.76	7.38	1.80	7.52	1.82	7.66	1.83	7.99	1.87	8.35	1.90
							25	6.01	1.77	6.98	1.81	7.23	1.84	7.37	1.86	7.52	1.88	7.85	1.91	8.23	1.94
							27	6.01	1.82	6.82	1.85	7.08	1.89	7.22	1.90	7.38	1.92	7.73	1.95	8.12	1.98
							29	6.01	1.86	6.67	1.90	6.94	1.93	7.09	1.95	7.25	1.97	7.61	2.00	8.02	2.03
							31	6.01	1.91	6.53	1.95	6.81	1.98	6.97	2.00	7.14	2.01	7.51	2.05	7.92	2.08
							33	6.01	1.96	6.40	1.99	6.69	2.03	6.85	2.05	7.03	2.06	7.41	2.09	7.84	2.12
							35	6.01	2.01	6.27	2.04	6.58	2.08	6.80	2.09	6.93	2.11	7.32	2.14	7.76	2.17
							37	6.01	2.06	6.16	2.09	6.48	2.13	6.66	2.15	6.84	2.16	7.25	2.19	7.70	2.22
							39	6.01	2.11	6.06	2.15	6.39	2.18	6.57	2.20	6.76	2.21	7.18	2.24	7.64	2.27
							42	6.01	2.19	5.92	2.23	6.27	2.26	6.46	2.28	6.66	2.29	7.10	2.32	7.57	2.35
							44	6.01	2.25	5.84	2.28	6.20	2.31	6.40	2.33	6.60	2.35	7.05	2.38	7.54	2.41
							46	6.01	2.30	5.77	2.34	6.14	2.37	6.35	2.39	6.56	2.40	7.02	2.43	7.52	2.46
3500	3500				7000	103%	10	5.74	1.41	8.10	1.45	8.26	1.48	8.35	1.50	8.45	1.52	8.69	1.55	8.97	1.58
							12	5.74	1.45	7.88	1.48	8.05	1.52	8.15	1.53	8.25	1.55	8.50	1.58	8.79	1.61
							14	5.74	1.48	7.67	1.52	7.85	1.55	7.95	1.57	8.06	1.59	8.32	1.62	8.62	1.65
							16	5.74	1.52	7.47	1.56	7.66	1.59	7.76	1.61	7.88	1.62	8.15	1.66	8.47	1.69
							18	5.74	1.56	7.28	1.60	7.47	1.63	7.59	1.65	7.71	1.66	7.99	1.69	8.32	1.72
							20	5.74	1.60	7.09	1.64	7.30	1.67	7.42	1.69	7.55	1.70	7.84	1.73	8.18	1.76
							21	5.74	1.62	7.00	1.66	7.22	1.69	7.34	1.71	7.47	1.72	7.77	1.75	8.11	1.78
							23	5.74	1.66	6.83	1.70	7.06	1.73	7.19	1.75	7.33	1.76	7.63	1.79	7.99	1.82
							25	5.74	1.70	6.67	1.74	6.91	1.77	7.04	1.79	7.19	1.80	7.51	1.84	7.87	1.87
							27	5.74	1.75	6.52	1.78	6.77	1.82	6.91	1.83	7.06	1.85	7.39	1.88	7.76	1.91
							29	5.74	1.79	6.37	1.83	6.63	1.86	6.78	1.88	6.93	1.89	7.28	1.92	7.66	1.95
							31	5.74	1.84	6.24	1.87	6.51	1.91	6.66	1.92	6.82	1.94	7.18	1.97	7.57	2.00
							33	5.74	1.88	6.11	1.92	6.40	1.95	6.55	1.97	6.72	1.98	7.08	2.01	7.49	2.04
							35	5.74	1.93	6.00	1.97	6.29	2.00	6.50	2.01	6.63	2.03	7.00	2.06	7.42	2.09
							37	5.74	1.98	5.89	2.01	6.19	2.05	6.36	2.06	6.54	2.08	6.93	2.11	7.36	2.14
							39	5.74	2.03	5.79	2.06	6.11	2.10	6.28	2.11	6.46	2.13	6.86	2.16	7.30	2.19
							42	5.74	2.11	5.66	2.14	5.99	2.17	6.17	2.19	6.37	2.20	6.78	2.23	7.24	2.26
							44	5.74	2.16	5.58	2.19	5.93	2.23	6.12	2.24	6.31	2.26	6.74	2.29	7.21	2.32
							46	5.74	2.21	5.52	2.25	5.87	2.28	6.07	2.29	6.27	2.31	6.71	2.34	7.19	2.37

* All figures comply with EN14511

1. Cooling capacity is based on 27°CDB / 19°CWB (indoor temperature), 35°CDB (outdoor temperature).
2. Heating capacity is based on 20°CDB (indoor temperature), 7°CDB/6°CWB (outdoor temperature).
3. Capacities are based on the following conditions : - Corresponding refrigerant piping length : 5m / - Level difference : 0m
4. The total ability of connected a indoor unit is up to 11kW
5. It is impossible to connect the indoor unit for one room only.
6. This data is reference data for temperature capacity trend.

4 AJ068FCJ3EH

1) Cooling

COOLING

Combination (Capacity Index)					Combination (Total)	Combination (%)	Outdoor Temperature (°C, DB)	Indoor Temperature(°C, WB)													
								14		16		18		19		20		22		24	
								TC(kW)	PI(kW)	TC(kW)	PI(kW)	TC(kW)	PI(kW)	TC(kW)	PI(kW)	TC(kW)	PI(kW)	TC(kW)	PI(kW)	TC(kW)	PI(kW)
3500	5000				8500	125%	10	6.01	1.48	8.48	1.51	8.64	1.55	8.73	1.57	8.84	1.58	9.09	1.62	9.38	1.65
							12	6.01	1.51	8.25	1.55	8.42	1.59	8.52	1.60	8.63	1.62	8.89	1.65	9.20	1.69
							14	6.01	1.55	8.03	1.59	8.21	1.62	8.32	1.64	8.44	1.66	8.71	1.69	9.02	1.72
							16	6.01	1.59	7.81	1.63	8.01	1.66	8.12	1.68	8.25	1.70	8.53	1.73	8.86	1.76
							18	6.01	1.63	7.61	1.67	7.82	1.70	7.94	1.72	8.07	1.74	8.36	1.77	8.70	1.80
							20	6.01	1.67	7.42	1.71	7.64	1.74	7.76	1.76	7.90	1.78	8.21	1.81	8.56	1.84
							21	6.01	1.69	7.33	1.73	7.55	1.76	7.68	1.78	7.82	1.80	8.13	1.83	8.49	1.86
							23	6.01	1.74	7.15	1.77	7.38	1.81	7.52	1.82	7.66	1.84	7.99	1.87	8.35	1.91
							25	6.01	1.78	6.98	1.82	7.23	1.85	7.37	1.87	7.52	1.89	7.85	1.92	8.23	1.95
							27	6.01	1.83	6.82	1.86	7.08	1.90	7.22	1.91	7.38	1.93	7.73	1.96	8.12	1.99
							29	6.01	1.87	6.67	1.91	6.94	1.94	7.09	1.96	7.25	1.98	7.61	2.01	8.02	2.04
							31	6.01	1.92	6.53	1.96	6.81	1.99	6.97	2.01	7.14	2.02	7.51	2.06	7.92	2.09
							33	6.01	1.97	6.40	2.00	6.69	2.04	6.85	2.06	7.03	2.07	7.41	2.10	7.84	2.13
							35	6.01	2.02	6.27	2.05	6.58	2.09	6.80	2.10	6.93	2.12	7.32	2.15	7.76	2.18
							37	6.01	2.07	6.16	2.10	6.48	2.14	6.66	2.16	6.84	2.17	7.25	2.20	7.70	2.23
							39	6.01	2.12	6.06	2.16	6.39	2.19	6.57	2.21	6.76	2.22	7.18	2.26	7.64	2.29
							42	6.01	2.20	5.92	2.24	6.27	2.27	6.46	2.29	6.66	2.30	7.10	2.33	7.57	2.36
							44	6.01	2.26	5.84	2.29	6.20	2.33	6.40	2.34	6.60	2.36	7.05	2.39	7.54	2.42
							46	6.01	2.31	5.77	2.35	6.14	2.38	6.35	2.40	6.56	2.41	7.02	2.44	7.52	2.47
5000	5000				10000	147%	10	7.65	1.45	7.95	1.48	8.25	1.51	8.41	1.52	8.56	1.54	8.87	1.57	9.19	1.60
							12	7.51	1.48	7.81	1.52	8.12	1.55	8.27	1.56	8.43	1.58	8.74	1.61	9.06	1.64
							14	7.38	1.52	7.68	1.55	7.99	1.59	8.14	1.60	8.30	1.62	8.61	1.65	8.93	1.68
							16	7.25	1.56	7.55	1.60	7.86	1.63	8.01	1.64	8.17	1.66	8.48	1.69	8.80	1.72
							18	7.12	1.60	7.42	1.64	7.73	1.67	7.88	1.68	8.04	1.70	8.35	1.73	8.68	1.76
							20	6.99	1.65	7.29	1.68	7.60	1.71	7.75	1.73	7.91	1.74	8.23	1.77	8.55	1.81
							21	6.92	1.67	7.22	1.70	7.53	1.73	7.69	1.75	7.84	1.76	8.16	1.79	8.48	1.83
							23	6.79	1.71	7.09	1.74	7.40	1.77	7.56	1.79	7.71	1.81	8.03	1.84	8.35	1.87
							25	6.66	1.75	6.96	1.79	7.27	1.82	7.43	1.83	7.59	1.85	7.90	1.88	8.23	1.92
							27	6.53	1.80	6.83	1.83	7.14	1.86	7.30	1.88	7.46	1.90	7.78	1.93	8.10	1.96
							29	6.40	1.84	6.70	1.87	7.01	1.91	7.17	1.92	7.33	1.94	7.65	1.97	7.97	2.01
							31	6.27	1.89	6.57	1.92	6.89	1.95	7.04	1.97	7.20	1.99	7.52	2.02	7.85	2.05
							33	6.14	1.93	6.45	1.97	6.76	2.00	6.92	2.02	7.07	2.03	7.39	2.07	7.72	2.10
							35	6.01	1.98	6.32	2.01	6.63	2.05	6.80	2.06	6.95	2.08	7.27	2.11	7.59	2.15
							37	5.88	2.03	6.19	2.06	6.50	2.10	6.66	2.11	6.82	2.13	7.14	2.16	7.47	2.20
							39	5.75	2.08	6.06	2.11	6.38	2.14	6.53	2.16	6.69	2.18	7.02	2.21	7.34	2.25
							42	5.56	2.15	5.87	2.19	6.19	2.22	6.34	2.24	6.50	2.25	6.83	2.29	7.15	2.32
							44	5.43	2.20	5.74	2.24	6.06	2.27	6.22	2.29	6.38	2.30	6.70	2.34	7.03	2.37
							46	5.31	2.25	5.62	2.29	5.93	2.32	6.09	2.34	6.25	2.36	6.58	2.39	6.91	2.42
2000	2000	2000			6000	88%	10	5.30	1.38	7.48	1.42	7.62	1.45	7.71	1.47	7.80	1.49	8.02	1.52	8.28	1.55
							12	5.30	1.42	7.28	1.45	7.43	1.49	7.52	1.50	7.62	1.52	7.85	1.55	8.11	1.58
							14	5.30	1.45	7.08	1.49	7.24	1.52	7.34	1.54	7.44	1.56	7.68	1.59	7.96	1.62
							16	5.30	1.49	6.89	1.53	7.07	1.56	7.17	1.58	7.28	1.59	7.53	1.62	7.81	1.65
							18	5.30	1.53	6.72	1.56	6.90	1.60	7.00	1.61	7.12	1.63	7.38	1.66	7.68	1.69
							20	5.30	1.57	6.55	1.60	6.74	1.64	6.85	1.65	6.97	1.67	7.24	1.70	7.55	1.73
							21	5.30	1.59	6.46	1.62	6.66	1.66	6.78	1.67	6.90	1.69	7.17	1.72	7.49	1.75
							23	5.30	1.63	6.31	1.66	6.51	1.70	6.63	1.71	6.76	1.73	7.05	1.76	7.37	1.79
							25	5.30	1.67	6.16	1.70	6.38	1.74	6.50	1.75	6.63	1.77	6.93	1.80	7.26	1.83
							27	5.30	1.71	6.02	1.75	6.25	1.78	6.37	1.80	6.51	1.81	6.82	1.84	7.16	1.87
							29	5.30	1.76	5.88	1.79	6.12	1.82	6.26	1.84	6.40	1.85	6.72	1.88	7.07	1.91
							31	5.30	1.80	5.76	1.83	6.01	1.87	6.15	1.88	6.30	1.90	6.62	1.93	6.99	1.96
							33	5.30	1.85	5.64	1.88	5.90	1.91	6.05	1.93	6.20	1.94	6.54	1.97	6.92	2.00
							35	5.30	1.89	5.54	1.93	5.81	1.96	6.00	1.97	6.12	1.99	6.46	2.02	6.85	2.05
							37	5.30	1.94	5.44	1.97	5.72	2.01	5.87	2.02	6.04	2.04	6.39	2.07	6.79	2.10
							39	5.30	1.99	5.34	2.02	5.64	2.06	5.80	2.07	5.97	2.09	6.34	2.12	6.74	2.14
							42	5.30	2.07	5.22	2.10	5.53	2.13	5.70	2.15	5.88	2.16	6.26	2.19	6.68	2.22
							44	5.30	2.12	5.15	2.15	5.47	2.18	5.64	2.20	5.83	2.21	6.22	2.24	6.65	2.27
							46	5.30	2.17	5.09	2.20	5.42	2.23	5.60	2.25	5.79	2.26	6.19	2.29	6.63	2.32
2000	2000	2500			6500	96%	10	5.74	1.41	8.10	1.44	8.26	1.47	8.35	1.49	8.45	1.51	8.69	1.54	8.97	1.57
							12	5.74	1.44	7.88	1.48	8.05	1.51	8.15	1.53	8.25	1.54	8.50	1.57	8.79	1.61
							14	5.74	1.48	7.67	1.51	7.85	1.55	7.95	1.56	8.06	1.58	8.32	1.61	8.62	1.64
							16	5.74	1.51	7.47	1.55	7.66	1.58	7.76	1.60	7.88	1.62	8.15	1.65	8.47	1.68
							18	5.74	1.55	7.28	1.59	7.47	1.62	7.59	1.64	7.71	1.65	7.99	1.69	8.32	1.72
							20	5.74	1.59	7.09	1.63	7.30	1.66	7.42	1.68	7.55	1.69	7.84	1.72	8.18	1.75
							21	5.74	1.61	7.00	1.65	7.22	1.68	7.34	1.70	7.47	1.71	7.77	1.74	8.11	1.77
							23	5.74	1.65	6.83	1.69	7.06	1.72	7.19	1.74	7.33	1.75	7.63	1.78	7.99	1.81
							25	5.74	1.70	6.67	1.73	6.91	1.76	7.04	1.78	7.19	1.80	7.51	1.83	7.87	1.86
							27	5.74	1.74	6.52	1.77	6.77	1.81	6.91	1.82	7.06	1.84	7.39	1.87	7.76	1.90
							29	5.74	1.78	6.37	1.82	6.63	1.85	6.78	1.87	6.93	1.88	7.28	1.91	7.66	1.94
							31	5.74	1.83	6.24	1.86	6.51	1.90	6.66	1.91	6.82	1.93	7.18	1.96	7.57	1.99
							33	5.74	1.87	6.11	1.91	6.40	1.94	6.55	1.96	6.72	1.97	7.08	2.00	7.49	2.03
							35	5.74	1.92	6.00	1.96	6.29	1.99	6.50	2.00	6.63	2.02	7.00	2.05	7.42	2.08
							37	5.74	1.97	5.89	2.00	6.19	2.04	6.36	2.05	6.54	2.07	6.93	2.10	7.36	2.13
							39	5.74	2.02	5.79	2.05	6.11	2.09	6.28	2.10	6.46	2.12	6.86	2.15	7.30	2.18
							42	5.74	2.10	5.66	2.13	5.99	2.16	6.17	2.18	6.37	2.19	6.78	2.22	7.24	2.25
							44	5.74	2.15	5.58	2.18	5.93	2.21	6.12	2.23	6.31	2.25	6.74	2.28	7.21	2.30
							46	5.74	2.20	5.52	2.24	5.87	2.27	6.07	2.28	6.27	2.30	6.71	2.33	7.19	2.36

* All figures comply with EN14511

1. Cooling capacity is based on 27°CDB / 19°CWB (indoor temperature), 35°CDB (outdoor temperature).
2. Heating capacity is based on 20°CDB (indoor temperature), 7°CDB/6°CWB (outdoor temperature).
3. Capacities are based on the following conditions : - Corresponding refrigerant piping length : 5m / - Level difference : 0m
4. The total ability of connected a indoor unit is up to 11kW
5. It is impossible to connect the indoor unit for one room only.
6. This data is reference data for temperature capacity trend.

1) Cooling

COOLING

Combination (Capacity Index)					Combination (Total)	Combination (%)	Outdoor Temperature (°C, DB)	Indoor Temperature(°C, WB)													
								14		16		18		19		20		22		24	
								TC(kW)	PI(kW)	TC(kW)	PI(kW)	TC(kW)	PI(kW)	TC(kW)	PI(kW)	TC(kW)	PI(kW)	TC(kW)	PI(kW)	TC(kW)	PI(kW)
2000	2000	3500			7500	110%	10	6.01	1.45	8.48	1.49	8.64	1.53	8.73	1.54	8.84	1.56	9.09	1.59	9.38	1.63
							12	6.01	1.49	8.25	1.53	8.42	1.56	8.52	1.58	8.63	1.60	8.89	1.63	9.20	1.66
							14	6.01	1.53	8.03	1.56	8.21	1.60	8.32	1.62	8.44	1.63	8.71	1.67	9.02	1.70
							16	6.01	1.57	7.81	1.60	8.01	1.64	8.12	1.66	8.25	1.67	8.53	1.71	8.86	1.74
							18	6.01	1.61	7.61	1.64	7.82	1.68	7.94	1.70	8.07	1.71	8.36	1.74	8.70	1.78
							20	6.01	1.65	7.42	1.68	7.64	1.72	7.76	1.74	7.90	1.75	8.21	1.78	8.56	1.82
							21	6.01	1.67	7.33	1.70	7.55	1.74	7.68	1.76	7.82	1.77	8.13	1.81	8.49	1.84
							23	6.01	1.71	7.15	1.75	7.38	1.78	7.52	1.80	7.66	1.82	7.99	1.85	8.35	1.88
							25	6.01	1.75	6.98	1.79	7.23	1.83	7.37	1.84	7.52	1.86	7.85	1.89	8.23	1.92
							27	6.01	1.80	6.82	1.84	7.08	1.87	7.22	1.89	7.38	1.90	7.73	1.93	8.12	1.97
							29	6.01	1.85	6.67	1.88	6.94	1.92	7.09	1.93	7.25	1.95	7.61	1.98	8.02	2.01
							31	6.01	1.89	6.53	1.93	6.81	1.96	6.97	1.98	7.14	1.99	7.51	2.03	7.92	2.06
							33	6.01	1.94	6.40	1.98	6.69	2.01	6.85	2.03	7.03	2.04	7.41	2.07	7.84	2.10
							35	6.01	1.99	6.27	2.02	6.58	2.06	6.80	2.07	6.93	2.09	7.32	2.12	7.76	2.15
							37	6.01	2.04	6.16	2.07	6.48	2.11	6.66	2.12	6.84	2.14	7.25	2.17	7.70	2.20
							39	6.01	2.09	6.06	2.13	6.39	2.16	6.57	2.18	6.76	2.19	7.18	2.22	7.64	2.25
							42	6.01	2.17	5.92	2.21	6.27	2.24	6.46	2.25	6.66	2.27	7.10	2.30	7.57	2.33
							44	6.01	2.22	5.84	2.26	6.20	2.29	6.40	2.31	6.60	2.32	7.05	2.35	7.54	2.38
							46	6.01	2.28	5.77	2.31	6.14	2.35	6.35	2.36	6.56	2.38	7.02	2.41	7.52	2.44
2000	2000	5000			9000	132%	10	7.65	1.40	7.95	1.43	8.25	1.46	8.41	1.48	8.56	1.49	8.87	1.52	9.19	1.55
							12	7.51	1.44	7.81	1.47	8.12	1.50	8.27	1.52	8.43	1.53	8.74	1.56	9.06	1.59
							14	7.38	1.48	7.68	1.51	7.99	1.54	8.14	1.55	8.30	1.57	8.61	1.60	8.93	1.63
							16	7.25	1.52	7.55	1.55	7.86	1.58	8.01	1.59	8.17	1.61	8.48	1.64	8.80	1.67
							18	7.12	1.56	7.42	1.59	7.73	1.62	7.88	1.63	8.04	1.65	8.35	1.68	8.68	1.71
							20	6.99	1.60	7.29	1.63	7.60	1.66	7.75	1.68	7.91	1.69	8.23	1.72	8.55	1.75
							21	6.92	1.62	7.22	1.65	7.53	1.68	7.69	1.70	7.84	1.71	8.16	1.74	8.48	1.77
							23	6.79	1.66	7.09	1.69	7.40	1.72	7.56	1.74	7.71	1.75	8.03	1.78	8.35	1.82
							25	6.66	1.70	6.96	1.73	7.27	1.76	7.43	1.78	7.59	1.80	7.90	1.83	8.23	1.86
							27	6.53	1.74	6.83	1.78	7.14	1.81	7.30	1.82	7.46	1.84	7.78	1.87	8.10	1.90
							29	6.40	1.79	6.70	1.82	7.01	1.85	7.17	1.87	7.33	1.88	7.65	1.92	7.97	1.95
							31	6.27	1.83	6.57	1.86	6.89	1.90	7.04	1.91	7.20	1.93	7.52	1.96	7.85	1.99
							33	6.14	1.88	6.45	1.91	6.76	1.94	6.92	1.96	7.07	1.97	7.39	2.01	7.72	2.04
							35	6.01	1.92	6.32	1.96	6.63	1.99	6.80	2.00	6.95	2.02	7.27	2.05	7.59	2.09
							37	5.88	1.97	6.19	2.00	6.50	2.03	6.66	2.05	6.82	2.07	7.14	2.10	7.47	2.13
							39	5.75	2.02	6.06	2.05	6.38	2.08	6.53	2.10	6.69	2.12	7.02	2.15	7.34	2.18
							42	5.56	2.09	5.87	2.12	6.19	2.15	6.34	2.17	6.50	2.19	6.83	2.22	7.15	2.25
							44	5.43	2.14	5.74	2.17	6.06	2.20	6.22	2.22	6.38	2.24	6.70	2.27	7.03	2.30
							46	5.31	2.19	5.62	2.22	5.93	2.25	6.09	2.27	6.25	2.29	6.58	2.32	6.91	2.35
2000	2500	2500			7000	103%	10	5.74	1.43	8.10	1.46	8.26	1.50	8.35	1.51	8.45	1.53	8.69	1.56	8.97	1.59
							12	5.74	1.46	7.88	1.50	8.05	1.53	8.15	1.55	8.25	1.57	8.50	1.60	8.79	1.63
							14	5.74	1.50	7.67	1.53	7.85	1.57	7.95	1.59	8.06	1.60	8.32	1.63	8.62	1.67
							16	5.74	1.54	7.47	1.57	7.66	1.61	7.76	1.62	7.88	1.64	8.15	1.67	8.47	1.70
							18	5.74	1.58	7.28	1.61	7.47	1.65	7.59	1.66	7.71	1.68	7.99	1.71	8.32	1.74
							20	5.74	1.62	7.09	1.65	7.30	1.69	7.42	1.70	7.55	1.72	7.84	1.75	8.18	1.78
							21	5.74	1.64	7.00	1.67	7.22	1.71	7.34	1.72	7.47	1.74	7.77	1.77	8.11	1.80
							23	5.74	1.68	6.83	1.71	7.06	1.75	7.19	1.76	7.33	1.78	7.63	1.81	7.99	1.84
							25	5.74	1.72	6.67	1.76	6.91	1.79	7.04	1.81	7.19	1.82	7.51	1.85	7.87	1.88
							27	5.74	1.76	6.52	1.80	6.77	1.83	6.91	1.85	7.06	1.87	7.39	1.90	7.76	1.93
							29	5.74	1.81	6.37	1.84	6.63	1.88	6.78	1.89	6.93	1.91	7.28	1.94	7.66	1.97
							31	5.74	1.86	6.24	1.89	6.51	1.92	6.66	1.94	6.82	1.96	7.18	1.99	7.57	2.02
							33	5.74	1.90	6.11	1.94	6.40	1.97	6.55	1.99	6.72	2.00	7.08	2.03	7.49	2.06
							35	5.74	1.95	6.00	1.99	6.29	2.02	6.50	2.03	6.63	2.05	7.00	2.08	7.42	2.11
							37	5.74	2.00	5.89	2.03	6.19	2.07	6.36	2.08	6.54	2.10	6.93	2.13	7.36	2.16
							39	5.74	2.05	5.79	2.09	6.11	2.12	6.28	2.13	6.46	2.15	6.86	2.18	7.30	2.21
							42	5.74	2.13	5.66	2.16	5.99	2.20	6.17	2.21	6.37	2.23	6.78	2.26	7.24	2.29
							44	5.74	2.18	5.58	2.22	5.93	2.25	6.12	2.26	6.31	2.28	6.74	2.31	7.21	2.34
							46	5.74	2.24	5.52	2.27	5.87	2.30	6.07	2.32	6.27	2.33	6.71	2.36	7.19	2.39
2000	2500	3500			8000	118%	10	7.65	1.47	7.95	1.50	8.25	1.53	8.41	1.54	8.56	1.56	8.87	1.59	9.19	1.62
							12	7.51	1.51	7.81	1.54	8.12	1.57	8.27	1.58	8.43	1.60	8.74	1.63	9.06	1.66
							14	7.38	1.55	7.68	1.58	7.99	1.61	8.14	1.62	8.30	1.64	8.61	1.67	8.93	1.70
							16	7.25	1.59	7.55	1.62	7.86	1.65	8.01	1.67	8.17	1.68	8.48	1.71	8.80	1.75
							18	7.12	1.63	7.42	1.66	7.73	1.69	7.88	1.71	8.04	1.72	8.35	1.76	8.68	1.79
							20	6.99	1.67	7.29	1.70	7.60	1.73	7.75	1.75	7.91	1.77	8.23	1.80	8.55	1.83
							21	6.92	1.69	7.22	1.72	7.53	1.76	7.69	1.77	7.84	1.79	8.16	1.82	8.48	1.85
							23	6.79	1.73	7.09	1.77	7.40	1.80	7.56	1.82	7.71	1.83	8.03	1.87	8.35	1.90
							25	6.66	1.78	6.96	1.81	7.27	1.84	7.43	1.86	7.59	1.88	7.90	1.91	8.23	1.94
							27	6.53	1.82	6.83	1.86	7.14	1.89	7.30	1.91	7.46	1.92	7.78	1.96	8.10	1.99
							29	6.40	1.87	6.70	1.90	7.01	1.94	7.17	1.95	7.33	1.97	7.65	2.00	7.97	2.04
							31	6.27	1.92	6.57	1.95	6.89	1.98	7.04	2.00	7.20	2.02	7.52	2.05	7.85	2.08
							33	6.14	1.96	6.45	2.00	6.76	2.03	6.92	2.05	7.07	2.06	7.39	2.10	7.72	2.13
							35	6.01	2.01	6.32	2.04	6.63	2.08	6.80	2.09	6.95	2.11	7.27	2.15	7.59	2.18
							37	5.88	2.06	6.19	2.09	6.50	2.13	6.66	2.14	6.82	2.16	7.14	2.19	7.47	2.23
							39	5.75	2.11	6.06	2.14	6.38	2.18	6.53	2.19	6.69	2.21	7.02	2.24	7.34	2.28
							42	5.56	2.18	5.87	2.22	6.19	2.25	6.34	2.27	6.50	2.29	6.83	2.32	7.15	2.36
							44	5.43	2.23	5.74	2.27	6.06	2.30	6.22	2.32	6.38	2.34	6.70	2.37	7.03	2.41
							46	5.31	2.29	5.62	2.32	5.93	2.36	6.09	2.37	6.25	2.39	6.58	2.43	6.91	2.46

* All figures comply with EN14511

1. Cooling capacity is based on 27°CDB / 19°CWB (indoor temperature), 35°CDB (outdoor temperature).
2. Heating capacity is based on 20°CDB (indoor temperature), 7°CDB/6°CWB (outdoor temperature).
3. Capacities are based on the following conditions : - Corresponding refrigerant piping length : 5m / - Level difference : 0m
4. The total ability of connected a indoor unit is up to 11kW
5. It is impossible to connect the indoor unit for one room only.
6. This data is reference data for temperature capacity trend.

4 AJ068FCJ3EH

1) Cooling

COOLING

Combination (Capacity Index)					Combination (Total)	Combination (%)	Outdoor Temperature (°C, DB)	Indoor Temperature(°C, WB)													
								14		16		18		19		20		22		24	
								TC(kW)	PI(kW)	TC(kW)	PI(kW)	TC(kW)	PI(kW)	TC(kW)	PI(kW)	TC(kW)	PI(kW)	TC(kW)	PI(kW)	TC(kW)	PI(kW)
2000	2500	5000			9500	140%	10	7.65	1.41	7.95	1.44	8.25	1.47	8.41	1.49	8.56	1.50	8.87	1.53	9.19	1.56
							12	7.51	1.45	7.81	1.48	8.12	1.51	8.27	1.52	8.43	1.54	8.74	1.57	9.06	1.60
							14	7.38	1.49	7.68	1.52	7.99	1.55	8.14	1.56	8.30	1.58	8.61	1.61	8.93	1.64
							16	7.25	1.53	7.55	1.56	7.86	1.59	8.01	1.60	8.17	1.62	8.48	1.65	8.80	1.68
							18	7.12	1.57	7.42	1.60	7.73	1.63	7.88	1.64	8.04	1.66	8.35	1.69	8.68	1.72
							20	6.99	1.61	7.29	1.64	7.60	1.67	7.75	1.68	7.91	1.70	8.23	1.73	8.55	1.76
							21	6.92	1.63	7.22	1.66	7.53	1.69	7.69	1.70	7.84	1.72	8.16	1.75	8.48	1.78
							23	6.79	1.67	7.09	1.70	7.40	1.73	7.56	1.75	7.71	1.76	8.03	1.79	8.35	1.83
							25	6.66	1.71	6.96	1.74	7.27	1.77	7.43	1.79	7.59	1.81	7.90	1.84	8.23	1.87
							27	6.53	1.75	6.83	1.79	7.14	1.82	7.30	1.83	7.46	1.85	7.78	1.88	8.10	1.91
							29	6.40	1.80	6.70	1.83	7.01	1.86	7.17	1.88	7.33	1.89	7.65	1.93	7.97	1.96
							31	6.27	1.84	6.57	1.87	6.89	1.91	7.04	1.92	7.20	1.94	7.52	1.97	7.85	2.00
							33	6.14	1.89	6.45	1.92	6.76	1.95	6.92	1.97	7.07	1.98	7.39	2.02	7.72	2.05
							35	6.01	1.93	6.32	1.97	6.63	2.00	6.80	2.01	6.95	2.03	7.27	2.06	7.59	2.10
							37	5.88	1.98	6.19	2.01	6.50	2.04	6.66	2.06	6.82	2.08	7.14	2.11	7.47	2.14
							39	5.75	2.03	6.06	2.06	6.38	2.09	6.53	2.11	6.69	2.13	7.02	2.16	7.34	2.19
							42	5.56	2.10	5.87	2.13	6.19	2.17	6.34	2.18	6.50	2.20	6.83	2.23	7.15	2.27
							44	5.43	2.15	5.74	2.18	6.06	2.21	6.22	2.23	6.38	2.25	6.70	2.28	7.03	2.32
							46	5.31	2.20	5.62	2.23	5.93	2.26	6.09	2.28	6.25	2.30	6.58	2.33	6.91	2.37
2000	3500	3500			9000	132%	10	7.65	1.41	7.95	1.44	8.25	1.47	8.41	1.49	8.56	1.50	8.87	1.53	9.19	1.56
							12	7.51	1.45	7.81	1.48	8.12	1.51	8.27	1.52	8.43	1.54	8.74	1.57	9.06	1.60
							14	7.38	1.49	7.68	1.52	7.99	1.55	8.14	1.56	8.30	1.58	8.61	1.61	8.93	1.64
							16	7.25	1.53	7.55	1.56	7.86	1.59	8.01	1.60	8.17	1.62	8.48	1.65	8.80	1.68
							18	7.12	1.57	7.42	1.60	7.73	1.63	7.88	1.64	8.04	1.66	8.35	1.69	8.68	1.72
							20	6.99	1.61	7.29	1.64	7.60	1.67	7.75	1.68	7.91	1.70	8.23	1.73	8.55	1.76
							21	6.92	1.63	7.22	1.66	7.53	1.69	7.69	1.70	7.84	1.72	8.16	1.75	8.48	1.78
							23	6.79	1.67	7.09	1.70	7.40	1.73	7.56	1.75	7.71	1.76	8.03	1.79	8.35	1.83
							25	6.66	1.71	6.96	1.74	7.27	1.77	7.43	1.79	7.59	1.81	7.90	1.84	8.23	1.87
							27	6.53	1.75	6.83	1.79	7.14	1.82	7.30	1.83	7.46	1.85	7.78	1.88	8.10	1.91
							29	6.40	1.80	6.70	1.83	7.01	1.86	7.17	1.88	7.33	1.89	7.65	1.93	7.97	1.96
							31	6.27	1.84	6.57	1.87	6.89	1.91	7.04	1.92	7.20	1.94	7.52	1.97	7.85	2.00
							33	6.14	1.89	6.45	1.92	6.76	1.95	6.92	1.97	7.07	1.98	7.39	2.02	7.72	2.05
							35	6.01	1.93	6.32	1.97	6.63	2.00	6.80	2.01	6.95	2.03	7.27	2.06	7.59	2.10
							37	5.88	1.98	6.19	2.01	6.50	2.04	6.66	2.06	6.82	2.08	7.14	2.11	7.47	2.14
							39	5.75	2.03	6.06	2.06	6.38	2.09	6.53	2.11	6.69	2.13	7.02	2.16	7.34	2.19
							42	5.56	2.10	5.87	2.13	6.19	2.17	6.34	2.18	6.50	2.20	6.83	2.23	7.15	2.27
							44	5.43	2.15	5.74	2.18	6.06	2.21	6.22	2.23	6.38	2.25	6.70	2.28	7.03	2.32
							46	5.31	2.20	5.62	2.23	5.93	2.26	6.09	2.28	6.25	2.30	6.58	2.33	6.91	2.37
2000	3500	5000			10500	154%	10	7.65	1.44	7.95	1.47	8.25	1.50	8.41	1.52	8.56	1.53	8.87	1.56	9.19	1.59
							12	7.51	1.48	7.81	1.51	8.12	1.54	8.27	1.55	8.43	1.57	8.74	1.60	9.06	1.63
							14	7.38	1.52	7.68	1.55	7.99	1.58	8.14	1.59	8.30	1.61	8.61	1.64	8.93	1.67
							16	7.25	1.56	7.55	1.59	7.86	1.62	8.01	1.63	8.17	1.65	8.48	1.68	8.80	1.71
							18	7.12	1.60	7.42	1.63	7.73	1.66	7.88	1.68	8.04	1.69	8.35	1.72	8.68	1.75
							20	6.99	1.64	7.29	1.67	7.60	1.70	7.75	1.72	7.91	1.73	8.23	1.76	8.55	1.80
							21	6.92	1.66	7.22	1.69	7.53	1.72	7.69	1.74	7.84	1.75	8.16	1.79	8.48	1.82
							23	6.79	1.70	7.09	1.73	7.40	1.77	7.56	1.78	7.71	1.80	8.03	1.83	8.35	1.86
							25	6.66	1.74	6.96	1.78	7.27	1.81	7.43	1.83	7.59	1.84	7.90	1.87	8.23	1.91
							27	6.53	1.79	6.83	1.82	7.14	1.85	7.30	1.87	7.46	1.89	7.78	1.92	8.10	1.95
							29	6.40	1.83	6.70	1.87	7.01	1.90	7.17	1.91	7.33	1.93	7.65	1.96	7.97	2.00
							31	6.27	1.88	6.57	1.91	6.89	1.94	7.04	1.96	7.20	1.98	7.52	2.01	7.85	2.04
							33	6.14	1.92	6.45	1.96	6.76	1.99	6.92	2.01	7.07	2.02	7.39	2.06	7.72	2.09
							35	6.01	1.97	6.32	2.00	6.63	2.04	6.80	2.05	6.95	2.07	7.27	2.10	7.59	2.14
							37	5.88	2.02	6.19	2.05	6.50	2.09	6.66	2.10	6.82	2.12	7.14	2.15	7.47	2.19
							39	5.75	2.07	6.06	2.10	6.38	2.13	6.53	2.15	6.69	2.17	7.02	2.20	7.34	2.24
							42	5.56	2.14	5.87	2.17	6.19	2.21	6.34	2.23	6.50	2.24	6.83	2.28	7.15	2.31
							44	5.43	2.19	5.74	2.22	6.06	2.26	6.22	2.28	6.38	2.29	6.70	2.33	7.03	2.36
							46	5.31	2.24	5.62	2.28	5.93	2.31	6.09	2.33	6.25	2.34	6.58	2.38	6.91	2.41
2500	2500	2500			7500	110%	10	7.65	1.45	7.95	1.48	8.25	1.51	8.41	1.52	8.56	1.54	8.87	1.57	9.19	1.60
							12	7.51	1.48	7.81	1.52	8.12	1.55	8.27	1.56	8.43	1.58	8.74	1.61	9.06	1.64
							14	7.38	1.52	7.68	1.55	7.99	1.59	8.14	1.60	8.30	1.62	8.61	1.65	8.93	1.68
							16	7.25	1.56	7.55	1.60	7.86	1.63	8.01	1.64	8.17	1.66	8.48	1.69	8.80	1.72
							18	7.12	1.60	7.42	1.64	7.73	1.67	7.88	1.68	8.04	1.70	8.35	1.73	8.68	1.76
							20	6.99	1.65	7.29	1.68	7.60	1.71	7.75	1.73	7.91	1.74	8.23	1.77	8.55	1.81
							21	6.92	1.67	7.22	1.70	7.53	1.73	7.69	1.75	7.84	1.76	8.16	1.79	8.48	1.83
							23	6.79	1.71	7.09	1.74	7.40	1.77	7.56	1.79	7.71	1.81	8.03	1.84	8.35	1.87
							25	6.66	1.75	6.96	1.79	7.27	1.82	7.43	1.83	7.59	1.85	7.90	1.88	8.23	1.92
							27	6.53	1.80	6.83	1.83	7.14	1.86	7.30	1.88	7.46	1.90	7.78	1.93	8.10	1.96
							29	6.40	1.84	6.70	1.87	7.01	1.91	7.17	1.92	7.33	1.94	7.65	1.97	7.97	2.01
							31	6.27	1.89	6.57	1.92	6.89	1.95	7.04	1.97	7.20	1.99	7.52	2.02	7.85	2.05
							33	6.14	1.93	6.45	1.97	6.76	2.00	6.92	2.02	7.07	2.03	7.39	2.07	7.72	2.10
							35	6.01	1.98	6.32	2.01	6.63	2.05	6.80	2.06	6.95	2.08	7.27	2.11	7.59	2.15
							37	5.88	2.03	6.19	2.06	6.50	2.10	6.66	2.11	6.82	2.13	7.14	2.16	7.47	2.20
							39	5.75	2.08	6.06	2.11	6.38	2.14	6.53	2.16	6.69	2.18	7.02	2.21	7.34	2.25
							42	5.56	2.15	5.87	2.19	6.19	2.22	6.34	2.24	6.50	2.25	6.83	2.29	7.15	2.32
							44	5.43	2.20	5.74	2.24	6.06	2.27	6.22	2.29	6.38	2.30	6.70	2.34	7.03	2.37
							46	5.31	2.25	5.62	2.29	5.93	2.32	6.09	2.34	6.25	2.36	6.58	2.39	6.91	2.42

* All figures comply with EN14511

1. Cooling capacity is based on 27°CDB / 19°CWB (indoor temperature), 35°CDB (outdoor temperature).
2. Heating capacity is based on 20°CDB (indoor temperature), 7°CDB/6°CWB (outdoor temperature).
3. Capacities are based on the following conditions : - Corresponding refrigerant piping length : 5m / - Level difference : 0m
4. The total ability of connected a indoor unit is up to 11kW
5. It is impossible to connect the indoor unit for one room only.
6. This data is reference data for temperature capacity trend.

1) Cooling

COOLING

Combination (Capacity Index)					Combination (Total)	Combination (%)	Outdoor Temperature (°C, DB)	Indoor Temperature(°C, WB)													
								14		16		18		19		20		22		24	
								TC(kW)	PI(kW)	TC(kW)	PI(kW)	TC(kW)	PI(kW)	TC(kW)	PI(kW)	TC(kW)	PI(kW)	TC(kW)	PI(kW)	TC(kW)	PI(kW)
2500	2500	3500			8500	125%	10	7.65	1.49	7.95	1.53	8.25	1.56	8.41	1.57	8.56	1.59	8.87	1.62	9.19	1.65
							12	7.51	1.53	7.81	1.57	8.12	1.60	8.27	1.61	8.43	1.63	8.74	1.66	9.06	1.69
							14	7.38	1.58	7.68	1.61	7.99	1.64	8.14	1.66	8.30	1.67	8.61	1.70	8.93	1.74
							16	7.25	1.62	7.55	1.65	7.86	1.68	8.01	1.70	8.17	1.71	8.48	1.75	8.80	1.78
							18	7.12	1.66	7.42	1.69	7.73	1.72	7.88	1.74	8.04	1.76	8.35	1.79	8.68	1.82
							20	6.99	1.70	7.29	1.73	7.60	1.77	7.75	1.78	7.91	1.80	8.23	1.83	8.55	1.87
							21	6.92	1.72	7.22	1.76	7.53	1.79	7.69	1.81	7.84	1.82	8.16	1.86	8.48	1.89
							23	6.79	1.77	7.09	1.80	7.40	1.83	7.56	1.85	7.71	1.87	8.03	1.90	8.35	1.93
							25	6.66	1.81	6.96	1.85	7.27	1.88	7.43	1.90	7.59	1.91	7.90	1.95	8.23	1.98
							27	6.53	1.86	6.83	1.89	7.14	1.93	7.30	1.94	7.46	1.96	7.78	1.99	8.10	2.03
							29	6.40	1.90	6.70	1.94	7.01	1.97	7.17	1.99	7.33	2.01	7.65	2.04	7.97	2.07
							31	6.27	1.95	6.57	1.99	6.89	2.02	7.04	2.04	7.20	2.05	7.52	2.09	7.85	2.12
							33	6.14	2.00	6.45	2.03	6.76	2.07	6.92	2.09	7.07	2.10	7.39	2.14	7.72	2.17
							35	6.01	2.05	6.32	2.08	6.63	2.12	6.80	2.13	6.95	2.15	7.27	2.19	7.59	2.22
							37	5.88	2.10	6.19	2.13	6.50	2.17	6.66	2.18	6.82	2.20	7.14	2.24	7.47	2.27
							39	5.75	2.15	6.06	2.18	6.38	2.22	6.53	2.24	6.69	2.25	7.02	2.29	7.34	2.32
							42	5.56	2.22	5.87	2.26	6.19	2.29	6.34	2.31	6.50	2.33	6.83	2.37	7.15	2.40
							44	5.43	2.28	5.74	2.31	6.06	2.35	6.22	2.36	6.38	2.38	6.70	2.42	7.03	2.45
							46	5.31	2.33	5.62	2.36	5.93	2.40	6.09	2.42	6.25	2.44	6.58	2.47	6.91	2.51
2500	2500	5000			10000	147%	10	7.65	1.42	7.95	1.45	8.25	1.49	8.41	1.50	8.56	1.52	8.87	1.55	9.19	1.58
							12	7.51	1.46	7.81	1.49	8.12	1.52	8.27	1.54	8.43	1.55	8.74	1.58	9.06	1.62
							14	7.38	1.50	7.68	1.53	7.99	1.56	8.14	1.58	8.30	1.59	8.61	1.62	8.93	1.66
							16	7.25	1.54	7.55	1.57	7.86	1.60	8.01	1.62	8.17	1.63	8.48	1.66	8.80	1.70
							18	7.12	1.58	7.42	1.61	7.73	1.64	7.88	1.66	8.04	1.67	8.35	1.71	8.68	1.74
							20	6.99	1.62	7.29	1.65	7.60	1.68	7.75	1.70	7.91	1.72	8.23	1.75	8.55	1.78
							21	6.92	1.64	7.22	1.67	7.53	1.71	7.69	1.72	7.84	1.74	8.16	1.77	8.48	1.80
							23	6.79	1.68	7.09	1.72	7.40	1.75	7.56	1.76	7.71	1.78	8.03	1.81	8.35	1.84
							25	6.66	1.73	6.96	1.76	7.27	1.79	7.43	1.81	7.59	1.82	7.90	1.86	8.23	1.89
							27	6.53	1.77	6.83	1.80	7.14	1.84	7.30	1.85	7.46	1.87	7.78	1.90	8.10	1.93
							29	6.40	1.82	6.70	1.85	7.01	1.88	7.17	1.90	7.33	1.91	7.65	1.94	7.97	1.98
							31	6.27	1.86	6.57	1.89	6.89	1.93	7.04	1.94	7.20	1.96	7.52	1.99	7.85	2.02
							33	6.14	1.91	6.45	1.94	6.76	1.97	6.92	1.99	7.07	2.00	7.39	2.04	7.72	2.07
							35	6.01	1.95	6.32	1.98	6.63	2.02	6.80	2.03	6.95	2.05	7.27	2.08	7.59	2.12
							37	5.88	2.00	6.19	2.03	6.50	2.07	6.66	2.08	6.82	2.10	7.14	2.13	7.47	2.16
							39	5.75	2.05	6.06	2.08	6.38	2.11	6.53	2.13	6.69	2.15	7.02	2.18	7.34	2.21
							42	5.56	2.12	5.87	2.15	6.19	2.19	6.34	2.20	6.50	2.22	6.83	2.25	7.15	2.29
							44	5.43	2.17	5.74	2.20	6.06	2.24	6.22	2.25	6.38	2.27	6.70	2.30	7.03	2.34
							46	5.31	2.22	5.62	2.25	5.93	2.29	6.09	2.30	6.25	2.32	6.58	2.36	6.91	2.39
2500	3500	3500			9500	140%	10	7.65	1.42	7.95	1.45	8.25	1.48	8.41	1.49	8.56	1.51	8.87	1.54	9.19	1.57
							12	7.51	1.46	7.81	1.49	8.12	1.52	8.27	1.53	8.43	1.55	8.74	1.58	9.06	1.61
							14	7.38	1.49	7.68	1.52	7.99	1.56	8.14	1.57	8.30	1.59	8.61	1.62	8.93	1.65
							16	7.25	1.53	7.55	1.56	7.86	1.59	8.01	1.61	8.17	1.63	8.48	1.66	8.80	1.69
							18	7.12	1.57	7.42	1.60	7.73	1.64	7.88	1.65	8.04	1.67	8.35	1.70	8.68	1.73
							20	6.99	1.61	7.29	1.65	7.60	1.68	7.75	1.69	7.91	1.71	8.23	1.74	8.55	1.77
							21	6.92	1.63	7.22	1.67	7.53	1.70	7.69	1.71	7.84	1.73	8.16	1.76	8.48	1.79
							23	6.79	1.68	7.09	1.71	7.40	1.74	7.56	1.76	7.71	1.77	8.03	1.80	8.35	1.83
							25	6.66	1.72	6.96	1.75	7.27	1.78	7.43	1.80	7.59	1.81	7.90	1.85	8.23	1.88
							27	6.53	1.76	6.83	1.79	7.14	1.83	7.30	1.84	7.46	1.86	7.78	1.89	8.10	1.92
							29	6.40	1.81	6.70	1.84	7.01	1.87	7.17	1.89	7.33	1.90	7.65	1.93	7.97	1.97
							31	6.27	1.85	6.57	1.88	6.89	1.92	7.04	1.93	7.20	1.95	7.52	1.98	7.85	2.01
							33	6.14	1.90	6.45	1.93	6.76	1.96	6.92	1.98	7.07	1.99	7.39	2.03	7.72	2.06
							35	6.01	1.94	6.32	1.98	6.63	2.01	6.80	2.02	6.95	2.04	7.27	2.07	7.59	2.11
							37	5.88	1.99	6.19	2.02	6.50	2.06	6.66	2.07	6.82	2.09	7.14	2.12	7.47	2.15
							39	5.75	2.04	6.06	2.07	6.38	2.10	6.53	2.12	6.69	2.14	7.02	2.17	7.34	2.20
							42	5.56	2.11	5.87	2.14	6.19	2.18	6.34	2.19	6.50	2.21	6.83	2.24	7.15	2.28
							44	5.43	2.16	5.74	2.19	6.06	2.23	6.22	2.24	6.38	2.26	6.70	2.29	7.03	2.33
							46	5.31	2.21	5.62	2.24	5.93	2.28	6.09	2.29	6.25	2.31	6.58	2.34	6.91	2.38
2500	3500	5000			11000	162%	10	7.65	1.45	7.95	1.48	8.25	1.51	8.41	1.53	8.56	1.55	8.87	1.58	9.19	1.61
							12	7.51	1.49	7.81	1.52	8.12	1.55	8.27	1.57	8.43	1.58	8.74	1.62	9.06	1.65
							14	7.38	1.53	7.68	1.56	7.99	1.59	8.14	1.61	8.30	1.63	8.61	1.66	8.93	1.69
							16	7.25	1.57	7.55	1.60	7.86	1.63	8.01	1.65	8.17	1.67	8.48	1.70	8.80	1.73
							18	7.12	1.61	7.42	1.64	7.73	1.68	7.88	1.69	8.04	1.71	8.35	1.74	8.68	1.77
							20	6.99	1.65	7.29	1.69	7.60	1.72	7.75	1.73	7.91	1.75	8.23	1.78	8.55	1.81
							21	6.92	1.68	7.22	1.71	7.53	1.74	7.69	1.76	7.84	1.77	8.16	1.80	8.48	1.84
							23	6.79	1.72	7.09	1.75	7.40	1.78	7.56	1.80	7.71	1.82	8.03	1.85	8.35	1.88
							25	6.66	1.76	6.96	1.79	7.27	1.83	7.43	1.84	7.59	1.86	7.90	1.89	8.23	1.92
							27	6.53	1.81	6.83	1.84	7.14	1.87	7.30	1.89	7.46	1.90	7.78	1.94	8.10	1.97
							29	6.40	1.85	6.70	1.88	7.01	1.92	7.17	1.93	7.33	1.95	7.65	1.98	7.97	2.02
							31	6.27	1.90	6.57	1.93	6.89	1.96	7.04	1.98	7.20	2.00	7.52	2.03	7.85	2.06
							33	6.14	1.94	6.45	1.98	6.76	2.01	6.92	2.03	7.07	2.04	7.39	2.08	7.72	2.11
							35	6.01	1.99	6.32	2.02	6.63	2.06	6.80	2.07	6.95	2.09	7.27	2.12	7.59	2.16
							37	5.88	2.04	6.19	2.07	6.50	2.11	6.66	2.12	6.82	2.14	7.14	2.17	7.47	2.21
							39	5.75	2.09	6.06	2.12	6.38	2.16	6.53	2.17	6.69	2.19	7.02	2.22	7.34	2.26
							42	5.56	2.16	5.87	2.20	6.19	2.23	6.34	2.25	6.50	2.26	6.83	2.30	7.15	2.33
							44	5.43	2.21	5.74	2.25	6.06	2.28	6.22	2.30	6.38	2.32	6.70	2.35	7.03	2.38
							46	5.31	2.26	5.62	2.30	5.93	2.33	6.09	2.35	6.25	2.37	6.58	2.40	6.91	2.44

* All figures comply with EN14511

1. Cooling capacity is based on 27°CDB / 19°CWB (indoor temperature), 35°CDB (outdoor temperature).
2. Heating capacity is based on 20°CDB (indoor temperature), 7°CDB/6°CWB (outdoor temperature).
3. Capacities are based on the following conditions : - Corresponding refrigerant piping length : 5m / - Level difference : 0m
4. The total ability of connected a indoor unit is up to 11kW
5. It is impossible to connect the indoor unit for one room only.
6. This data is reference data for temperature capacity trend.

4 AJ068FCJ3EH

1) Cooling

COOLING	Combination (Capacity Index)					Combination (Total)	Combination (%)	Outdoor Temperature (°C, DB)	Indoor Temperature(°C, WB)													
									14		16		18		19		20		22		24	
									TC(kW)	PI(kW)	TC(kW)	PI(kW)	TC(kW)	PI(kW)	TC(kW)	PI(kW)	TC(kW)	PI(kW)	TC(kW)	PI(kW)	TC(kW)	PI(kW)
	3500	3500	3500			10500	154%	10	7.65	1.40	7.95	1.43	8.25	1.46	8.41	1.48	8.56	1.49	8.87	1.52	9.19	1.55
								12	7.51	1.44	7.81	1.47	8.12	1.50	8.27	1.52	8.43	1.53	8.74	1.56	9.06	1.59
								14	7.38	1.48	7.68	1.51	7.99	1.54	8.14	1.55	8.30	1.57	8.61	1.60	8.93	1.63
								16	7.25	1.52	7.55	1.55	7.86	1.58	8.01	1.59	8.17	1.61	8.48	1.64	8.80	1.67
								18	7.12	1.56	7.42	1.59	7.73	1.62	7.88	1.63	8.04	1.65	8.35	1.68	8.68	1.71
								20	6.99	1.60	7.29	1.63	7.60	1.66	7.75	1.68	7.91	1.69	8.23	1.72	8.55	1.75
								21	6.92	1.62	7.22	1.65	7.53	1.68	7.69	1.70	7.84	1.71	8.16	1.74	8.48	1.77
								23	6.79	1.66	7.09	1.69	7.40	1.72	7.56	1.74	7.71	1.75	8.03	1.78	8.35	1.82
								25	6.66	1.70	6.96	1.73	7.27	1.76	7.43	1.78	7.59	1.80	7.90	1.83	8.23	1.86
								27	6.53	1.74	6.83	1.78	7.14	1.81	7.30	1.82	7.46	1.84	7.78	1.87	8.10	1.90
								29	6.40	1.79	6.70	1.82	7.01	1.85	7.17	1.87	7.33	1.88	7.65	1.92	7.97	1.95
								31	6.27	1.83	6.57	1.86	6.89	1.90	7.04	1.91	7.20	1.93	7.52	1.96	7.85	1.99
								33	6.14	1.88	6.45	1.91	6.76	1.94	6.92	1.96	7.07	1.97	7.39	2.01	7.72	2.04
								35	6.01	1.92	6.32	1.96	6.63	1.99	6.80	2.00	6.95	2.02	7.27	2.05	7.59	2.09
								37	5.88	1.97	6.19	2.00	6.50	2.03	6.66	2.05	6.82	2.07	7.14	2.10	7.47	2.13
								39	5.75	2.02	6.06	2.05	6.38	2.08	6.53	2.10	6.69	2.12	7.02	2.15	7.34	2.18
								42	5.56	2.09	5.87	2.12	6.19	2.15	6.34	2.17	6.50	2.19	6.83	2.22	7.15	2.25
								44	5.43	2.14	5.74	2.17	6.06	2.20	6.22	2.22	6.38	2.24	6.70	2.27	7.03	2.30
								46	5.31	2.19	5.62	2.22	5.93	2.25	6.09	2.27	6.25	2.29	6.58	2.32	6.91	2.35

* All figures comply with EN14511

1. Cooling capacity is based on 27°CDB / 19°CWB (indoor temperature), 35°CDB (outdoor temperature).
2. Heating capacity is based on 20°CDB (indoor temperature), 7°CDB/6°CWB (outdoor temperature).
3. Capacities are based on the following conditions : - Corresponding refrigerant piping length : 5m / - Level difference : 0m
4. The total ability of connected a indoor unit is up to 11kW
5. It is impossible to connect the indoor unit for one room only.
6. This data is reference data for temperature capacity trend.

2) Heating

HEATING	Combination (Capacity Index)					Combination (Total)	Combination (%)	Outdoor Temperature (°C, DB)	Indoor Temperature(°C, WB)													
									14		16		18		20		21		22		24	
									TC(kW)	PI(kW)	TC(kW)	PI(kW)	TC(kW)	PI(kW)	TC(kW)	PI(kW)	TC(kW)	PI(kW)	TC(kW)	PI(kW)	TC(kW)	PI(kW)
	2000					2000	29%	-15	1.26	0.76	1.22	0.77	1.18	0.78	1.17	0.78	1.15	0.79	1.13	0.79	1.11	0.80
								-10	1.51	0.79	1.47	0.81	1.43	0.82	1.41	0.82	1.40	0.83	1.37	0.83	1.34	0.84
								-5	1.76	0.83	1.71	0.85	1.67	0.86	1.66	0.86	1.64	0.87	1.61	0.88	1.58	0.88
								0	2.01	0.87	1.96	0.89	1.92	0.90	1.90	0.90	1.88	0.91	1.85	0.92	1.82	0.93
								2	2.11	0.89	2.06	0.90	2.02	0.91	2.00	0.92	1.98	0.92	1.95	0.93	1.92	0.94
								7	2.31	0.92	2.26	0.93	2.21	0.95	2.20	0.95	2.17	0.96	2.14	0.97	2.11	0.98
								10	2.51	0.95	2.46	0.96	2.41	0.98	2.39	0.98	2.37	0.99	2.33	1.00	2.30	1.01
								15	2.76	0.99	2.71	1.00	2.66	1.02	2.64	1.02	2.61	1.03	2.57	1.04	2.54	1.05
	2500					2500	37%	-15	1.89	0.91	1.83	0.93	1.78	0.94	1.75	0.95	1.73	0.95	1.69	0.96	1.66	0.97
								-10	2.26	0.96	2.20	0.98	2.14	0.99	2.12	1.00	2.09	1.00	2.05	1.01	2.02	1.02
								-5	2.64	1.01	2.57	1.02	2.51	1.04	2.48	1.04	2.46	1.05	2.41	1.06	2.37	1.07
								0	3.01	1.06	2.94	1.07	2.88	1.09	2.85	1.09	2.82	1.10	2.77	1.11	2.73	1.12
								2	3.16	1.08	3.09	1.09	3.03	1.11	3.00	1.11	2.97	1.12	2.92	1.13	2.87	1.14
								7	3.46	1.11	3.39	1.13	3.32	1.14	3.30	1.15	3.26	1.16	3.21	1.17	3.16	1.18
								10	3.76	1.15	3.69	1.17	3.62	1.18	3.59	1.19	3.55	1.20	3.50	1.21	3.45	1.22
								15	4.14	1.20	4.06	1.21	3.99	1.23	3.95	1.24	3.92	1.25	3.86	1.26	3.81	1.27
	3500					3500	51%	-15	2.29	1.07	2.22	1.09	2.15	1.10	2.13	1.11	2.10	1.12	2.05	1.13	2.01	1.14
								-10	2.74	1.13	2.67	1.15	2.60	1.16	2.57	1.17	2.54	1.17	2.49	1.19	2.44	1.20
								-5	3.20	1.19	3.12	1.20	3.04	1.22	3.01	1.23	2.98	1.23	2.92	1.25	2.88	1.26
								0	3.65	1.24	3.57	1.26	3.49	1.28	3.46	1.28	3.42	1.29	3.36	1.30	3.31	1.32
								2	3.83	1.26	3.75	1.28	3.67	1.30	3.63	1.31	3.60	1.31	3.54	1.33	3.48	1.34
								7	4.20	1.31	4.11	1.33	4.03	1.34	4.00	1.35	3.95	1.36	3.89	1.37	3.83	1.39
								10	4.56	1.35	4.47	1.37	4.38	1.39	4.35	1.40	4.31	1.41	4.24	1.42	4.18	1.43
								15	5.02	1.40	4.92	1.43	4.83	1.44	4.79	1.45	4.75	1.46	4.68	1.48	4.62	1.49
	5000					5000	74%	-15	3.21	1.45	3.11	1.47	3.02	1.49	2.98	1.50	2.94	1.50	2.87	1.52	2.82	1.53
								-10	3.84	1.52	3.73	1.55	3.64	1.57	3.60	1.57	3.55	1.58	3.48	1.60	3.42	1.61
								-5	4.48	1.60	4.36	1.62	4.26	1.64	4.22	1.65	4.17	1.66	4.09	1.68	4.03	1.69
								0	5.11	1.67	4.99	1.70	4.89	1.72	4.84	1.73	4.79	1.74	4.71	1.76	4.63	1.77
								2	5.37	1.70	5.25	1.73	5.14	1.75	5.09	1.76	5.04	1.77	4.95	1.79	4.88	1.81
								7	5.88	1.76	5.75	1.79	5.64	1.81	5.60	1.82	5.54	1.83	5.44	1.85	5.36	1.87
								10	6.39	1.82	6.26	1.85	6.14	1.87	6.08	1.88	6.03	1.89	5.94	1.92	5.85	1.93
								15	7.03	1.89	6.89	1.92	6.77	1.95	6.71	1.96	6.65	1.97	6.55	1.99	6.46	2.01

* All figures comply with EN14511

1. Cooling capacity is based on 27°CDB / 19°CWB (indoor temperature), 35°CDB (outdoor temperature).
2. Heating capacity is based on 20°CDB (indoor temperature), 7°CDB/6°CWB (outdoor temperature).
3. Capacities are based on the following conditions : - Corresponding refrigerant piping length : 5m / - Level difference : 0m
4. The total ability of connected a indoor unit is up to 11kW
5. It is impossible to connect the indoor unit for one room only.
6. This data is reference data for temperature capacity trend.

2) Heating

HEATING

Combination (Capacity Index)					Combination (Total)	Combination (%)	Outdoor Temperature (°C, DB)	Indoor Temperature(°C, WB)													
								14		16		18		20		21		22		24	
								TC(kW)	PI(kW)	TC(kW)	PI(kW)	TC(kW)	PI(kW)	TC(kW)	PI(kW)	TC(kW)	PI(kW)	TC(kW)	PI(kW)	TC(kW)	PI(kW)
2000	2000				4000	59%	-15	2.52	0.97	2.44	0.98	2.37	1.00	2.34	1.00	2.31	1.01	2.26	1.02	2.21	1.03
							-10	3.02	1.02	2.93	1.04	2.86	1.05	2.82	1.06	2.79	1.06	2.74	1.07	2.69	1.08
							-5	3.52	1.07	3.43	1.09	3.35	1.10	3.31	1.11	3.28	1.11	3.22	1.13	3.16	1.14
							0	4.02	1.12	3.92	1.14	3.84	1.15	3.80	1.16	3.76	1.17	3.70	1.18	3.64	1.19
							2	4.22	1.14	4.12	1.16	4.04	1.17	4.00	1.18	3.96	1.19	3.89	1.20	3.83	1.21
							7	4.62	1.18	4.52	1.20	4.43	1.21	4.40	1.22	4.35	1.23	4.28	1.24	4.21	1.25
							10	5.02	1.22	4.92	1.24	4.82	1.25	4.78	1.26	4.74	1.27	4.66	1.28	4.60	1.30
							15	5.52	1.27	5.41	1.29	5.32	1.31	5.27	1.31	5.23	1.32	5.15	1.34	5.08	1.35
2000	2500				4500	66%	-15	3.15	1.18	3.05	1.20	2.96	1.22	2.92	1.22	2.89	1.23	2.82	1.24	2.77	1.25
							-10	3.77	1.25	3.67	1.27	3.57	1.28	3.53	1.29	3.49	1.30	3.42	1.31	3.36	1.32
							-5	4.40	1.31	4.29	1.33	4.19	1.35	4.14	1.35	4.10	1.36	4.02	1.37	3.96	1.39
							0	5.02	1.37	4.90	1.39	4.80	1.41	4.75	1.42	4.71	1.42	4.62	1.44	4.55	1.45
							2	5.27	1.39	5.15	1.41	5.05	1.43	5.00	1.44	4.95	1.45	4.86	1.47	4.79	1.48
							7	5.77	1.44	5.65	1.46	5.54	1.48	5.50	1.49	5.44	1.50	5.35	1.52	5.27	1.53
							10	6.27	1.49	6.15	1.51	6.03	1.53	5.98	1.54	5.92	1.55	5.83	1.57	5.75	1.58
							15	6.90	1.55	6.77	1.57	6.65	1.59	6.59	1.60	6.53	1.61	6.44	1.63	6.35	1.65
2000	3500				5500	81%	-15	3.55	1.33	3.44	1.35	3.34	1.36	3.29	1.37	3.25	1.38	3.18	1.39	3.12	1.40
							-10	4.25	1.40	4.13	1.42	4.03	1.44	3.98	1.45	3.94	1.45	3.86	1.47	3.79	1.48
							-5	4.95	1.47	4.83	1.49	4.72	1.51	4.67	1.52	4.62	1.53	4.53	1.54	4.46	1.55
							0	5.66	1.53	5.53	1.56	5.41	1.58	5.36	1.59	5.30	1.60	5.21	1.61	5.13	1.63
							2	5.94	1.56	5.81	1.59	5.69	1.61	5.63	1.62	5.58	1.63	5.48	1.64	5.40	1.66
							7	6.51	1.62	6.37	1.64	6.24	1.66	6.20	1.67	6.13	1.68	6.03	1.70	5.94	1.72
							10	7.07	1.67	6.93	1.69	6.80	1.72	6.74	1.73	6.68	1.74	6.57	1.76	6.48	1.77
							15	7.78	1.74	7.63	1.76	7.49	1.79	7.43	1.80	7.37	1.81	7.25	1.83	7.15	1.85
2000	5000				7000	103%	-15	4.47	1.58	4.33	1.61	4.20	1.63	4.14	1.64	4.09	1.64	4.00	1.66	3.92	1.67
							-10	5.35	1.66	5.20	1.69	5.07	1.71	5.01	1.72	4.95	1.73	4.85	1.75	4.77	1.76
							-5	6.23	1.75	6.08	1.77	5.94	1.80	5.87	1.81	5.81	1.82	5.70	1.84	5.61	1.85
							0	7.12	1.83	6.96	1.86	6.81	1.88	6.74	1.89	6.67	1.90	6.56	1.92	6.45	1.94
							2	7.47	1.86	7.31	1.89	7.15	1.91	7.08	1.93	7.02	1.94	6.90	1.96	6.79	1.97
							7	8.19	1.93	8.01	1.95	7.85	1.98	7.80	1.99	7.71	2.00	7.58	2.03	7.47	2.04
							10	8.90	1.99	8.72	2.02	8.55	2.05	8.47	2.06	8.40	2.07	8.27	2.09	8.15	2.11
							15	9.79	2.07	9.60	2.10	9.43	2.13	9.34	2.14	9.27	2.16	9.13	2.18	9.00	2.20
2500	2500				5000	74%	-15	3.78	1.50	3.66	1.52	3.55	1.54	3.51	1.55	3.46	1.56	3.38	1.58	3.32	1.59
							-10	4.53	1.58	4.40	1.60	4.29	1.63	4.24	1.64	4.19	1.64	4.10	1.66	4.03	1.67
							-5	5.27	1.66	5.14	1.68	5.02	1.71	4.97	1.72	4.92	1.73	4.83	1.74	4.75	1.76
							0	6.02	1.74	5.89	1.76	5.76	1.79	5.70	1.80	5.65	1.81	5.55	1.83	5.46	1.84
							2	6.32	1.77	6.18	1.79	6.05	1.82	5.99	1.83	5.94	1.84	5.84	1.86	5.75	1.88
							7	6.93	1.83	6.78	1.86	6.64	1.88	6.60	1.89	6.52	1.90	6.42	1.92	6.32	1.94
							10	7.53	1.89	7.37	1.92	7.24	1.94	7.17	1.96	7.11	1.97	7.00	1.99	6.90	2.01
							15	8.28	1.97	8.12	2.00	7.98	2.02	7.91	2.03	7.84	2.05	7.72	2.07	7.62	2.09
2500	3500				6000	88%	-15	4.18	1.55	4.05	1.57	3.93	1.59	3.88	1.60	3.83	1.61	3.74	1.63	3.67	1.64
							-10	5.01	1.63	4.87	1.66	4.74	1.68	4.69	1.69	4.63	1.70	4.54	1.71	4.46	1.73
							-5	5.83	1.71	5.69	1.74	5.56	1.76	5.50	1.77	5.44	1.78	5.34	1.80	5.25	1.81
							0	6.66	1.79	6.51	1.82	6.37	1.84	6.31	1.85	6.25	1.86	6.14	1.88	6.04	1.90
							2	7.00	1.82	6.84	1.85	6.70	1.88	6.63	1.89	6.57	1.90	6.46	1.92	6.36	1.94
							7	7.66	1.89	7.50	1.92	7.35	1.94	7.30	1.95	7.22	1.96	7.10	1.99	6.99	2.00
							10	8.33	1.95	8.16	1.98	8.00	2.01	7.93	2.02	7.86	2.03	7.74	2.05	7.63	2.07
							15	9.16	2.03	8.98	2.06	8.82	2.09	8.75	2.10	8.67	2.11	8.54	2.14	8.42	2.16
2500	5000				7500	110%	-15	4.47	1.62	4.33	1.65	4.20	1.67	4.14	1.68	4.09	1.69	4.00	1.70	3.92	1.72
							-10	5.35	1.71	5.20	1.73	5.07	1.75	5.01	1.77	4.95	1.77	4.85	1.79	4.77	1.81
							-5	6.23	1.79	6.08	1.82	5.94	1.84	5.87	1.85	5.81	1.86	5.70	1.88	5.61	1.90
							0	7.12	1.87	6.96	1.90	6.81	1.93	6.74	1.94	6.67	1.95	6.56	1.97	6.45	1.99
							2	7.47	1.91	7.31	1.94	7.15	1.96	7.08	1.97	7.02	1.99	6.90	2.01	6.79	2.02
							7	8.19	1.97	8.01	2.00	7.85	2.03	7.80	2.04	7.71	2.05	7.58	2.08	7.47	2.10
							10	8.90	2.04	8.72	2.07	8.55	2.10	8.47	2.11	8.40	2.12	8.27	2.15	8.15	2.17
							15	9.79	2.12	9.60	2.15	9.43	2.18	9.34	2.20	9.27	2.21	9.13	2.23	9.00	2.26
3500	3500				7000	103%	-15	4.47	1.58	4.33	1.61	4.20	1.63	4.14	1.64	4.09	1.64	4.00	1.66	3.92	1.67
							-10	5.35	1.66	5.20	1.69	5.07	1.71	5.01	1.72	4.95	1.73	4.85	1.75	4.77	1.76
							-5	6.23	1.75	6.08	1.77	5.94	1.80	5.87	1.81	5.81	1.82	5.70	1.84	5.61	1.85
							0	7.12	1.83	6.96	1.86	6.81	1.88	6.74	1.89	6.67	1.90	6.56	1.92	6.45	1.94
							2	7.47	1.86	7.31	1.89	7.15	1.91	7.08	1.93	7.02	1.94	6.90	1.96	6.79	1.97
							7	8.19	1.93	8.01	1.95	7.85	1.98	7.80	1.99	7.71	2.00	7.58	2.03	7.47	2.04
							10	8.90	1.99	8.72	2.02	8.55	2.05	8.47	2.06	8.40	2.07	8.27	2.09	8.15	2.11
							15	9.79	2.07	9.60	2.10	9.43	2.13	9.34	2.14	9.27	2.16	9.13	2.18	9.00	2.20
3500	5000				8500	125%	-15	4.58	1.66	4.44	1.69	4.31	1.71	4.25	1.72	4.20	1.73	4.10	1.74	4.02	1.76
							-10	5.49	1.75	5.33	1.77	5.20	1.80	5.14	1.81	5.08	1.82	4.97	1.84	4.89	1.85
							-5	6.39	1.83	6.23	1.86	6.09	1.89	6.02	1.90	5.96	1.91	5.85	1.93	5.75	1.94
							0	7.30	1.92	7.13	1.95	6.98	1.98	6.91	1.99	6.84	2.00	6.72	2.02	6.62	2.04
							2	7.67	1.95	7.49	1.98	7.34	2.01	7.27	2.02	7.20	2.03	7.07	2.06	6.97	2.07
							7	8.40	2.02	8.22	2.05	8.05	2.08	8.00	2.09	7.91	2.11	7.78	2.13	7.66	2.15
							10	9.12	2.09	8.94	2.12	8.77	2.15	8.69	2.16	8.62	2.18	8.48	2.20	8.36	2.22
							15	10.04	2.17	9.84	2.21	9.67	2.24	9.58	2.25	9.51	2.26	9.36	2.29	9.23	2.31

* All figures comply with EN14511

1. Cooling capacity is based on 27°CDB / 19°CWB (indoor temperature), 35°CDB (outdoor temperature).
2. Heating capacity is based on 20°CDB (indoor temperature), 7°CDB/6°CWB (outdoor temperature).
3. Capacities are based on the following conditions : - Corresponding refrigerant piping length : 5m / - Level difference : 0m
4. The total ability of connected a indoor unit is up to 11kW
5. It is impossible to connect the indoor unit for one room only.
6. This data is reference data for temperature capacity trend.

4 AJ068FCJ3EH

1) Cooling

HEATING	Combination (Capacity Index)					Combination (Total)	Combination (%)	Outdoor Temperature (°C, DB)	Indoor Temperature(°C, WB)															
									14		16		18		20		21		22		24			
									TC(kW)	PI(kW)	TC(kW)	PI(kW)	TC(kW)	PI(kW)	TC(kW)	PI(kW)	TC(kW)	PI(kW)	TC(kW)	PI(kW)	TC(kW)	PI(kW)	TC(kW)	PI(kW)
	5000	5000				10000	147%	-15	4.58	1.65	4.44	1.68	4.31	1.70	4.25	1.71	4.20	1.72	4.10	1.74	4.02	1.75
								-10	5.49	1.74	5.33	1.77	5.20	1.79	5.14	1.80	5.08	1.81	4.97	1.83	4.89	1.84
								-5	6.39	1.83	6.23	1.85	6.09	1.88	6.02	1.89	5.96	1.90	5.85	1.92	5.75	1.94
								0	7.30	1.91	7.13	1.94	6.98	1.97	6.91	1.98	6.84	1.99	6.72	2.01	6.62	2.03
								2	7.67	1.95	7.49	1.97	7.34	2.00	7.27	2.01	7.20	2.02	7.07	2.05	6.97	2.06
								7	8.40	2.01	8.22	2.04	8.05	2.07	8.00	2.08	7.91	2.10	7.78	2.12	7.66	2.14
								10	9.12	2.08	8.94	2.11	8.77	2.14	8.69	2.15	8.62	2.17	8.48	2.19	8.36	2.21
								15	10.04	2.16	9.84	2.20	9.67	2.23	9.58	2.24	9.51	2.25	9.36	2.28	9.23	2.30
	2000	2000	2000			6000	88%	-15	3.78	1.40	3.66	1.42	3.55	1.44	3.51	1.45	3.46	1.45	3.38	1.47	3.32	1.48
								-10	4.53	1.47	4.40	1.49	4.29	1.51	4.24	1.52	4.19	1.53	4.10	1.55	4.03	1.56
								-5	5.27	1.55	5.14	1.57	5.02	1.59	4.97	1.60	4.92	1.61	4.83	1.62	4.75	1.64
								0	6.02	1.62	5.89	1.64	5.76	1.66	5.70	1.67	5.65	1.68	5.55	1.70	5.46	1.72
								2	6.32	1.65	6.18	1.67	6.05	1.69	5.99	1.70	5.94	1.71	5.84	1.73	5.75	1.75
								7	6.93	1.70	6.78	1.73	6.64	1.75	6.60	1.76	6.52	1.77	6.42	1.79	6.32	1.81
								10	7.53	1.76	7.37	1.79	7.24	1.81	7.17	1.82	7.11	1.83	7.00	1.85	6.90	1.87
								15	8.28	1.83	8.12	1.86	7.98	1.88	7.91	1.89	7.84	1.91	7.72	1.93	7.62	1.95
	2000	2000	2500			6500	96%	-15	4.41	1.45	4.27	1.48	4.15	1.50	4.09	1.50	4.04	1.51	3.95	1.53	3.87	1.54
								-10	5.28	1.53	5.13	1.55	5.00	1.57	4.94	1.58	4.89	1.59	4.79	1.61	4.70	1.62
								-5	6.15	1.61	6.00	1.63	5.86	1.65	5.80	1.66	5.74	1.67	5.63	1.69	5.54	1.70
								0	7.03	1.68	6.87	1.71	6.72	1.73	6.65	1.74	6.59	1.75	6.47	1.77	6.37	1.78
								2	7.38	1.71	7.21	1.74	7.06	1.76	6.99	1.77	6.93	1.78	6.81	1.80	6.71	1.82
								7	8.08	1.77	7.91	1.80	7.75	1.82	7.70	1.83	7.61	1.84	7.49	1.86	7.38	1.88
								10	8.78	1.83	8.60	1.86	8.44	1.88	8.37	1.89	8.29	1.91	8.16	1.93	8.05	1.94
								15	9.66	1.90	9.48	1.93	9.30	1.96	9.22	1.97	9.15	1.98	9.01	2.00	8.88	2.02
	2000	2000	3500			7500	110%	-15	4.58	1.53	4.44	1.55	4.31	1.57	4.25	1.58	4.20	1.59	4.10	1.60	4.02	1.62
								-10	5.49	1.61	5.33	1.63	5.20	1.65	5.14	1.66	5.08	1.67	4.97	1.69	4.89	1.70
								-5	6.39	1.69	6.23	1.71	6.09	1.73	6.02	1.74	5.96	1.75	5.85	1.77	5.75	1.79
								0	7.30	1.76	7.13	1.79	6.98	1.81	6.91	1.83	6.84	1.84	6.72	1.85	6.62	1.87
								2	7.67	1.80	7.49	1.82	7.34	1.85	7.27	1.86	7.20	1.87	7.07	1.89	6.97	1.91
								7	8.40	1.86	8.22	1.89	8.05	1.91	8.00	1.92	7.91	1.93	7.78	1.95	7.66	1.97
								10	9.12	1.92	8.94	1.95	8.77	1.97	8.69	1.99	8.62	2.00	8.48	2.02	8.36	2.04
								15	10.04	2.00	9.84	2.03	9.67	2.05	9.58	2.07	9.51	2.08	9.36	2.10	9.23	2.12
	2000	2000	5000			9000	132%	-15	4.58	1.56	4.44	1.58	4.31	1.60	4.25	1.61	4.20	1.62	4.10	1.64	4.02	1.65
								-10	5.49	1.64	5.33	1.66	5.20	1.69	5.14	1.70	5.08	1.71	4.97	1.72	4.89	1.74
								-5	6.39	1.72	6.23	1.75	6.09	1.77	6.02	1.78	5.96	1.79	5.85	1.81	5.75	1.82
								0	7.30	1.80	7.13	1.83	6.98	1.85	6.91	1.86	6.84	1.87	6.72	1.89	6.62	1.91
								2	7.67	1.83	7.49	1.86	7.34	1.89	7.27	1.90	7.20	1.91	7.07	1.93	6.97	1.95
								7	8.40	1.90	8.22	1.92	8.05	1.95	8.00	1.96	7.91	1.97	7.78	2.00	7.66	2.01
								10	9.12	1.96	8.94	1.99	8.77	2.02	8.69	2.03	8.62	2.04	8.48	2.06	8.36	2.08
								15	10.04	2.04	9.84	2.07	9.67	2.10	9.58	2.11	9.51	2.12	9.36	2.15	9.23	2.17
	2000	2500	2500			7000	103%	-15	4.58	1.49	4.44	1.52	4.31	1.54	4.25	1.55	4.20	1.55	4.10	1.57	4.02	1.58
								-10	5.49	1.57	5.33	1.60	5.20	1.62	5.14	1.63	5.08	1.64	4.97	1.65	4.89	1.67
								-5	6.39	1.65	6.23	1.67	6.09	1.70	6.02	1.71	5.96	1.72	5.85	1.73	5.75	1.75
								0	7.30	1.73	7.13	1.75	6.98	1.78	6.91	1.79	6.84	1.80	6.72	1.82	6.62	1.83
								2	7.67	1.76	7.49	1.78	7.34	1.81	7.27	1.82	7.20	1.83	7.07	1.85	6.97	1.87
								7	8.40	1.82	8.22	1.85	8.05	1.87	8.00	1.88	7.91	1.89	7.78	1.91	7.66	1.93
								10	9.12	1.88	8.94	1.91	8.77	1.93	8.69	1.95	8.62	1.96	8.48	1.98	8.36	2.00
								15	10.04	1.96	9.84	1.98	9.67	2.01	9.58	2.02	9.51	2.04	9.36	2.06	9.23	2.08
	2000	2500	3500			8000	118%	-15	4.58	1.52	4.44	1.54	4.31	1.56	4.25	1.57	4.20	1.58	4.10	1.59	4.02	1.61
								-10	5.49	1.60	5.33	1.62	5.20	1.64	5.14	1.65	5.08	1.66	4.97	1.68	4.89	1.69
								-5	6.39	1.68	6.23	1.70	6.09	1.72	6.02	1.73	5.96	1.74	5.85	1.76	5.75	1.78
								0	7.30	1.76	7.13	1.78	6.98	1.80	6.91	1.82	6.84	1.83	6.72	1.85	6.62	1.86
								2	7.67	1.79	7.49	1.81	7.34	1.84	7.27	1.85	7.20	1.86	7.07	1.88	6.97	1.90
								7	8.40	1.85	8.22	1.88	8.05	1.90	8.00	1.91	7.91	1.92	7.78	1.94	7.66	1.96
								10	9.12	1.91	8.94	1.94	8.77	1.96	8.69	1.98	8.62	1.99	8.48	2.01	8.36	2.03
								15	10.04	1.99	9.84	2.02	9.67	2.04	9.58	2.06	9.51	2.07	9.36	2.09	9.23	2.11
	2000	2500	5000			9500	140%	-15	4.58	1.53	4.44	1.55	4.31	1.57	4.25	1.58	4.20	1.59	4.10	1.60	4.02	1.62
								-10	5.49	1.61	5.33	1.63	5.20	1.65	5.14	1.66	5.08	1.67	4.97	1.69	4.89	1.70
								-5	6.39	1.69	6.23	1.71	6.09	1.73	6.02	1.74	5.96	1.75	5.85	1.77	5.75	1.79
								0	7.30	1.76	7.13	1.79	6.98	1.81	6.91	1.83	6.84	1.84	6.72	1.85	6.62	1.87
								2	7.67	1.80	7.49	1.82	7.34	1.85	7.27	1.86	7.20	1.87	7.07	1.89	6.97	1.91
								7	8.40	1.86	8.22	1.89	8.05	1.91	8.00	1.92	7.91	1.93	7.78	1.95	7.66	1.97
								10	9.12	1.92	8.94	1.95	8.77	1.97	8.69	1.99	8.62	2.00	8.48	2.02	8.36	2.04
								15	10.04	2.00	9.84	2.03	9.67	2.05	9.58	2.07	9.51	2.08	9.36	2.10	9.23	2.12

* All figures comply with EN14511

1. Cooling capacity is based on 27°CDB / 19°CWB (indoor temperature), 35°CDB (outdoor temperature).
2. Heating capacity is based on 20°CDB (indoor temperature), 7°CDB/6°CWB (outdoor temperature).
3. Capacities are based on the following conditions : - Corresponding refrigerant piping length : 5m / - Level difference : 0m
4. The total ability of connected a indoor unit is up to 11kW
5. It is impossible to connect the indoor unit for one room only.
6. This data is reference data for temperature capacity trend.

2) Heating

HEATING

Combination (Capacity Index)					Combination (Total)	Combination (%)	Outdoor Temperature (°C, DB)	Indoor Temperature(°C, WB)													
								14		16		18		20		21		22		24	
								TC(kW)	PI(kW)	TC(kW)	PI(kW)	TC(kW)	PI(kW)	TC(kW)	PI(kW)	TC(kW)	PI(kW)	TC(kW)	PI(kW)	TC(kW)	PI(kW)
2000	3500	3500			9000	132%	-15	4.58	1.56	4.44	1.58	4.31	1.60	4.25	1.61	4.20	1.62	4.10	1.64	4.02	1.65
							-10	5.49	1.64	5.33	1.66	5.20	1.69	5.14	1.70	5.08	1.71	4.97	1.72	4.89	1.74
							-5	6.39	1.72	6.23	1.75	6.09	1.77	6.02	1.78	5.96	1.79	5.85	1.81	5.75	1.82
							0	7.30	1.80	7.13	1.83	6.98	1.85	6.91	1.86	6.84	1.87	6.72	1.89	6.62	1.91
							2	7.67	1.83	7.49	1.86	7.34	1.89	7.27	1.90	7.20	1.91	7.07	1.93	6.97	1.95
							7	8.40	1.90	8.22	1.92	8.05	1.95	8.00	1.96	7.91	1.97	7.78	2.00	7.66	2.01
							10	9.12	1.96	8.94	1.99	8.77	2.02	8.69	2.03	8.62	2.04	8.48	2.06	8.36	2.08
							15	10.04	2.04	9.84	2.07	9.67	2.10	9.58	2.11	9.51	2.12	9.36	2.15	9.23	2.17
2000	3500	5000			10500	154%	-15	4.58	1.55	4.44	1.57	4.31	1.59	4.25	1.60	4.20	1.61	4.10	1.63	4.02	1.64
							-10	5.49	1.63	5.33	1.66	5.20	1.68	5.14	1.69	5.08	1.70	4.97	1.71	4.89	1.73
							-5	6.39	1.71	6.23	1.74	6.09	1.76	6.02	1.77	5.96	1.78	5.85	1.80	5.75	1.81
							0	7.30	1.79	7.13	1.82	6.98	1.84	6.91	1.85	6.84	1.86	6.72	1.88	6.62	1.90
							2	7.67	1.82	7.49	1.85	7.34	1.88	7.27	1.89	7.20	1.90	7.07	1.92	6.97	1.94
							7	8.40	1.89	8.22	1.92	8.05	1.94	8.00	1.95	7.91	1.96	7.78	1.99	7.66	2.00
							10	9.12	1.95	8.94	1.98	8.77	2.01	8.69	2.02	8.62	2.03	8.48	2.05	8.36	2.07
							15	10.04	2.03	9.84	2.06	9.67	2.09	9.58	2.10	9.51	2.11	9.36	2.14	9.23	2.16
2500	2500	2500			7500	110%	-15	4.58	1.53	4.44	1.56	4.31	1.58	4.25	1.59	4.20	1.60	4.10	1.61	4.02	1.62
							-10	5.49	1.61	5.33	1.64	5.20	1.66	5.14	1.67	5.08	1.68	4.97	1.70	4.89	1.71
							-5	6.39	1.69	6.23	1.72	6.09	1.74	6.02	1.75	5.96	1.76	5.85	1.78	5.75	1.80
							0	7.30	1.77	7.13	1.80	6.98	1.82	6.91	1.83	6.84	1.85	6.72	1.86	6.62	1.88
							2	7.67	1.80	7.49	1.83	7.34	1.86	7.27	1.87	7.20	1.88	7.07	1.90	6.97	1.92
							7	8.40	1.87	8.22	1.90	8.05	1.92	8.00	1.93	7.91	1.94	7.78	1.96	7.66	1.98
							10	9.12	1.93	8.94	1.96	8.77	1.99	8.69	2.00	8.62	2.01	8.48	2.03	8.36	2.05
							15	10.04	2.01	9.84	2.04	9.67	2.07	9.58	2.08	9.51	2.09	9.36	2.11	9.23	2.13
2500	2500	3500			8500	125%	-15	4.58	1.52	4.44	1.54	4.31	1.56	4.25	1.57	4.20	1.58	4.10	1.59	4.02	1.61
							-10	5.49	1.60	5.33	1.62	5.20	1.64	5.14	1.65	5.08	1.66	4.97	1.68	4.89	1.69
							-5	6.39	1.68	6.23	1.70	6.09	1.72	6.02	1.73	5.96	1.74	5.85	1.76	5.75	1.78
							0	7.30	1.76	7.13	1.78	6.98	1.80	6.91	1.82	6.84	1.83	6.72	1.85	6.62	1.86
							2	7.67	1.79	7.49	1.81	7.34	1.84	7.27	1.85	7.20	1.86	7.07	1.88	6.97	1.90
							7	8.40	1.85	8.22	1.88	8.05	1.90	8.00	1.91	7.91	1.92	7.78	1.94	7.66	1.96
							10	9.12	1.91	8.94	1.94	8.77	1.96	8.69	1.98	8.62	1.99	8.48	2.01	8.36	2.03
							15	10.04	1.99	9.84	2.02	9.67	2.04	9.58	2.06	9.51	2.07	9.36	2.09	9.23	2.11
2500	2500	5000			10000	147%	-15	4.58	1.55	4.44	1.57	4.31	1.59	4.25	1.60	4.20	1.61	4.10	1.63	4.02	1.64
							-10	5.49	1.63	5.33	1.66	5.20	1.68	5.14	1.69	5.08	1.70	4.97	1.71	4.89	1.73
							-5	6.39	1.71	6.23	1.74	6.09	1.76	6.02	1.77	5.96	1.78	5.85	1.80	5.75	1.81
							0	7.30	1.79	7.13	1.82	6.98	1.84	6.91	1.85	6.84	1.86	6.72	1.88	6.62	1.90
							2	7.67	1.82	7.49	1.85	7.34	1.88	7.27	1.89	7.20	1.90	7.07	1.92	6.97	1.94
							7	8.40	1.89	8.22	1.92	8.05	1.94	8.00	1.95	7.91	1.96	7.78	1.99	7.66	2.00
							10	9.12	1.95	8.94	1.98	8.77	2.01	8.69	2.02	8.62	2.03	8.48	2.05	8.36	2.07
							15	10.04	2.03	9.84	2.06	9.67	2.09	9.58	2.10	9.51	2.11	9.36	2.14	9.23	2.16
2500	3500	3500			9500	140%	-15	4.58	1.53	4.44	1.56	4.31	1.58	4.25	1.59	4.20	1.60	4.10	1.61	4.02	1.62
							-10	5.49	1.61	5.33	1.64	5.20	1.66	5.14	1.67	5.08	1.68	4.97	1.70	4.89	1.71
							-5	6.39	1.69	6.23	1.72	6.09	1.74	6.02	1.75	5.96	1.76	5.85	1.78	5.75	1.80
							0	7.30	1.77	7.13	1.80	6.98	1.82	6.91	1.83	6.84	1.85	6.72	1.86	6.62	1.88
							2	7.67	1.80	7.49	1.83	7.34	1.86	7.27	1.87	7.20	1.88	7.07	1.90	6.97	1.92
							7	8.40	1.87	8.22	1.90	8.05	1.92	8.00	1.93	7.91	1.94	7.78	1.96	7.66	1.98
							10	9.12	1.93	8.94	1.96	8.77	1.99	8.69	2.00	8.62	2.01	8.48	2.03	8.36	2.05
							15	10.04	2.01	9.84	2.04	9.67	2.07	9.58	2.08	9.51	2.09	9.36	2.11	9.23	2.13
2500	3500	5000			11000	162%	-15	4.58	1.57	4.44	1.60	4.31	1.62	4.25	1.63	4.20	1.64	4.10	1.65	4.02	1.67
							-10	5.49	1.66	5.33	1.68	5.20	1.70	5.14	1.71	5.08	1.72	4.97	1.74	4.89	1.75
							-5	6.39	1.74	6.23	1.76	6.09	1.79	6.02	1.80	5.96	1.81	5.85	1.83	5.75	1.84
							0	7.30	1.82	7.13	1.85	6.98	1.87	6.91	1.88	6.84	1.89	6.72	1.91	6.62	1.93
							2	7.67	1.85	7.49	1.88	7.34	1.90	7.27	1.92	7.20	1.93	7.07	1.95	6.97	1.96
							7	8.40	1.92	8.22	1.94	8.05	1.97	8.00	1.98	7.91	1.99	7.78	2.02	7.66	2.03
							10	9.12	1.98	8.94	2.01	8.77	2.04	8.69	2.05	8.62	2.06	8.48	2.08	8.36	2.10
							15	10.04	2.06	9.84	2.09	9.67	2.12	9.58	2.13	9.51	2.14	9.36	2.17	9.23	2.19
3500	3500	3500			10500	154%	-15	4.58	1.52	4.44	1.54	4.31	1.56	4.25	1.57	4.20	1.58	4.10	1.59	4.02	1.61
							-10	5.49	1.60	5.33	1.62	5.20	1.64	5.14	1.65	5.08	1.66	4.97	1.68	4.89	1.69
							-5	6.39	1.68	6.23	1.70	6.09	1.72	6.02	1.73	5.96	1.74	5.85	1.76	5.75	1.78
							0	7.30	1.76	7.13	1.78	6.98	1.80	6.91	1.82	6.84	1.83	6.72	1.85	6.62	1.86
							2	7.67	1.79	7.49	1.81	7.34	1.84	7.27	1.85	7.20	1.86	7.07	1.88	6.97	1.90
							7	8.40	1.85	8.22	1.88	8.05	1.90	8.00	1.91	7.91	1.92	7.78	1.94	7.66	1.96
							10	9.12	1.91	8.94	1.94	8.77	1.96	8.69	1.98	8.62	1.99	8.48	2.01	8.36	2.03
							15	10.04	1.99	9.84	2.02	9.67	2.04	9.58	2.06	9.51	2.07	9.36	2.09	9.23	2.11

* All figures comply with EN14511

1. Cooling capacity is based on 27°CDB / 19°CWB (indoor temperature), 35°CDB (outdoor temperature).
2. Heating capacity is based on 20°CDB (indoor temperature), 7°CDB/6°CWB (outdoor temperature).
3. Capacities are based on the following conditions : - Corresponding refrigerant piping length : 5m / - Level difference : 0m
4. The total ability of connected a indoor unit is up to 11kW
5. It is impossible to connect the indoor unit for one room only.
6. This data is reference data for temperature capacity trend.

5 AJ070FCJ4EH

1) Cooling

COOLING

Combination (Capacity Index)	Combination (Total)	Combination (%)	Outdoor Temperature (°C, DB)	Indoor Temperature(°C, WB)													
				14		16		18		19		20		22		24	
				TC(kW)	PI(kW)	TC(kW)	PI(kW)	TC(kW)	PI(kW)	TC(kW)	PI(kW)	TC(kW)	PI(kW)	TC(kW)	PI(kW)	TC(kW)	PI(kW)
2000	2000	29%	10	1.76	0.45	2.55	0.50	2.66	0.55	2.71	0.56	2.76	0.58	2.87	0.61	2.98	0.63
			12	1.76	0.47	2.51	0.52	2.62	0.56	2.67	0.58	2.72	0.60	2.83	0.62	2.94	0.64
			14	1.76	0.49	2.47	0.54	2.57	0.58	2.63	0.60	2.68	0.61	2.79	0.64	2.90	0.66
			16	1.76	0.51	2.43	0.56	2.53	0.60	2.59	0.61	2.64	0.63	2.75	0.65	2.85	0.67
			18	1.76	0.54	2.39	0.58	2.49	0.62	2.54	0.63	2.60	0.65	2.70	0.67	2.81	0.68
			20	1.76	0.56	2.35	0.60	2.45	0.63	2.50	0.65	2.56	0.66	2.66	0.68	2.77	0.69
			21	1.76	0.57	2.33	0.61	2.43	0.64	2.48	0.66	2.54	0.67	2.64	0.69	2.75	0.70
			23	1.76	0.59	2.29	0.63	2.39	0.66	2.44	0.68	2.49	0.69	2.60	0.71	2.70	0.72
			25	1.76	0.61	2.25	0.65	2.35	0.68	2.40	0.69	2.45	0.70	2.56	0.72	2.66	0.73
			27	1.76	0.64	2.21	0.67	2.31	0.70	2.36	0.71	2.41	0.72	2.51	0.74	2.62	0.74
			29	1.76	0.66	2.17	0.69	2.27	0.72	2.32	0.73	2.37	0.74	2.47	0.75	2.58	0.76
			31	1.76	0.68	2.13	0.72	2.23	0.74	2.28	0.75	2.33	0.76	2.43	0.77	2.53	0.77
			33	1.76	0.71	2.09	0.74	2.19	0.76	2.24	0.77	2.29	0.78	2.39	0.79	2.49	0.79
			35	1.76	0.73	2.05	0.76	2.15	0.78	2.20	0.78	2.25	0.80	2.35	0.80	2.45	0.80
			37	1.76	0.75	2.01	0.78	2.11	0.80	2.16	0.81	2.21	0.82	2.31	0.82	2.41	0.82
			39	1.76	0.78	1.97	0.81	2.07	0.82	2.12	0.83	2.17	0.84	2.27	0.84	2.37	0.84
			42	1.74	0.82	1.91	0.84	2.01	0.86	2.06	0.86	2.11	0.87	2.21	0.87	2.30	0.86
			44	1.65	0.84	1.88	0.86	1.97	0.88	2.02	0.88	2.07	0.89	2.17	0.89	2.26	0.88
			46	1.61	0.87	1.84	0.89	1.93	0.90	1.98	0.91	2.03	0.91	2.12	0.91	2.22	0.90
2500	2500	36%	10	2.00	0.49	2.90	0.54	3.02	0.59	3.08	0.61	3.14	0.63	3.26	0.66	3.39	0.68
			12	2.00	0.51	2.85	0.56	2.97	0.61	3.03	0.63	3.09	0.64	3.22	0.67	3.34	0.69
			14	2.00	0.53	2.80	0.58	2.93	0.62	2.99	0.64	3.05	0.66	3.17	0.69	3.29	0.71
			16	2.00	0.55	2.76	0.60	2.88	0.64	2.94	0.66	3.00	0.68	3.12	0.70	3.24	0.72
			18	2.00	0.58	2.71	0.62	2.83	0.66	2.89	0.68	2.95	0.69	3.07	0.72	3.19	0.73
			20	2.00	0.60	2.67	0.65	2.79	0.68	2.85	0.70	2.90	0.71	3.02	0.73	3.14	0.75
			21	2.00	0.61	2.64	0.66	2.76	0.69	2.82	0.71	2.88	0.72	3.00	0.74	3.12	0.76
			23	2.00	0.64	2.60	0.68	2.72	0.71	2.78	0.73	2.83	0.74	2.95	0.76	3.07	0.77
			25	2.00	0.66	2.55	0.70	2.67	0.73	2.73	0.75	2.79	0.76	2.91	0.78	3.02	0.79
			27	2.00	0.68	2.51	0.72	2.62	0.75	2.68	0.77	2.74	0.78	2.86	0.79	2.98	0.80
			29	2.00	0.71	2.46	0.75	2.58	0.78	2.64	0.79	2.69	0.80	2.81	0.81	2.93	0.82
			31	2.00	0.73	2.42	0.77	2.53	0.80	2.59	0.81	2.65	0.82	2.76	0.83	2.88	0.83
			33	2.00	0.76	2.37	0.79	2.49	0.82	2.54	0.83	2.60	0.84	2.72	0.85	2.83	0.85
			35	2.00	0.79	2.33	0.82	2.44	0.84	2.50	0.84	2.56	0.86	2.67	0.87	2.78	0.87
			37	2.00	0.81	2.29	0.84	2.40	0.86	2.45	0.87	2.51	0.88	2.62	0.89	2.74	0.88
			39	2.00	0.84	2.24	0.87	2.35	0.89	2.41	0.90	2.46	0.90	2.58	0.91	2.69	0.90
			42	1.98	0.88	2.18	0.91	2.29	0.92	2.34	0.93	2.40	0.93	2.51	0.93	2.62	0.93
			44	1.88	0.91	2.13	0.93	2.24	0.95	2.30	0.95	2.35	0.96	2.46	0.96	2.57	0.95
			46	1.83	0.94	2.09	0.96	2.20	0.97	2.25	0.98	2.30	0.98	2.41	0.98	2.53	0.97
3500	3500	50%	10	2.80	0.65	4.06	0.73	4.23	0.79	4.31	0.82	4.40	0.84	4.57	0.88	4.74	0.92
			12	2.80	0.68	3.99	0.75	4.16	0.82	4.25	0.84	4.33	0.87	4.50	0.90	4.68	0.93
			14	2.80	0.71	3.93	0.78	4.10	0.84	4.18	0.87	4.26	0.89	4.44	0.92	4.61	0.95
			16	2.80	0.74	3.86	0.81	4.03	0.87	4.11	0.89	4.20	0.91	4.37	0.95	4.54	0.97
			18	2.80	0.78	3.80	0.84	3.96	0.89	4.05	0.91	4.13	0.93	4.30	0.97	4.47	0.99
			20	2.80	0.81	3.73	0.87	3.90	0.92	3.98	0.94	4.07	0.96	4.23	0.99	4.40	1.01
			21	2.80	0.82	3.70	0.88	3.87	0.93	3.95	0.95	4.03	0.97	4.20	1.00	4.37	1.02
			23	2.80	0.85	3.64	0.91	3.80	0.96	3.89	0.98	3.97	1.00	4.13	1.02	4.30	1.04
			25	2.80	0.89	3.58	0.94	3.74	0.99	3.82	1.01	3.90	1.02	4.07	1.04	4.23	1.06
			27	2.80	0.92	3.51	0.97	3.67	1.02	3.76	1.03	3.84	1.05	4.00	1.07	4.17	1.08
			29	2.80	0.95	3.45	1.00	3.61	1.04	3.69	1.06	3.77	1.07	3.93	1.09	4.10	1.10
			31	2.80	0.99	3.39	1.04	3.55	1.07	3.63	1.09	3.71	1.10	3.87	1.12	4.03	1.12
			33	2.80	1.02	3.32	1.07	3.48	1.10	3.56	1.12	3.64	1.13	3.80	1.14	3.97	1.14
			35	2.80	1.06	3.26	1.10	3.42	1.13	3.50	1.13	3.58	1.15	3.74	1.17	3.90	1.17
			37	2.80	1.09	3.20	1.13	3.36	1.16	3.43	1.17	3.51	1.18	3.67	1.19	3.83	1.19
			39	2.80	1.13	3.14	1.17	3.29	1.19	3.37	1.20	3.45	1.21	3.61	1.22	3.77	1.21
			42	2.77	1.18	3.05	1.22	3.20	1.24	3.28	1.25	3.35	1.26	3.51	1.26	3.67	1.25
			44	2.63	1.22	2.98	1.25	3.14	1.27	3.21	1.28	3.29	1.28	3.45	1.28	3.60	1.27
			46	2.56	1.26	2.92	1.29	3.07	1.31	3.15	1.31	3.23	1.32	3.38	1.31	3.54	1.30
5000	5000	71%	10	3.92	0.88	5.68	0.98	5.92	1.06	6.04	1.10	6.16	1.13	6.40	1.19	6.64	1.23
			12	3.92	0.92	5.59	1.02	5.82	1.10	5.94	1.13	6.06	1.16	6.30	1.22	6.55	1.25
			14	3.92	0.96	5.50	1.05	5.73	1.13	5.85	1.16	5.97	1.19	6.21	1.24	6.45	1.28
			16	3.92	1.00	5.41	1.09	5.64	1.17	5.76	1.20	5.88	1.23	6.12	1.27	6.35	1.30
			18	3.92	1.04	5.32	1.13	5.55	1.20	5.67	1.23	5.79	1.26	6.02	1.30	6.26	1.33
			20	3.92	1.08	5.23	1.17	5.46	1.24	5.58	1.26	5.69	1.29	5.93	1.33	6.16	1.35
			21	3.92	1.11	5.18	1.19	5.41	1.25	5.53	1.28	5.65	1.31	5.88	1.34	6.12	1.37
			23	3.92	1.15	5.10	1.23	5.32	1.29	5.44	1.32	5.56	1.34	5.79	1.37	6.02	1.39
			25	3.92	1.19	5.01	1.27	5.23	1.33	5.35	1.35	5.46	1.37	5.69	1.40	5.93	1.42
			27	3.92	1.24	4.92	1.31	5.14	1.37	5.26	1.39	5.37	1.41	5.60	1.44	5.83	1.45
			29	3.92	1.28	4.83	1.35	5.05	1.40	5.17	1.43	5.28	1.44	5.51	1.47	5.74	1.48
			31	3.92	1.33	4.74	1.39	4.97	1.44	5.08	1.46	5.19	1.48	5.42	1.50	5.64	1.51
			33	3.92	1.38	4.65	1.44	4.88	1.48	4.99	1.50	5.10	1.52	5.32	1.53	5.55	1.54
			35	3.92	1.42	4.57	1.48	4.79	1.52	4.90	1.52	5.01	1.55	5.23	1.57	5.46	1.57
			37	3.92	1.47	4.48	1.52	4.70	1.57	4.81	1.58	4.92	1.59	5.14	1.60	5.36	1.60
			39	3.92	1.52	4.39	1.57	4.61	1.61	4.72	1.62	4.83	1.63	5.05	1.64	5.27	1.63
			42	3.87	1.59	4.26	1.64	4.48	1.67	4.59	1.68	4.70	1.69	4.91	1.69	5.13	1.68
			44	3.68	1.64	4.18	1.69	4.39	1.71	4.50	1.72	4.61	1.73	4.82	1.73	5.04	1.71
			46	3.58	1.69	4.09	1.73	4.30	1.76	4.41	1.77	4.52	1.77	4.73	1.77	4.95	1.75

* All figures comply with EN14511

1. Cooling capacity is based on 27°CDB / 19°CWB (indoor temperature), 35°CDB (outdoor temperature).
2. Heating capacity is based on 20°CDB (indoor temperature), 7°CDB/6°CWB (outdoor temperature).
3. Capacities are based on the following conditions : - Corresponding refrigerant piping length : 5m / - Level difference : 0m
4. The total ability of connected a indoor unit is up to 10.5kW
5. It is impossible to connect the indoor unit for one room only.
6. This data is reference data for temperature capacity trend.

1) Cooling

COOLING

Combination (Capacity Index)					Combination (Total)	Combination (%)	Outdoor Temperature (°C, DB)	Indoor Temperature(°C, WB)													
								14		16		18		19		20		22		24	
								TC(kW)	PI(kW)	TC(kW)	PI(kW)	TC(kW)	PI(kW)	TC(kW)	PI(kW)	TC(kW)	PI(kW)	TC(kW)	PI(kW)	TC(kW)	PI(kW)
2000	2000				4000	57%	10	3.53	0.87	4.99	0.89	5.08	0.91	5.14	0.92	5.20	0.94	5.35	0.95	5.52	0.97
							12	3.53	0.89	4.85	0.91	4.95	0.94	5.01	0.95	5.08	0.96	5.23	0.98	5.41	1.00
							14	3.53	0.92	4.72	0.94	4.83	0.96	4.89	0.97	4.96	0.98	5.12	1.00	5.31	1.02
							16	3.53	0.94	4.60	0.96	4.71	0.98	4.78	0.99	4.85	1.00	5.02	1.02	5.21	1.04
							18	3.53	0.96	4.48	0.98	4.60	1.01	4.67	1.02	4.75	1.03	4.92	1.04	5.12	1.06
							20	3.53	0.99	4.36	1.01	4.49	1.03	4.57	1.04	4.65	1.05	4.83	1.07	5.03	1.09
							21	3.53	1.00	4.31	1.02	4.44	1.04	4.52	1.05	4.60	1.06	4.78	1.08	4.99	1.10
							23	3.53	1.03	4.20	1.05	4.34	1.07	4.42	1.08	4.51	1.09	4.70	1.11	4.91	1.13
							25	3.53	1.05	4.10	1.07	4.25	1.09	4.33	1.10	4.42	1.11	4.62	1.13	4.84	1.15
							27	3.53	1.08	4.01	1.10	4.16	1.12	4.25	1.13	4.34	1.14	4.55	1.16	4.78	1.18
							29	3.53	1.11	3.92	1.13	4.08	1.15	4.17	1.16	4.27	1.17	4.48	1.19	4.72	1.20
							31	3.53	1.13	3.84	1.15	4.01	1.18	4.10	1.19	4.20	1.19	4.42	1.21	4.66	1.23
							33	3.53	1.16	3.76	1.18	3.94	1.20	4.03	1.21	4.13	1.22	4.36	1.24	4.61	1.26
							35	3.53	1.19	3.69	1.21	3.87	1.23	4.00	1.24	4.08	1.25	4.31	1.27	4.57	1.29
							37	3.53	1.22	3.62	1.24	3.81	1.26	3.91	1.27	4.02	1.28	4.26	1.30	4.53	1.32
							39	3.53	1.25	3.56	1.27	3.76	1.29	3.86	1.30	3.98	1.31	4.22	1.33	4.49	1.35
							42	3.53	1.30	3.48	1.32	3.69	1.34	3.80	1.35	3.92	1.36	4.17	1.38	4.46	1.40
							44	3.53	1.33	3.44	1.35	3.65	1.37	3.76	1.38	3.89	1.39	4.15	1.41	4.44	1.43
							46	3.53	1.37	3.39	1.39	3.61	1.41	3.73	1.42	3.86	1.43	4.13	1.44	4.42	1.46
2000	2500				4500	64%	10	4.07	1.00	5.73	1.03	5.84	1.05	5.91	1.07	5.98	1.08	6.15	1.10	6.34	1.12
							12	4.07	1.03	5.58	1.06	5.69	1.08	5.76	1.09	5.84	1.10	6.02	1.13	6.22	1.15
							14	4.07	1.06	5.43	1.08	5.55	1.11	5.63	1.12	5.71	1.13	5.89	1.15	6.10	1.17
							16	4.07	1.08	5.29	1.11	5.42	1.13	5.50	1.14	5.58	1.16	5.77	1.18	5.99	1.20
							18	4.07	1.11	5.15	1.14	5.29	1.16	5.37	1.17	5.46	1.18	5.66	1.21	5.89	1.23
							20	4.07	1.14	5.02	1.16	5.17	1.19	5.25	1.20	5.34	1.21	5.55	1.23	5.79	1.25
							21	4.07	1.15	4.96	1.18	5.11	1.20	5.19	1.21	5.29	1.22	5.50	1.25	5.74	1.27
							23	4.07	1.18	4.83	1.21	4.99	1.23	5.09	1.24	5.18	1.25	5.40	1.28	5.65	1.30
							25	4.07	1.21	4.72	1.24	4.89	1.26	4.98	1.27	5.09	1.28	5.31	1.31	5.57	1.33
							27	4.07	1.24	4.61	1.27	4.79	1.29	4.89	1.30	4.99	1.31	5.23	1.34	5.49	1.36
							29	4.07	1.27	4.51	1.30	4.69	1.32	4.80	1.33	4.91	1.35	5.15	1.37	5.42	1.39
							31	4.07	1.31	4.42	1.33	4.61	1.36	4.71	1.37	4.83	1.38	5.08	1.40	5.36	1.42
							33	4.07	1.34	4.33	1.36	4.53	1.39	4.64	1.40	4.76	1.41	5.01	1.43	5.30	1.45
							35	4.07	1.37	4.24	1.40	4.45	1.42	4.60	1.43	4.69	1.44	4.96	1.47	5.25	1.49
							37	4.07	1.41	4.17	1.43	4.38	1.46	4.50	1.47	4.63	1.48	4.90	1.50	5.21	1.52
							39	4.07	1.44	4.10	1.47	4.32	1.49	4.44	1.50	4.57	1.51	4.86	1.54	5.17	1.56
							42	4.07	1.50	4.01	1.52	4.24	1.55	4.37	1.56	4.51	1.57	4.80	1.59	5.12	1.61
							44	4.07	1.54	3.95	1.56	4.20	1.58	4.33	1.59	4.47	1.61	4.77	1.63	5.10	1.65
							46	4.07	1.57	3.90	1.60	4.16	1.62	4.29	1.63	4.44	1.64	4.75	1.66	5.09	1.68
2000	3500				5500	79%	10	4.86	1.20	6.86	1.23	6.99	1.26	7.06	1.28	7.15	1.29	7.35	1.32	7.59	1.34
							12	4.86	1.23	6.67	1.26	6.81	1.29	6.89	1.31	6.98	1.32	7.19	1.35	7.44	1.37
							14	4.86	1.26	6.49	1.29	6.64	1.32	6.73	1.34	6.82	1.35	7.04	1.38	7.30	1.40
							16	4.86	1.29	6.32	1.32	6.48	1.35	6.57	1.37	6.67	1.38	6.90	1.41	7.16	1.43
							18	4.86	1.33	6.16	1.36	6.32	1.39	6.42	1.40	6.53	1.41	6.76	1.44	7.04	1.47
							20	4.86	1.36	6.00	1.39	6.18	1.42	6.28	1.43	6.39	1.45	6.64	1.47	6.92	1.50
							21	4.86	1.38	5.92	1.41	6.11	1.44	6.21	1.45	6.32	1.46	6.58	1.49	6.86	1.52
							23	4.86	1.41	5.78	1.44	5.97	1.47	6.08	1.49	6.20	1.50	6.46	1.53	6.76	1.55
							25	4.86	1.45	5.64	1.48	5.84	1.51	5.96	1.52	6.08	1.54	6.35	1.56	6.66	1.59
							27	4.86	1.49	5.51	1.52	5.72	1.54	5.84	1.56	5.97	1.57	6.25	1.60	6.57	1.62
							29	4.86	1.52	5.39	1.55	5.61	1.58	5.74	1.60	5.87	1.61	6.16	1.64	6.48	1.66
							31	4.86	1.56	5.28	1.59	5.51	1.62	5.64	1.63	5.77	1.65	6.07	1.67	6.41	1.70
							33	4.86	1.60	5.17	1.63	5.41	1.66	5.54	1.67	5.69	1.69	5.99	1.71	6.34	1.74
							35	4.86	1.64	5.07	1.67	5.32	1.70	5.50	1.71	5.61	1.73	5.92	1.75	6.28	1.78
							37	4.86	1.69	4.98	1.71	5.24	1.74	5.38	1.76	5.53	1.77	5.86	1.79	6.23	1.82
							39	4.86	1.73	4.90	1.76	5.17	1.78	5.31	1.80	5.47	1.81	5.81	1.84	6.18	1.86
							42	4.86	1.79	4.79	1.82	5.07	1.85	5.22	1.86	5.39	1.88	5.74	1.90	6.13	1.93
							44	4.86	1.84	4.72	1.87	5.02	1.89	5.17	1.91	5.34	1.92	5.70	1.95	6.10	1.97
							46	4.86	1.88	4.67	1.91	4.97	1.94	5.13	1.95	5.30	1.97	5.68	1.99	6.08	2.01
2000	5000				7000	100%	10	6.19	1.53	8.73	1.57	8.89	1.61	8.99	1.63	9.10	1.64	9.36	1.68	9.66	1.71
							12	6.19	1.57	8.49	1.61	8.67	1.65	8.77	1.66	8.89	1.68	9.15	1.72	9.47	1.75
							14	6.19	1.61	8.26	1.65	8.45	1.69	8.56	1.70	8.68	1.72	8.96	1.76	9.29	1.79
							16	6.19	1.65	8.04	1.69	8.24	1.73	8.36	1.74	8.49	1.76	8.78	1.80	9.12	1.83
							18	6.19	1.69	7.83	1.73	8.05	1.77	8.17	1.79	8.31	1.80	8.61	1.84	8.96	1.87
							20	6.19	1.74	7.64	1.77	7.86	1.81	7.99	1.83	8.13	1.85	8.45	1.88	8.81	1.91
							21	6.19	1.76	7.54	1.80	7.77	1.83	7.90	1.85	8.05	1.87	8.37	1.90	8.74	1.93
							23	6.19	1.80	7.36	1.84	7.60	1.88	7.74	1.89	7.89	1.91	8.22	1.95	8.60	1.98
							25	6.19	1.85	7.18	1.89	7.44	1.92	7.58	1.94	7.74	1.96	8.08	1.99	8.47	2.02
							27	6.19	1.90	7.02	1.93	7.29	1.97	7.44	1.99	7.60	2.00	7.96	2.04	8.36	2.07
							29	6.19	1.94	6.86	1.98	7.14	2.02	7.30	2.03	7.47	2.05	7.84	2.09	8.25	2.12
							31	6.19	1.99	6.72	2.03	7.01	2.07	7.17	2.08	7.35	2.10	7.73	2.13	8.15	2.17
							33	6.19	2.04	6.58	2.08	6.89	2.12	7.06	2.13	7.24	2.15	7.63	2.18	8.07	2.22
							35	6.19	2.10	6.46	2.13	6.77	2.17	7.00	2.18	7.13	2.20	7.54	2.24	7.99	2.27
							37	6.19	2.15	6.34	2.19	6.67	2.22	6.85	2.24	7.04	2.25	7.46	2.29	7.92	2.32
							39	6.19	2.20	6.24	2.24	6.58	2.27	6.76	2.29	6.96	2.31	7.39	2.34	7.87	2.37
							42	6.19	2.29	6.09	2.32	6.45	2.36	6.65	2.37	6.86	2.39	7.30	2.42	7.80	2.45
							44	6.19	2.34	6.01	2.38	6.38	2.41	6.59	2.43	6.80	2.45	7.26	2.48	7.76	2.51
							46	6.19	2.40	5.94	2.44	6.32	2.47	6.53	2.49	6.75	2.51	7.22	2.54	7.74	2.57

* All figures comply with EN14511

1. Cooling capacity is based on 27°CDB / 19°CWB (indoor temperature), 35°CDB (outdoor temperature).
2. Heating capacity is based on 20°CDB (indoor temperature), 7°CDB/6°CWB (outdoor temperature).
3. Capacities are based on the following conditions : - Corresponding refrigerant piping length : 5m / - Level difference : 0m
4. The total ability of connected a indoor unit is up to 10.5kW
5. It is impossible to connect the indoor unit for one room only.
6. This data is reference data for temperature capacity trend.

5 AJ070FCJ4EH

1) Cooling

COOLING

Combination (Capacity Index)					Combination (Total)	Combination (%)	Outdoor Temperature (°C, DB)	Indoor Temperature(°C, WB)													
								14		16		18		19		20		22		24	
								TC(kW)	PI(kW)	TC(kW)	PI(kW)	TC(kW)	PI(kW)	TC(kW)	PI(kW)	TC(kW)	PI(kW)	TC(kW)	PI(kW)	TC(kW)	PI(kW)
2500	2500				5000	71%	10	4.60	1.17	6.48	1.20	6.61	1.22	6.68	1.24	6.76	1.25	6.95	1.28	7.17	1.30
							12	4.60	1.20	6.31	1.22	6.44	1.25	6.52	1.27	6.60	1.28	6.80	1.31	7.03	1.33
							14	4.60	1.23	6.14	1.25	6.28	1.28	6.36	1.30	6.45	1.31	6.66	1.34	6.90	1.36
							16	4.60	1.26	5.97	1.29	6.12	1.31	6.21	1.33	6.31	1.34	6.52	1.37	6.77	1.39
							18	4.60	1.29	5.82	1.32	5.98	1.35	6.07	1.36	6.17	1.37	6.40	1.40	6.65	1.42
							20	4.60	1.32	5.67	1.35	5.84	1.38	5.94	1.39	6.04	1.41	6.28	1.43	6.54	1.46
							21	4.60	1.34	5.60	1.37	5.77	1.39	5.87	1.41	5.98	1.42	6.22	1.45	6.49	1.47
							23	4.60	1.37	5.47	1.40	5.65	1.43	5.75	1.44	5.86	1.46	6.11	1.48	6.39	1.51
							25	4.60	1.41	5.34	1.44	5.53	1.46	5.63	1.48	5.75	1.49	6.01	1.52	6.29	1.54
							27	4.60	1.44	5.21	1.47	5.41	1.50	5.52	1.51	5.64	1.53	5.91	1.55	6.21	1.58
							29	4.60	1.48	5.10	1.51	5.31	1.54	5.42	1.55	5.55	1.56	5.82	1.59	6.13	1.61
							31	4.60	1.52	4.99	1.55	5.21	1.57	5.33	1.59	5.46	1.60	5.74	1.63	6.06	1.65
							33	4.60	1.56	4.89	1.58	5.12	1.61	5.24	1.62	5.38	1.64	5.67	1.66	5.99	1.69
							35	4.60	1.60	4.80	1.62	5.03	1.65	5.20	1.66	5.30	1.68	5.60	1.70	5.94	1.73
							37	4.60	1.64	4.71	1.66	4.95	1.69	5.09	1.70	5.23	1.72	5.54	1.74	5.89	1.77
							39	4.60	1.68	4.63	1.71	4.89	1.73	5.02	1.74	5.17	1.76	5.49	1.78	5.84	1.81
							42	4.60	1.74	4.53	1.77	4.79	1.80	4.94	1.81	5.09	1.82	5.43	1.85	5.79	1.87
							44	4.60	1.78	4.47	1.81	4.74	1.84	4.89	1.85	5.05	1.86	5.39	1.89	5.77	1.91
							46	4.60	1.83	4.41	1.86	4.70	1.88	4.85	1.90	5.02	1.91	5.37	1.93	5.75	1.96
2500	3500				6000	86%	10	5.39	1.32	7.60	1.35	7.75	1.39	7.83	1.40	7.93	1.42	8.15	1.45	8.41	1.48
							12	5.39	1.35	7.40	1.39	7.55	1.42	7.64	1.44	7.75	1.45	7.98	1.48	8.25	1.51
							14	5.39	1.39	7.20	1.42	7.36	1.45	7.46	1.47	7.57	1.48	7.81	1.51	8.09	1.54
							16	5.39	1.42	7.01	1.46	7.18	1.49	7.29	1.50	7.40	1.52	7.65	1.55	7.94	1.58
							18	5.39	1.46	6.83	1.49	7.01	1.52	7.12	1.54	7.24	1.55	7.50	1.58	7.81	1.61
							20	5.39	1.50	6.65	1.53	6.85	1.56	6.96	1.58	7.09	1.59	7.36	1.62	7.67	1.65
							21	5.39	1.52	6.57	1.55	6.77	1.58	6.89	1.60	7.01	1.61	7.29	1.64	7.61	1.67
							23	5.39	1.55	6.41	1.59	6.62	1.62	6.74	1.63	6.87	1.65	7.16	1.68	7.49	1.71
							25	5.39	1.59	6.26	1.63	6.48	1.66	6.61	1.67	6.74	1.69	7.04	1.72	7.38	1.74
							27	5.39	1.63	6.12	1.67	6.35	1.70	6.48	1.71	6.62	1.73	6.93	1.76	7.28	1.78
							29	5.39	1.68	5.98	1.71	6.22	1.74	6.36	1.75	6.51	1.77	6.83	1.80	7.19	1.83
							31	5.39	1.72	5.85	1.75	6.11	1.78	6.25	1.80	6.40	1.81	6.73	1.84	7.11	1.87
							33	5.39	1.76	5.74	1.79	6.00	1.83	6.15	1.84	6.31	1.85	6.65	1.88	7.03	1.91
							35	5.39	1.81	5.63	1.84	5.90	1.87	6.10	1.88	6.22	1.90	6.57	1.93	6.96	1.96
							37	5.39	1.85	5.53	1.88	5.81	1.92	5.97	1.93	6.14	1.94	6.50	1.97	6.90	2.00
							39	5.39	1.90	5.43	1.93	5.73	1.96	5.89	1.98	6.07	1.99	6.44	2.02	6.85	2.05
							42	5.39	1.97	5.31	2.00	5.62	2.03	5.79	2.05	5.97	2.06	6.37	2.09	6.79	2.12
							44	5.39	2.02	5.24	2.05	5.56	2.08	5.74	2.10	5.92	2.11	6.33	2.14	6.77	2.17
							46	5.39	2.07	5.18	2.10	5.51	2.13	5.69	2.15	5.88	2.16	6.29	2.19	6.74	2.22
2500	5000				7500	107%	10	6.19	1.53	8.73	1.57	8.89	1.61	8.99	1.63	9.10	1.64	9.36	1.68	9.66	1.71
							12	6.19	1.57	8.49	1.61	8.67	1.65	8.77	1.66	8.89	1.68	9.15	1.72	9.47	1.75
							14	6.19	1.61	8.26	1.65	8.45	1.69	8.56	1.70	8.68	1.72	8.96	1.76	9.29	1.79
							16	6.19	1.65	8.04	1.69	8.24	1.73	8.36	1.74	8.49	1.76	8.78	1.80	9.12	1.83
							18	6.19	1.69	7.83	1.73	8.05	1.77	8.17	1.79	8.31	1.80	8.61	1.84	8.96	1.87
							20	6.19	1.74	7.64	1.77	7.86	1.81	7.99	1.83	8.13	1.85	8.45	1.88	8.81	1.91
							21	6.19	1.76	7.54	1.80	7.77	1.83	7.90	1.85	8.05	1.87	8.37	1.90	8.74	1.93
							23	6.19	1.80	7.36	1.84	7.60	1.88	7.74	1.89	7.89	1.91	8.22	1.95	8.60	1.98
							25	6.19	1.85	7.18	1.89	7.44	1.92	7.58	1.94	7.74	1.96	8.08	1.99	8.47	2.02
							27	6.19	1.90	7.02	1.93	7.29	1.97	7.44	1.99	7.60	2.00	7.96	2.04	8.36	2.07
							29	6.19	1.94	6.86	1.98	7.14	2.02	7.30	2.03	7.47	2.05	7.84	2.09	8.25	2.12
							31	6.19	1.99	6.72	2.03	7.01	2.07	7.17	2.08	7.35	2.10	7.73	2.13	8.15	2.17
							33	6.19	2.04	6.58	2.08	6.89	2.12	7.06	2.13	7.24	2.15	7.63	2.18	8.07	2.22
							35	6.19	2.10	6.46	2.13	6.77	2.17	7.00	2.18	7.13	2.20	7.54	2.24	7.99	2.27
							37	6.19	2.15	6.34	2.19	6.67	2.22	6.85	2.24	7.04	2.25	7.46	2.29	7.92	2.32
							39	6.19	2.20	6.24	2.24	6.58	2.27	6.76	2.29	6.96	2.31	7.39	2.34	7.87	2.37
							42	6.19	2.29	6.09	2.32	6.45	2.36	6.65	2.37	6.86	2.39	7.30	2.42	7.80	2.45
							44	6.19	2.34	6.01	2.38	6.38	2.41	6.59	2.43	6.80	2.45	7.26	2.48	7.76	2.51
							46	6.19	2.40	5.94	2.44	6.32	2.47	6.53	2.49	6.75	2.51	7.22	2.54	7.74	2.57
3500	3500				7000	100%	10	6.19	1.75	8.73	1.79	8.89	1.84	8.99	1.86	9.10	1.88	9.36	1.92	9.66	1.96
							12	6.19	1.79	8.49	1.84	8.67	1.88	8.77	1.90	8.89	1.92	9.15	1.96	9.47	2.00
							14	6.19	1.84	8.26	1.88	8.45	1.92	8.56	1.95	8.68	1.97	8.96	2.01	9.29	2.04
							16	6.19	1.89	8.04	1.93	8.24	1.97	8.36	1.99	8.49	2.01	8.78	2.05	9.12	2.09
							18	6.19	1.93	7.83	1.98	8.05	2.02	8.17	2.04	8.31	2.06	8.61	2.10	8.96	2.14
							20	6.19	1.98	7.64	2.03	7.86	2.07	7.99	2.09	8.13	2.11	8.45	2.15	8.81	2.18
							21	6.19	2.01	7.54	2.05	7.77	2.09	7.90	2.11	8.05	2.13	8.37	2.17	8.74	2.21
							23	6.19	2.06	7.36	2.10	7.60	2.14	7.74	2.16	7.89	2.18	8.22	2.22	8.60	2.26
							25	6.19	2.11	7.18	2.15	7.44	2.20	7.58	2.22	7.74	2.24	8.08	2.27	8.47	2.31
							27	6.19	2.16	7.02	2.21	7.29	2.25	7.44	2.27	7.60	2.29	7.96	2.33	8.36	2.36
							29	6.19	2.22	6.86	2.26	7.14	2.30	7.30	2.32	7.47	2.34	7.84	2.38	8.25	2.42
							31	6.19	2.28	6.72	2.32	7.01	2.36	7.17	2.38	7.35	2.40	7.73	2.44	8.15	2.47
							33	6.19	2.33	6.58	2.38	6.89	2.42	7.06	2.44	7.24	2.46	7.63	2.49	8.07	2.53
							35	6.19	2.39	6.46	2.44	6.77	2.48	7.00	2.49	7.13	2.52	7.54	2.55	7.99	2.59
							37	6.19	2.45	6.34	2.50	6.67	2.54	6.85	2.56	7.04	2.58	7.46	2.61	7.92	2.65
							39	6.19	2.52	6.24	2.56	6.58	2.60	6.76	2.62	6.96	2.64	7.39	2.67	7.87	2.71
							42	6.19	2.61	6.09	2.65	6.45	2.69	6.65	2.71	6.86	2.73	7.30	2.77	7.80	2.80
							44	6.19	2.68	6.01	2.72	6.38	2.76	6.59	2.78	6.80	2.80	7.26	2.83	7.76	2.87
							46	6.19	2.74	5.94	2.78	6.32	2.82	6.53	2.84	6.75	2.86	7.22	2.90	7.74	2.93

* All figures comply with EN14511

1. Cooling capacity is based on 27°CDB / 19°CWB (indoor temperature), 35°CDB (outdoor temperature).
2. Heating capacity is based on 20°CDB (indoor temperature), 7°CDB/6°CWB (outdoor temperature).
3. Capacities are based on the following conditions : - Corresponding refrigerant piping length : 5m / - Level difference : 0m
4. The total ability of connected a indoor unit is up to 10.5kW
5. It is impossible to connect the indoor unit for one room only.
6. This data is reference data for temperature capacity trend.

2) Heating

COOLING

Combination (Capacity Index)					Combination (Total)	Combination (%)	Outdoor Temperature (°C, DB)	Indoor Temperature(°C, WB)													
								14		16		18		19		20		22		24	
								TC(kW)	PI(kW)	TC(kW)	PI(kW)	TC(kW)	PI(kW)	TC(kW)	PI(kW)	TC(kW)	PI(kW)	TC(kW)	PI(kW)	TC(kW)	PI(kW)
3500	5000				8500	121%	10	6.19	1.48	8.73	1.52	8.89	1.56	8.99	1.57	9.10	1.59	9.36	1.62	9.66	1.66
							12	6.19	1.52	8.49	1.56	8.67	1.59	8.77	1.61	8.89	1.63	9.15	1.66	9.47	1.69
							14	6.19	1.56	8.26	1.60	8.45	1.63	8.56	1.65	8.68	1.67	8.96	1.70	9.29	1.73
							16	6.19	1.60	8.04	1.63	8.24	1.67	8.36	1.69	8.49	1.70	8.78	1.74	9.12	1.77
							18	6.19	1.64	7.83	1.67	8.05	1.71	8.17	1.73	8.31	1.74	8.61	1.78	8.96	1.81
							20	6.19	1.68	7.64	1.72	7.86	1.75	7.99	1.77	8.13	1.79	8.45	1.82	8.81	1.85
							21	6.19	1.70	7.54	1.74	7.77	1.77	7.90	1.79	8.05	1.81	8.37	1.84	8.74	1.87
							23	6.19	1.74	7.36	1.78	7.60	1.82	7.74	1.83	7.89	1.85	8.22	1.88	8.60	1.91
							25	6.19	1.79	7.18	1.83	7.44	1.86	7.58	1.88	7.74	1.89	8.08	1.93	8.47	1.96
							27	6.19	1.83	7.02	1.87	7.29	1.91	7.44	1.92	7.60	1.94	7.96	1.97	8.36	2.00
							29	6.19	1.88	6.86	1.92	7.14	1.95	7.30	1.97	7.47	1.99	7.84	2.02	8.25	2.05
							31	6.19	1.93	6.72	1.97	7.01	2.00	7.17	2.02	7.35	2.03	7.73	2.07	8.15	2.10
							33	6.19	1.98	6.58	2.01	6.89	2.05	7.06	2.07	7.24	2.08	7.63	2.11	8.07	2.14
							35	6.19	2.03	6.46	2.06	6.77	2.10	7.00	2.11	7.13	2.13	7.54	2.16	7.99	2.19
							37	6.19	2.08	6.34	2.11	6.67	2.15	6.85	2.17	7.04	2.18	7.46	2.21	7.92	2.24
							39	6.19	2.13	6.24	2.17	6.58	2.20	6.76	2.22	6.96	2.23	7.39	2.27	7.87	2.30
							42	6.19	2.21	6.09	2.25	6.45	2.28	6.65	2.30	6.86	2.31	7.30	2.35	7.80	2.38
							44	6.19	2.27	6.01	2.30	6.38	2.34	6.59	2.35	6.80	2.37	7.26	2.40	7.76	2.43
							46	6.19	2.32	5.94	2.36	6.32	2.39	6.53	2.41	6.75	2.42	7.22	2.46	7.74	2.49
5000	5000				10000	143%	10	7.87	1.40	8.18	1.43	8.49	1.46	8.65	1.48	8.81	1.49	9.14	1.52	9.46	1.55
							12	7.73	1.44	8.04	1.47	8.36	1.50	8.52	1.52	8.68	1.53	9.00	1.56	9.33	1.59
							14	7.60	1.48	7.91	1.51	8.22	1.54	8.38	1.55	8.54	1.57	8.87	1.60	9.20	1.63
							16	7.46	1.52	7.77	1.55	8.09	1.58	8.25	1.59	8.41	1.61	8.73	1.64	9.06	1.67
							18	7.33	1.56	7.64	1.59	7.95	1.62	8.11	1.63	8.27	1.65	8.60	1.68	8.93	1.71
							20	7.19	1.60	7.50	1.63	7.82	1.66	7.98	1.68	8.14	1.69	8.47	1.72	8.80	1.75
							21	7.12	1.62	7.44	1.65	7.75	1.68	7.91	1.70	8.07	1.71	8.40	1.74	8.73	1.77
							23	6.99	1.66	7.30	1.69	7.62	1.72	7.78	1.74	7.94	1.75	8.27	1.78	8.60	1.82
							25	6.85	1.70	7.17	1.73	7.49	1.76	7.65	1.78	7.81	1.80	8.14	1.83	8.47	1.86
							27	6.72	1.74	7.03	1.78	7.35	1.81	7.51	1.82	7.68	1.84	8.00	1.87	8.34	1.90
							29	6.59	1.79	6.90	1.82	7.22	1.85	7.38	1.87	7.54	1.88	7.87	1.92	8.21	1.95
							31	6.45	1.83	6.77	1.86	7.09	1.90	7.25	1.91	7.41	1.93	7.74	1.96	8.08	1.99
							33	6.32	1.88	6.64	1.91	6.96	1.94	7.12	1.96	7.28	1.97	7.61	2.01	7.95	2.04
							35	6.19	1.92	6.50	1.96	6.82	1.99	7.00	2.00	7.15	2.02	7.48	2.05	7.82	2.09
							37	6.05	1.97	6.37	2.00	6.69	2.03	6.86	2.05	7.02	2.07	7.35	2.10	7.69	2.13
							39	5.92	2.02	6.24	2.05	6.56	2.08	6.73	2.10	6.89	2.12	7.22	2.15	7.56	2.18
							42	5.73	2.09	6.04	2.12	6.37	2.15	6.53	2.17	6.70	2.19	7.03	2.22	7.37	2.25
							44	5.59	2.14	5.91	2.17	6.24	2.20	6.40	2.22	6.57	2.24	6.90	2.27	7.24	2.30
							46	5.46	2.19	5.78	2.22	6.11	2.25	6.27	2.27	6.44	2.29	6.77	2.32	7.11	2.35
2000	2000	2000			6000	86%	10	5.30	1.26	7.48	1.30	7.62	1.33	7.71	1.34	7.80	1.36	8.02	1.39	8.28	1.41
							12	5.30	1.30	7.28	1.33	7.43	1.36	7.52	1.37	7.62	1.39	7.85	1.42	8.11	1.44
							14	5.30	1.33	7.08	1.36	7.24	1.39	7.34	1.41	7.44	1.42	7.68	1.45	7.96	1.48
							16	5.30	1.36	6.89	1.39	7.07	1.42	7.17	1.44	7.28	1.45	7.53	1.48	7.81	1.51
							18	5.30	1.40	6.72	1.43	6.90	1.46	7.00	1.47	7.12	1.49	7.38	1.52	7.68	1.54
							20	5.30	1.43	6.55	1.46	6.74	1.49	6.85	1.51	6.97	1.52	7.24	1.55	7.55	1.58
							21	5.30	1.45	6.46	1.48	6.66	1.51	6.78	1.53	6.90	1.54	7.17	1.57	7.49	1.60
							23	5.30	1.49	6.31	1.52	6.51	1.55	6.63	1.56	6.76	1.58	7.05	1.61	7.37	1.63
							25	5.30	1.53	6.16	1.56	6.38	1.59	6.50	1.60	6.63	1.62	6.93	1.64	7.26	1.67
							27	5.30	1.56	6.02	1.60	6.25	1.63	6.37	1.64	6.51	1.65	6.82	1.68	7.16	1.71
							29	5.30	1.60	5.88	1.64	6.12	1.67	6.26	1.68	6.40	1.69	6.72	1.72	7.07	1.75
							31	5.30	1.65	5.76	1.68	6.01	1.71	6.15	1.72	6.30	1.73	6.62	1.76	6.99	1.79
							33	5.30	1.69	5.64	1.72	5.90	1.75	6.05	1.76	6.20	1.78	6.54	1.80	6.92	1.83
							35	5.30	1.73	5.54	1.76	5.81	1.79	6.00	1.80	6.12	1.82	6.46	1.85	6.85	1.87
							37	5.30	1.77	5.44	1.80	5.72	1.83	5.87	1.85	6.04	1.86	6.39	1.89	6.79	1.91
							39	5.30	1.82	5.34	1.85	5.64	1.88	5.80	1.89	5.97	1.91	6.34	1.93	6.74	1.96
							42	5.30	1.89	5.22	1.92	5.53	1.95	5.70	1.96	5.88	1.97	6.26	2.00	6.68	2.03
							44	5.30	1.93	5.15	1.96	5.47	1.99	5.64	2.01	5.83	2.02	6.22	2.05	6.65	2.07
							46	5.30	1.98	5.09	2.01	5.42	2.04	5.60	2.05	5.79	2.07	6.19	2.10	6.63	2.12
2000	2000	2500			6500	93%	10	5.83	1.29	8.23	1.32	8.38	1.35	8.48	1.36	8.58	1.38	8.82	1.41	9.10	1.44
							12	5.83	1.32	8.00	1.35	8.17	1.38	8.27	1.40	8.38	1.41	8.63	1.44	8.93	1.47
							14	5.83	1.35	7.79	1.38	7.97	1.41	8.07	1.43	8.19	1.44	8.45	1.47	8.76	1.50
							16	5.83	1.39	7.58	1.42	7.77	1.45	7.88	1.46	8.01	1.48	8.28	1.51	8.60	1.54
							18	5.83	1.42	7.39	1.45	7.59	1.48	7.70	1.50	7.83	1.51	8.12	1.54	8.45	1.57
							20	5.83	1.46	7.20	1.49	7.41	1.52	7.53	1.53	7.67	1.55	7.96	1.58	8.30	1.61
							21	5.83	1.48	7.11	1.51	7.33	1.54	7.45	1.55	7.59	1.57	7.89	1.60	8.24	1.62
							23	5.83	1.51	6.94	1.54	7.17	1.58	7.30	1.59	7.44	1.60	7.75	1.63	8.11	1.66
							25	5.83	1.55	6.77	1.58	7.01	1.61	7.15	1.63	7.30	1.64	7.62	1.67	7.99	1.70
							27	5.83	1.59	6.62	1.62	6.87	1.65	7.01	1.67	7.16	1.68	7.50	1.71	7.88	1.74
							29	5.83	1.63	6.47	1.66	6.74	1.69	6.88	1.71	7.04	1.72	7.39	1.75	7.78	1.78
							31	5.83	1.67	6.33	1.70	6.61	1.73	6.76	1.75	6.93	1.76	7.29	1.79	7.69	1.82
							33	5.83	1.72	6.21	1.75	6.49	1.78	6.65	1.79	6.82	1.81	7.19	1.83	7.61	1.86
							35	5.83	1.76	6.09	1.79	6.39	1.82	6.60	1.83	6.73	1.85	7.11	1.88	7.53	1.90
							37	5.83	1.80	5.98	1.83	6.29	1.86	6.46	1.88	6.64	1.89	7.03	1.92	7.47	1.95
							39	5.83	1.85	5.88	1.88	6.20	1.91	6.38	1.92	6.56	1.94	6.97	1.97	7.42	1.99
							42	5.83	1.92	5.75	1.95	6.08	1.98	6.27	1.99	6.46	2.01	6.89	2.03	7.35	2.06
							44	5.83	1.97	5.67	2.00	6.02	2.03	6.21	2.04	6.41	2.05	6.84	2.08	7.32	2.11
							46	5.83	2.02	5.60	2.05	5.96	2.08	6.16	2.09	6.37	2.10	6.81	2.13	7.30	2.16

* All figures comply with EN14511

1. Cooling capacity is based on 27°CDB / 19°CWB (indoor temperature), 35°CDB (outdoor temperature).
2. Heating capacity is based on 20°CDB (indoor temperature), 7°CDB/6°CWB (outdoor temperature).
3. Capacities are based on the following conditions : - Corresponding refrigerant piping length : 5m / - Level difference : 0m
4. The total ability of connected a indoor unit is up to 10.5kW
5. It is impossible to connect the indoor unit for one room only.
6. This data is reference data for temperature capacity trend.

5 AJ070FCJ4EH

1) Cooling

COOLING

Combination (Capacity Index)					Combination (Total)	Combination (%)	Outdoor Temperature (°C, DB)	Indoor Temperature(°C, WB)													
								14		16		18		19		20		22		24	
								TC(kW)	PI(kW)	TC(kW)	PI(kW)	TC(kW)	PI(kW)	TC(kW)	PI(kW)	TC(kW)	PI(kW)	TC(kW)	PI(kW)	TC(kW)	PI(kW)
2000	2000	3500			7500	107%	10	5.90	1.29	8.33	1.32	8.49	1.35	8.58	1.37	8.69	1.38	8.93	1.41	9.21	1.44
							12	5.90	1.32	8.10	1.35	8.27	1.39	8.37	1.40	8.48	1.42	8.74	1.44	9.03	1.47
							14	5.90	1.35	7.88	1.39	8.06	1.42	8.17	1.43	8.29	1.45	8.55	1.48	8.86	1.51
							16	5.90	1.39	7.68	1.42	7.87	1.45	7.98	1.47	8.10	1.48	8.38	1.51	8.70	1.54
							18	5.90	1.42	7.48	1.46	7.68	1.49	7.80	1.50	7.93	1.52	8.22	1.55	8.55	1.57
							20	5.90	1.46	7.29	1.49	7.50	1.52	7.63	1.54	7.76	1.55	8.06	1.58	8.40	1.61
							21	5.90	1.48	7.20	1.51	7.42	1.54	7.54	1.56	7.68	1.57	7.99	1.60	8.34	1.63
							23	5.90	1.52	7.02	1.55	7.25	1.58	7.39	1.59	7.53	1.61	7.85	1.64	8.21	1.67
							25	5.90	1.56	6.85	1.59	7.10	1.62	7.24	1.63	7.39	1.65	7.71	1.68	8.09	1.70
							27	5.90	1.60	6.70	1.63	6.95	1.66	7.10	1.67	7.25	1.69	7.59	1.72	7.98	1.74
							29	5.90	1.64	6.55	1.67	6.82	1.70	6.97	1.71	7.13	1.73	7.48	1.76	7.87	1.78
							31	5.90	1.68	6.41	1.71	6.69	1.74	6.85	1.75	7.01	1.77	7.38	1.80	7.78	1.82
							33	5.90	1.72	6.28	1.75	6.57	1.78	6.73	1.80	6.91	1.81	7.28	1.84	7.70	1.87
							35	5.90	1.76	6.16	1.79	6.46	1.82	6.68	1.84	6.81	1.85	7.20	1.88	7.63	1.91
							37	5.90	1.81	6.05	1.84	6.37	1.87	6.54	1.88	6.72	1.90	7.12	1.93	7.56	1.95
							39	5.90	1.85	5.95	1.88	6.28	1.91	6.45	1.93	6.64	1.94	7.05	1.97	7.51	2.00
							42	5.90	1.92	5.82	1.95	6.16	1.98	6.35	2.00	6.54	2.01	6.97	2.04	7.44	2.07
							44	5.90	1.97	5.74	2.00	6.09	2.03	6.28	2.05	6.49	2.06	6.93	2.09	7.41	2.11
							46	5.90	2.02	5.67	2.05	6.03	2.08	6.23	2.09	6.44	2.11	6.89	2.14	7.39	2.16
2000	2000	5000			9000	129%	10	7.87	1.30	8.18	1.33	8.49	1.35	8.65	1.37	8.81	1.38	9.14	1.41	9.46	1.44
							12	7.73	1.33	8.04	1.36	8.36	1.39	8.52	1.40	8.68	1.42	9.00	1.44	9.33	1.47
							14	7.60	1.37	7.91	1.40	8.22	1.42	8.38	1.44	8.54	1.45	8.87	1.48	9.20	1.51
							16	7.46	1.40	7.77	1.43	8.09	1.46	8.25	1.47	8.41	1.49	8.73	1.52	9.06	1.55
							18	7.33	1.44	7.64	1.47	7.95	1.50	8.11	1.51	8.27	1.53	8.60	1.55	8.93	1.58
							20	7.19	1.48	7.50	1.51	7.82	1.54	7.98	1.55	8.14	1.56	8.47	1.59	8.80	1.62
							21	7.12	1.50	7.44	1.53	7.75	1.55	7.91	1.57	8.07	1.58	8.40	1.61	8.73	1.64
							23	6.99	1.54	7.30	1.56	7.62	1.59	7.78	1.61	7.94	1.62	8.27	1.65	8.60	1.68
							25	6.85	1.57	7.17	1.60	7.49	1.63	7.65	1.65	7.81	1.66	8.14	1.69	8.47	1.72
							27	6.72	1.61	7.03	1.64	7.35	1.67	7.51	1.69	7.68	1.70	8.00	1.73	8.34	1.76
							29	6.59	1.65	6.90	1.68	7.22	1.71	7.38	1.73	7.54	1.74	7.87	1.77	8.21	1.80
							31	6.45	1.70	6.77	1.72	7.09	1.75	7.25	1.77	7.41	1.78	7.74	1.81	8.08	1.84
							33	6.32	1.74	6.64	1.77	6.96	1.80	7.12	1.81	7.28	1.83	7.61	1.86	7.95	1.89
							35	6.19	1.78	6.50	1.81	6.82	1.84	7.00	1.85	7.15	1.87	7.48	1.90	7.82	1.93
							37	6.05	1.82	6.37	1.85	6.69	1.88	6.86	1.90	7.02	1.91	7.35	1.94	7.69	1.97
							39	5.92	1.87	6.24	1.90	6.56	1.93	6.73	1.94	6.89	1.96	7.22	1.99	7.56	2.02
							42	5.73	1.93	6.04	1.96	6.37	1.99	6.53	2.01	6.70	2.02	7.03	2.05	7.37	2.08
							44	5.59	1.98	5.91	2.01	6.24	2.04	6.40	2.05	6.57	2.07	6.90	2.10	7.24	2.13
							46	5.46	2.02	5.78	2.05	6.11	2.08	6.27	2.10	6.44	2.12	6.77	2.15	7.11	2.18
2000	2500	2500			7000	100%	10	5.88	1.29	8.29	1.32	8.45	1.35	8.54	1.36	8.65	1.38	8.89	1.41	9.17	1.44
							12	5.88	1.32	8.06	1.35	8.23	1.38	8.33	1.40	8.44	1.41	8.70	1.44	8.99	1.47
							14	5.88	1.35	7.85	1.38	8.03	1.41	8.13	1.43	8.25	1.44	8.52	1.47	8.82	1.50
							16	5.88	1.39	7.64	1.42	7.83	1.45	7.94	1.46	8.07	1.48	8.34	1.51	8.66	1.54
							18	5.88	1.42	7.44	1.45	7.65	1.48	7.76	1.50	7.89	1.51	8.18	1.54	8.51	1.57
							20	5.88	1.46	7.25	1.49	7.47	1.52	7.59	1.53	7.73	1.55	8.02	1.58	8.37	1.61
							21	5.88	1.48	7.16	1.51	7.38	1.54	7.51	1.55	7.65	1.57	7.95	1.60	8.30	1.62
							23	5.88	1.51	6.99	1.54	7.22	1.58	7.35	1.59	7.49	1.60	7.81	1.63	8.17	1.66
							25	5.88	1.55	6.82	1.58	7.07	1.61	7.20	1.63	7.35	1.64	7.68	1.67	8.05	1.70
							27	5.88	1.59	6.67	1.62	6.92	1.65	7.06	1.67	7.22	1.68	7.56	1.71	7.94	1.74
							29	5.88	1.63	6.52	1.66	6.79	1.69	6.94	1.71	7.09	1.72	7.45	1.75	7.84	1.78
							31	5.88	1.67	6.38	1.70	6.66	1.73	6.81	1.75	6.98	1.76	7.34	1.79	7.75	1.82
							33	5.88	1.72	6.25	1.75	6.54	1.78	6.70	1.79	6.87	1.81	7.25	1.83	7.66	1.86
							35	5.88	1.76	6.13	1.79	6.44	1.82	6.65	1.83	6.78	1.85	7.16	1.88	7.59	1.90
							37	5.88	1.80	6.02	1.83	6.34	1.86	6.51	1.88	6.69	1.89	7.09	1.92	7.53	1.95
							39	5.88	1.85	5.92	1.88	6.25	1.91	6.42	1.92	6.61	1.94	7.02	1.97	7.47	1.99
							42	5.88	1.92	5.79	1.95	6.13	1.98	6.32	1.99	6.51	2.01	6.94	2.03	7.41	2.06
							44	5.88	1.97	5.71	2.00	6.06	2.03	6.26	2.04	6.46	2.05	6.90	2.08	7.38	2.11
							46	5.88	2.02	5.64	2.05	6.01	2.08	6.21	2.09	6.41	2.10	6.86	2.13	7.35	2.16
2000	2500	3500			8000	114%	10	7.58	1.29	7.88	1.32	8.18	1.35	8.33	1.36	8.48	1.37	8.80	1.40	9.11	1.43
							12	7.45	1.33	7.75	1.35	8.05	1.38	8.20	1.39	8.35	1.41	8.67	1.44	8.98	1.46
							14	7.32	1.36	7.61	1.39	7.92	1.42	8.07	1.43	8.23	1.44	8.54	1.47	8.85	1.50
							16	7.18	1.40	7.48	1.42	7.79	1.45	7.94	1.47	8.10	1.48	8.41	1.51	8.73	1.54
							18	7.05	1.43	7.35	1.46	7.66	1.49	7.81	1.50	7.97	1.52	8.28	1.55	8.60	1.57
							20	6.92	1.47	7.22	1.50	7.53	1.53	7.68	1.54	7.84	1.56	8.15	1.58	8.47	1.61
							21	6.86	1.49	7.16	1.52	7.46	1.55	7.62	1.56	7.77	1.57	8.09	1.60	8.41	1.63
							23	6.73	1.53	7.03	1.56	7.34	1.58	7.49	1.60	7.65	1.61	7.96	1.64	8.28	1.67
							25	6.60	1.57	6.90	1.59	7.21	1.62	7.36	1.64	7.52	1.65	7.83	1.68	8.15	1.71
							27	6.47	1.61	6.77	1.63	7.08	1.66	7.24	1.68	7.39	1.69	7.71	1.72	8.03	1.75
							29	6.34	1.65	6.64	1.67	6.95	1.70	7.11	1.72	7.26	1.73	7.58	1.76	7.90	1.79
							31	6.21	1.69	6.52	1.72	6.83	1.75	6.98	1.76	7.14	1.77	7.45	1.80	7.78	1.83
							33	6.09	1.73	6.39	1.76	6.70	1.79	6.85	1.80	7.01	1.82	7.33	1.85	7.65	1.88
							35	5.96	1.77	6.26	1.80	6.57	1.83	6.74	1.84	6.89	1.86	7.20	1.89	7.53	1.92
							37	5.83	1.81	6.14	1.84	6.45	1.87	6.60	1.89	6.76	1.90	7.08	1.93	7.40	1.96
							39	5.70	1.86	6.01	1.89	6.32	1.92	6.48	1.93	6.63	1.95	6.95	1.98	7.28	2.01
							42	5.51	1.92	5.82	1.95	6.13	1.98	6.29	2.00	6.45	2.01	6.77	2.04	7.09	2.07
							44	5.39	1.97	5.69	2.00	6.01	2.03	6.16	2.04	6.32	2.06	6.64	2.09	6.97	2.12
							46	5.26	2.01	5.57	2.04	5.88	2.07	6.04	2.09	6.20	2.10	6.52	2.14	6.85	2.17

* All figures comply with EN14511

1. Cooling capacity is based on 27°CDB / 19°CWB (indoor temperature), 35°CDB (outdoor temperature).
2. Heating capacity is based on 20°CDB (indoor temperature), 7°CDB/6°CWB (outdoor temperature).
3. Capacities are based on the following conditions : - Corresponding refrigerant piping length : 5m / - Level difference : 0m
4. The total ability of connected a indoor unit is up to 10.5kW
5. It is impossible to connect the indoor unit for one room only.
6. This data is reference data for temperature capacity trend.

2) Heating

COOLING

Combination (Capacity Index)					Combination (Total)	Combination (%)	Outdoor Temperature (°C, DB)	Indoor Temperature(°C, WB)													
								14		16		18		19		20		22		24	
								TC(kW)	PI(kW)	TC(kW)	PI(kW)	TC(kW)	PI(kW)	TC(kW)	PI(kW)	TC(kW)	PI(kW)	TC(kW)	PI(kW)	TC(kW)	PI(kW)
2000	2500	5000			9500	136%	10	7.87	1.32	8.18	1.35	8.49	1.38	8.65	1.39	8.81	1.40	9.14	1.43	9.46	1.46
							12	7.73	1.35	8.04	1.38	8.36	1.41	8.52	1.43	8.68	1.44	9.00	1.47	9.33	1.50
							14	7.60	1.39	7.91	1.42	8.22	1.45	8.38	1.46	8.54	1.48	8.87	1.50	9.20	1.53
							16	7.46	1.43	7.77	1.46	8.09	1.48	8.25	1.50	8.41	1.51	8.73	1.54	9.06	1.57
							18	7.33	1.46	7.64	1.49	7.95	1.52	8.11	1.54	8.27	1.55	8.60	1.58	8.93	1.61
							20	7.19	1.50	7.50	1.53	7.82	1.56	7.98	1.57	8.14	1.59	8.47	1.62	8.80	1.65
							21	7.12	1.52	7.44	1.55	7.75	1.58	7.91	1.59	8.07	1.61	8.40	1.64	8.73	1.67
							23	6.99	1.56	7.30	1.59	7.62	1.62	7.78	1.63	7.94	1.65	8.27	1.68	8.60	1.71
							25	6.85	1.60	7.17	1.63	7.49	1.66	7.65	1.67	7.81	1.69	8.14	1.72	8.47	1.75
							27	6.72	1.64	7.03	1.67	7.35	1.70	7.51	1.71	7.68	1.73	8.00	1.76	8.34	1.79
							29	6.59	1.68	6.90	1.71	7.22	1.74	7.38	1.76	7.54	1.77	7.87	1.80	8.21	1.83
							31	6.45	1.72	6.77	1.75	7.09	1.78	7.25	1.80	7.41	1.81	7.74	1.84	8.08	1.87
							33	6.32	1.76	6.64	1.80	6.96	1.83	7.12	1.84	7.28	1.86	7.61	1.89	7.95	1.92
							35	6.19	1.81	6.50	1.84	6.82	1.87	7.00	1.88	7.15	1.90	7.48	1.93	7.82	1.96
							37	6.05	1.85	6.37	1.88	6.69	1.91	6.86	1.93	7.02	1.94	7.35	1.97	7.69	2.00
							39	5.92	1.90	6.24	1.93	6.56	1.96	6.73	1.97	6.89	1.99	7.22	2.02	7.56	2.05
							42	5.73	1.96	6.04	1.99	6.37	2.03	6.53	2.04	6.70	2.06	7.03	2.09	7.37	2.12
							44	5.59	2.01	5.91	2.04	6.24	2.07	6.40	2.09	6.57	2.10	6.90	2.13	7.24	2.17
							46	5.46	2.06	5.78	2.09	6.11	2.12	6.27	2.13	6.44	2.15	6.77	2.18	7.11	2.21
2000	3500	3500			9000	129%	10	7.67	1.30	7.97	1.33	8.28	1.35	8.43	1.37	8.59	1.38	8.90	1.41	9.22	1.44
							12	7.54	1.33	7.84	1.36	8.14	1.39	8.30	1.40	8.45	1.42	8.77	1.44	9.09	1.47
							14	7.40	1.37	7.70	1.40	8.01	1.42	8.17	1.44	8.32	1.45	8.64	1.48	8.96	1.51
							16	7.27	1.40	7.57	1.43	7.88	1.46	8.04	1.47	8.19	1.49	8.51	1.52	8.83	1.55
							18	7.14	1.44	7.44	1.47	7.75	1.50	7.91	1.51	8.06	1.53	8.38	1.55	8.70	1.58
							20	7.01	1.48	7.31	1.51	7.62	1.54	7.77	1.55	7.93	1.56	8.25	1.59	8.57	1.62
							21	6.94	1.50	7.24	1.53	7.55	1.55	7.71	1.57	7.87	1.58	8.18	1.61	8.51	1.64
							23	6.81	1.54	7.11	1.56	7.42	1.59	7.58	1.61	7.74	1.62	8.06	1.65	8.38	1.68
							25	6.68	1.57	6.98	1.60	7.29	1.63	7.45	1.65	7.61	1.66	7.93	1.69	8.25	1.72
							27	6.55	1.61	6.85	1.64	7.16	1.67	7.32	1.69	7.48	1.70	7.80	1.73	8.12	1.76
							29	6.42	1.65	6.72	1.68	7.03	1.71	7.19	1.73	7.35	1.74	7.67	1.77	8.00	1.80
							31	6.29	1.70	6.59	1.72	6.91	1.75	7.06	1.77	7.22	1.78	7.54	1.81	7.87	1.84
							33	6.16	1.74	6.47	1.77	6.78	1.80	6.94	1.81	7.09	1.83	7.42	1.86	7.74	1.89
							35	6.03	1.78	6.34	1.81	6.65	1.84	6.82	1.85	6.97	1.87	7.29	1.90	7.62	1.93
							37	5.90	1.82	6.21	1.85	6.52	1.88	6.68	1.90	6.84	1.91	7.16	1.94	7.49	1.97
							39	5.77	1.87	6.08	1.90	6.39	1.93	6.55	1.94	6.71	1.96	7.04	1.99	7.36	2.02
							42	5.58	1.93	5.89	1.96	6.20	1.99	6.36	2.01	6.52	2.02	6.85	2.05	7.18	2.08
							44	5.45	1.98	5.76	2.01	6.08	2.04	6.24	2.05	6.40	2.07	6.72	2.10	7.05	2.13
							46	5.32	2.02	5.63	2.05	5.95	2.08	6.11	2.10	6.27	2.12	6.60	2.15	6.93	2.18
2000	3500	5000			10500	150%	10	7.87	1.35	8.18	1.38	8.49	1.41	8.65	1.43	8.81	1.44	9.14	1.47	9.46	1.50
							12	7.73	1.39	8.04	1.42	8.36	1.45	8.52	1.46	8.68	1.48	9.00	1.51	9.33	1.54
							14	7.60	1.43	7.91	1.46	8.22	1.49	8.38	1.50	8.54	1.52	8.87	1.54	9.20	1.57
							16	7.46	1.46	7.77	1.49	8.09	1.52	8.25	1.54	8.41	1.55	8.73	1.58	9.06	1.61
							18	7.33	1.50	7.64	1.53	7.95	1.56	8.11	1.58	8.27	1.59	8.60	1.62	8.93	1.65
							20	7.19	1.54	7.50	1.57	7.82	1.60	7.98	1.62	8.14	1.63	8.47	1.66	8.80	1.69
							21	7.12	1.56	7.44	1.59	7.75	1.62	7.91	1.64	8.07	1.65	8.40	1.68	8.73	1.71
							23	6.99	1.60	7.30	1.63	7.62	1.66	7.78	1.68	7.94	1.69	8.27	1.72	8.60	1.75
							25	6.85	1.64	7.17	1.67	7.49	1.70	7.65	1.72	7.81	1.73	8.14	1.76	8.47	1.79
							27	6.72	1.68	7.03	1.71	7.35	1.74	7.51	1.76	7.68	1.78	8.00	1.81	8.34	1.84
							29	6.59	1.73	6.90	1.76	7.22	1.79	7.38	1.80	7.54	1.82	7.87	1.85	8.21	1.88
							31	6.45	1.77	6.77	1.80	7.09	1.83	7.25	1.85	7.41	1.86	7.74	1.89	8.08	1.92
							33	6.32	1.81	6.64	1.84	6.96	1.87	7.12	1.89	7.28	1.91	7.61	1.94	7.95	1.97
							35	6.19	1.86	6.50	1.89	6.82	1.92	7.00	1.93	7.15	1.95	7.48	1.98	7.82	2.01
							37	6.05	1.90	6.37	1.93	6.69	1.96	6.86	1.98	7.02	2.00	7.35	2.03	7.69	2.06
							39	5.92	1.95	6.24	1.98	6.56	2.01	6.73	2.03	6.89	2.04	7.22	2.07	7.56	2.10
							42	5.73	2.02	6.04	2.05	6.37	2.08	6.53	2.10	6.70	2.11	7.03	2.14	7.37	2.18
							44	5.59	2.06	5.91	2.09	6.24	2.13	6.40	2.14	6.57	2.16	6.90	2.19	7.24	2.22
							46	5.46	2.11	5.78	2.14	6.11	2.17	6.27	2.19	6.44	2.21	6.77	2.24	7.11	2.27
2500	2500	2500			7500	107%	10	7.56	1.29	7.85	1.32	8.15	1.35	8.31	1.36	8.46	1.37	8.77	1.40	9.08	1.43
							12	7.42	1.33	7.72	1.35	8.02	1.38	8.18	1.39	8.33	1.41	8.64	1.44	8.96	1.46
							14	7.29	1.36	7.59	1.39	7.89	1.42	8.05	1.43	8.20	1.44	8.51	1.47	8.83	1.50
							16	7.16	1.40	7.46	1.42	7.76	1.45	7.92	1.47	8.07	1.48	8.38	1.51	8.70	1.54
							18	7.03	1.43	7.33	1.46	7.64	1.49	7.79	1.50	7.94	1.52	8.26	1.55	8.57	1.57
							20	6.90	1.47	7.20	1.50	7.51	1.53	7.66	1.54	7.82	1.56	8.13	1.58	8.45	1.61
							21	6.84	1.49	7.14	1.52	7.44	1.55	7.60	1.56	7.75	1.57	8.06	1.60	8.38	1.63
							23	6.71	1.53	7.01	1.56	7.31	1.58	7.47	1.60	7.62	1.61	7.94	1.64	8.26	1.67
							25	6.58	1.57	6.88	1.59	7.19	1.62	7.34	1.64	7.50	1.65	7.81	1.68	8.13	1.71
							27	6.45	1.61	6.75	1.63	7.06	1.66	7.21	1.68	7.37	1.69	7.68	1.72	8.00	1.75
							29	6.32	1.65	6.63	1.67	6.93	1.70	7.09	1.72	7.24	1.73	7.56	1.76	7.88	1.79
							31	6.19	1.69	6.50	1.72	6.80	1.75	6.96	1.76	7.12	1.77	7.43	1.80	7.75	1.83
							33	6.07	1.73	6.37	1.76	6.68	1.79	6.83	1.80	6.99	1.82	7.31	1.85	7.63	1.88
							35	5.94	1.77	6.24	1.80	6.55	1.83	6.72	1.84	6.86	1.86	7.18	1.89	7.50	1.92
							37	5.81	1.81	6.12	1.84	6.43	1.87	6.58	1.89	6.74	1.90	7.06	1.93	7.38	1.96
							39	5.69	1.86	5.99	1.89	6.30	1.92	6.46	1.93	6.61	1.95	6.93	1.98	7.26	2.01
							42	5.50	1.92	5.80	1.95	6.11	1.98	6.27	2.00	6.43	2.01	6.75	2.04	7.07	2.07
							44	5.37	1.97	5.68	2.00	5.99	2.03	6.15	2.04	6.30	2.06	6.62	2.09	6.95	2.12
							46	5.24	2.01	5.55	2.04	5.86	2.07	6.02	2.09	6.18	2.10	6.50	2.14	6.82	2.17

* All figures comply with EN14511

1. Cooling capacity is based on 27°CDB / 19°CWB (indoor temperature), 35°CDB (outdoor temperature).
2. Heating capacity is based on 20°CDB (indoor temperature), 7°CDB/6°CWB (outdoor temperature).
3. Capacities are based on the following conditions : - Corresponding refrigerant piping length : 5m / - Level difference : 0m
4. The total ability of connected a indoor unit is up to 10.5kW
5. It is impossible to connect the indoor unit for one room only.
6. This data is reference data for temperature capacity trend.

5 AJ070FCJ4EH

1) Cooling

COOLING

Combination (Capacity Index)					Combination (Total)	Combination (%)	Outdoor Temperature (°C, DB)	Indoor Temperature(°C, WB)													
								14		16		18		19		20		22		24	
								TC(kW)	PI(kW)	TC(kW)	PI(kW)	TC(kW)	PI(kW)	TC(kW)	PI(kW)	TC(kW)	PI(kW)	TC(kW)	PI(kW)	TC(kW)	PI(kW)
2500	2500	3500			8500	121%	10	7.63	1.30	7.93	1.33	8.24	1.35	8.39	1.37	8.55	1.38	8.86	1.41	9.18	1.44
							12	7.50	1.33	7.80	1.36	8.11	1.39	8.26	1.40	8.42	1.42	8.73	1.44	9.05	1.47
							14	7.37	1.37	7.67	1.40	7.98	1.42	8.13	1.44	8.29	1.45	8.60	1.48	8.92	1.51
							16	7.24	1.40	7.54	1.43	7.85	1.46	8.00	1.47	8.16	1.49	8.47	1.52	8.79	1.55
							18	7.11	1.44	7.41	1.47	7.72	1.50	7.87	1.51	8.03	1.53	8.34	1.55	8.66	1.58
							20	6.98	1.48	7.28	1.51	7.59	1.54	7.74	1.55	7.90	1.56	8.21	1.59	8.53	1.62
							21	6.91	1.50	7.21	1.53	7.52	1.55	7.68	1.57	7.83	1.58	8.15	1.61	8.47	1.64
							23	6.78	1.54	7.08	1.56	7.39	1.59	7.55	1.61	7.70	1.62	8.02	1.65	8.34	1.68
							25	6.65	1.57	6.95	1.60	7.26	1.63	7.42	1.65	7.57	1.66	7.89	1.69	8.21	1.72
							27	6.52	1.61	6.82	1.64	7.13	1.67	7.29	1.69	7.45	1.70	7.76	1.73	8.09	1.76
							29	6.39	1.65	6.69	1.68	7.00	1.71	7.16	1.73	7.32	1.74	7.64	1.77	7.96	1.80
							31	6.26	1.70	6.57	1.72	6.88	1.75	7.03	1.77	7.19	1.78	7.51	1.81	7.83	1.84
							33	6.13	1.74	6.44	1.77	6.75	1.80	6.91	1.81	7.06	1.83	7.38	1.86	7.71	1.89
							35	6.00	1.78	6.31	1.81	6.62	1.84	6.79	1.85	6.94	1.87	7.26	1.90	7.58	1.93
							37	5.87	1.82	6.18	1.85	6.49	1.88	6.65	1.90	6.81	1.91	7.13	1.94	7.46	1.97
							39	5.75	1.87	6.05	1.90	6.37	1.93	6.52	1.94	6.68	1.96	7.01	1.99	7.33	2.02
							42	5.55	1.93	5.86	1.96	6.18	1.99	6.33	2.01	6.49	2.02	6.82	2.05	7.14	2.08
							44	5.43	1.98	5.74	2.01	6.05	2.04	6.21	2.05	6.37	2.07	6.69	2.10	7.02	2.13
							46	5.30	2.02	5.61	2.05	5.92	2.08	6.08	2.10	6.24	2.12	6.57	2.15	6.90	2.18
2500	2500	5000			10000	143%	10	7.87	1.32	8.18	1.35	8.49	1.38	8.65	1.39	8.81	1.40	9.14	1.43	9.46	1.46
							12	7.73	1.35	8.04	1.38	8.36	1.41	8.52	1.43	8.68	1.44	9.00	1.47	9.33	1.50
							14	7.60	1.39	7.91	1.42	8.22	1.45	8.38	1.46	8.54	1.48	8.87	1.50	9.20	1.53
							16	7.46	1.43	7.77	1.46	8.09	1.48	8.25	1.50	8.41	1.51	8.73	1.54	9.06	1.57
							18	7.33	1.46	7.64	1.49	7.95	1.52	8.11	1.54	8.27	1.55	8.60	1.58	8.93	1.61
							20	7.19	1.50	7.50	1.53	7.82	1.56	7.98	1.57	8.14	1.59	8.47	1.62	8.80	1.65
							21	7.12	1.52	7.44	1.55	7.75	1.58	7.91	1.59	8.07	1.61	8.40	1.64	8.73	1.67
							23	6.99	1.56	7.30	1.59	7.62	1.62	7.78	1.63	7.94	1.65	8.27	1.68	8.60	1.71
							25	6.85	1.60	7.17	1.63	7.49	1.66	7.65	1.67	7.81	1.69	8.14	1.72	8.47	1.75
							27	6.72	1.64	7.03	1.67	7.35	1.70	7.51	1.71	7.68	1.73	8.00	1.76	8.34	1.79
							29	6.59	1.68	6.90	1.71	7.22	1.74	7.38	1.76	7.54	1.77	7.87	1.80	8.21	1.83
							31	6.45	1.72	6.77	1.75	7.09	1.78	7.25	1.80	7.41	1.81	7.74	1.84	8.08	1.87
							33	6.32	1.76	6.64	1.80	6.96	1.83	7.12	1.84	7.28	1.86	7.61	1.89	7.95	1.92
							35	6.19	1.81	6.50	1.84	6.82	1.87	7.00	1.88	7.15	1.90	7.48	1.93	7.82	1.96
							37	6.05	1.85	6.37	1.88	6.69	1.91	6.86	1.93	7.02	1.94	7.35	1.97	7.69	2.00
							39	5.92	1.90	6.24	1.93	6.56	1.96	6.73	1.97	6.89	1.99	7.22	2.02	7.56	2.05
							42	5.73	1.96	6.04	1.99	6.37	2.03	6.53	2.04	6.70	2.06	7.03	2.09	7.37	2.12
							44	5.59	2.01	5.91	2.04	6.24	2.07	6.40	2.09	6.57	2.10	6.90	2.13	7.24	2.17
							46	5.46	2.06	5.78	2.09	6.11	2.12	6.27	2.13	6.44	2.15	6.77	2.18	7.11	2.21
2500	3500	3500			9500	136%	10	7.87	1.32	8.18	1.35	8.49	1.38	8.65	1.39	8.81	1.40	9.14	1.43	9.46	1.46
							12	7.73	1.35	8.04	1.38	8.36	1.41	8.52	1.43	8.68	1.44	9.00	1.47	9.33	1.50
							14	7.60	1.39	7.91	1.42	8.22	1.45	8.38	1.46	8.54	1.48	8.87	1.50	9.20	1.53
							16	7.46	1.43	7.77	1.46	8.09	1.48	8.25	1.50	8.41	1.51	8.73	1.54	9.06	1.57
							18	7.33	1.46	7.64	1.49	7.95	1.52	8.11	1.54	8.27	1.55	8.60	1.58	8.93	1.61
							20	7.19	1.50	7.50	1.53	7.82	1.56	7.98	1.57	8.14	1.59	8.47	1.62	8.80	1.65
							21	7.12	1.52	7.44	1.55	7.75	1.58	7.91	1.59	8.07	1.61	8.40	1.64	8.73	1.67
							23	6.99	1.56	7.30	1.59	7.62	1.62	7.78	1.63	7.94	1.65	8.27	1.68	8.60	1.71
							25	6.85	1.60	7.17	1.63	7.49	1.66	7.65	1.67	7.81	1.69	8.14	1.72	8.47	1.75
							27	6.72	1.64	7.03	1.67	7.35	1.70	7.51	1.71	7.68	1.73	8.00	1.76	8.34	1.79
							29	6.59	1.68	6.90	1.71	7.22	1.74	7.38	1.76	7.54	1.77	7.87	1.80	8.21	1.83
							31	6.45	1.72	6.77	1.75	7.09	1.78	7.25	1.80	7.41	1.81	7.74	1.84	8.08	1.87
							33	6.32	1.76	6.64	1.80	6.96	1.83	7.12	1.84	7.28	1.86	7.61	1.89	7.95	1.92
							35	6.19	1.81	6.50	1.84	6.82	1.87	7.00	1.88	7.15	1.90	7.48	1.93	7.82	1.96
							37	6.05	1.85	6.37	1.88	6.69	1.91	6.86	1.93	7.02	1.94	7.35	1.97	7.69	2.00
							39	5.92	1.90	6.24	1.93	6.56	1.96	6.73	1.97	6.89	1.99	7.22	2.02	7.56	2.05
							42	5.73	1.96	6.04	1.99	6.37	2.03	6.53	2.04	6.70	2.06	7.03	2.09	7.37	2.12
							44	5.59	2.01	5.91	2.04	6.24	2.07	6.40	2.09	6.57	2.10	6.90	2.13	7.24	2.17
							46	5.46	2.06	5.78	2.09	6.11	2.12	6.27	2.13	6.44	2.15	6.77	2.18	7.11	2.21
3500	3500	3500			10500	150%	10	7.86	1.33	8.17	1.36	8.48	1.39	8.64	1.40	8.80	1.42	9.12	1.45	9.45	1.48
							12	7.72	1.37	8.03	1.40	8.35	1.43	8.50	1.44	8.66	1.45	8.99	1.48	9.32	1.51
							14	7.59	1.41	7.90	1.43	8.21	1.46	8.37	1.48	8.53	1.49	8.85	1.52	9.18	1.55
							16	7.45	1.44	7.76	1.47	8.08	1.50	8.24	1.51	8.40	1.53	8.72	1.56	9.05	1.59
							18	7.32	1.48	7.63	1.51	7.94	1.54	8.10	1.55	8.26	1.57	8.59	1.60	8.92	1.63
							20	7.18	1.52	7.49	1.55	7.81	1.58	7.97	1.59	8.13	1.61	8.46	1.64	8.79	1.67
							21	7.11	1.54	7.43	1.57	7.74	1.60	7.90	1.61	8.06	1.63	8.39	1.66	8.72	1.69
							23	6.98	1.58	7.29	1.61	7.61	1.64	7.77	1.65	7.93	1.67	8.26	1.70	8.59	1.73
							25	6.84	1.62	7.16	1.65	7.48	1.68	7.64	1.69	7.80	1.71	8.12	1.74	8.46	1.77
							27	6.71	1.66	7.02	1.69	7.34	1.72	7.50	1.73	7.67	1.75	7.99	1.78	8.33	1.81
							29	6.58	1.70	6.89	1.73	7.21	1.76	7.37	1.77	7.53	1.79	7.86	1.82	8.20	1.85
							31	6.44	1.74	6.76	1.77	7.08	1.80	7.24	1.82	7.40	1.83	7.73	1.86	8.06	1.89
							33	6.31	1.78	6.63	1.81	6.95	1.84	7.11	1.86	7.27	1.88	7.60	1.91	7.94	1.94
							35	6.18	1.83	6.49	1.86	6.82	1.89	6.99	1.90	7.14	1.92	7.47	1.95	7.81	1.98
							37	6.05	1.87	6.36	1.90	6.68	1.93	6.85	1.95	7.01	1.96	7.34	2.00	7.68	2.03
							39	5.91	1.92	6.23	1.95	6.55	1.98	6.72	1.99	6.88	2.01	7.21	2.04	7.55	2.07
							42	5.72	1.98	6.04	2.02	6.36	2.05	6.52	2.06	6.69	2.08	7.02	2.11	7.35	2.14
							44	5.59	2.03	5.91	2.06	6.23	2.09	6.39	2.11	6.56	2.13	6.89	2.16	7.23	2.19
							46	5.46	2.08	5.77	2.11	6.10	2.14	6.26	2.16	6.43	2.17	6.76	2.20	7.10	2.24

* All figures comply with EN14511

1. Cooling capacity is based on 27°CDB / 19°CWB (indoor temperature), 35°CDB (outdoor temperature).
2. Heating capacity is based on 20°CDB (indoor temperature), 7°CDB/6°CWB (outdoor temperature).
3. Capacities are based on the following conditions : - Corresponding refrigerant piping length : 5m / - Level difference : 0m
4. The total ability of connected a indoor unit is up to 10.5kW
5. It is impossible to connect the indoor unit for one room only.
6. This data is reference data for temperature capacity trend.

2) Heating

	Combination (Capacity Index)					Combination (Total)	Combination (%)	Outdoor Temperature (°C, DB)	Indoor Temperature(°C, WB)													
									14		16		18		19		20		22		24	
									TC(kW)	PI(kW)	TC(kW)	PI(kW)	TC(kW)	PI(kW)	TC(kW)	PI(kW)	TC(kW)	PI(kW)	TC(kW)	PI(kW)	TC(kW)	PI(kW)
COOLING	2000	2000	2000	2000		8000	114%	10	7.56	1.30	7.85	1.33	8.15	1.35	8.31	1.37	8.46	1.38	8.77	1.41	9.08	1.44
								12	7.42	1.33	7.72	1.36	8.02	1.39	8.18	1.40	8.33	1.42	8.64	1.44	8.96	1.47
								14	7.29	1.37	7.59	1.40	7.89	1.42	8.05	1.44	8.20	1.45	8.51	1.48	8.83	1.51
								16	7.16	1.40	7.46	1.43	7.76	1.46	7.92	1.47	8.07	1.49	8.38	1.52	8.70	1.55
								18	7.03	1.44	7.33	1.47	7.64	1.50	7.79	1.51	7.94	1.53	8.26	1.55	8.57	1.58
								20	6.90	1.48	7.20	1.51	7.51	1.54	7.66	1.55	7.82	1.56	8.13	1.59	8.45	1.62
								21	6.84	1.50	7.14	1.53	7.44	1.55	7.60	1.57	7.75	1.58	8.06	1.61	8.38	1.64
								23	6.71	1.54	7.01	1.56	7.31	1.59	7.47	1.61	7.62	1.62	7.94	1.65	8.26	1.68
								25	6.58	1.57	6.88	1.60	7.19	1.63	7.34	1.65	7.50	1.66	7.81	1.69	8.13	1.72
								27	6.45	1.61	6.75	1.64	7.06	1.67	7.21	1.69	7.37	1.70	7.68	1.73	8.00	1.76
								29	6.32	1.65	6.63	1.68	6.93	1.71	7.09	1.73	7.24	1.74	7.56	1.77	7.88	1.80
								31	6.19	1.70	6.50	1.72	6.80	1.75	6.96	1.77	7.12	1.78	7.43	1.81	7.75	1.84
								33	6.07	1.74	6.37	1.77	6.68	1.80	6.83	1.81	6.99	1.83	7.31	1.86	7.63	1.89
								35	5.94	1.78	6.24	1.81	6.55	1.84	6.72	1.85	6.86	1.87	7.18	1.90	7.50	1.93
								37	5.81	1.82	6.12	1.85	6.43	1.88	6.58	1.90	6.74	1.91	7.06	1.94	7.38	1.97
								39	5.69	1.87	5.99	1.90	6.30	1.93	6.46	1.94	6.61	1.96	6.93	1.99	7.26	2.02
								42	5.50	1.93	5.80	1.96	6.11	1.99	6.27	2.01	6.43	2.02	6.75	2.05	7.07	2.08
								44	5.37	1.98	5.68	2.01	5.99	2.04	6.15	2.05	6.30	2.07	6.62	2.10	6.95	2.13
								46	5.24	2.02	5.55	2.05	5.86	2.08	6.02	2.10	6.18	2.12	6.50	2.15	6.82	2.18
	2000	2000	2000	2500		8500	121%	10	7.62	1.32	7.92	1.35	8.23	1.38	8.38	1.39	8.54	1.40	8.85	1.43	9.17	1.46
								12	7.49	1.35	7.79	1.38	8.10	1.41	8.25	1.43	8.40	1.44	8.72	1.47	9.04	1.50
								14	7.36	1.39	7.66	1.42	7.96	1.45	8.12	1.46	8.27	1.48	8.59	1.50	8.91	1.53
								16	7.23	1.43	7.53	1.46	7.83	1.48	7.99	1.50	8.14	1.51	8.46	1.54	8.78	1.57
								18	7.10	1.46	7.40	1.49	7.70	1.52	7.86	1.54	8.01	1.55	8.33	1.58	8.65	1.61
								20	6.96	1.50	7.27	1.53	7.57	1.56	7.73	1.57	7.89	1.59	8.20	1.62	8.52	1.65
								21	6.90	1.52	7.20	1.55	7.51	1.58	7.66	1.59	7.82	1.61	8.14	1.64	8.46	1.67
								23	6.77	1.56	7.07	1.59	7.38	1.62	7.54	1.63	7.69	1.65	8.01	1.68	8.33	1.71
								25	6.64	1.60	6.94	1.63	7.25	1.66	7.41	1.67	7.56	1.69	7.88	1.72	8.20	1.75
								27	6.51	1.64	6.81	1.67	7.12	1.70	7.28	1.71	7.44	1.73	7.75	1.76	8.08	1.79
								29	6.38	1.68	6.68	1.71	6.99	1.74	7.15	1.76	7.31	1.77	7.63	1.80	7.95	1.83
								31	6.25	1.72	6.56	1.75	6.87	1.78	7.02	1.80	7.18	1.81	7.50	1.84	7.82	1.87
								33	6.12	1.76	6.43	1.80	6.74	1.83	6.89	1.84	7.05	1.86	7.37	1.89	7.70	1.92
								35	5.99	1.81	6.30	1.84	6.61	1.87	6.78	1.88	6.93	1.90	7.25	1.93	7.57	1.96
								37	5.86	1.85	6.17	1.88	6.48	1.91	6.64	1.93	6.80	1.94	7.12	1.97	7.45	2.00
								39	5.74	1.90	6.04	1.93	6.36	1.96	6.51	1.97	6.67	1.99	6.99	2.02	7.32	2.05
								42	5.55	1.96	5.85	1.99	6.17	2.03	6.33	2.04	6.48	2.06	6.81	2.09	7.13	2.12
								44	5.42	2.01	5.73	2.04	6.04	2.07	6.20	2.09	6.36	2.10	6.68	2.13	7.01	2.17
								46	5.29	2.06	5.60	2.09	5.92	2.12	6.07	2.13	6.23	2.15	6.56	2.18	6.89	2.21
	2000	2000	2000	3500		9500	136%	10	7.87	1.33	8.18	1.36	8.49	1.39	8.65	1.40	8.81	1.42	9.14	1.45	9.46	1.48
								12	7.73	1.37	8.04	1.40	8.36	1.43	8.52	1.44	8.68	1.45	9.00	1.48	9.33	1.51
								14	7.60	1.41	7.91	1.43	8.22	1.46	8.38	1.48	8.54	1.49	8.87	1.52	9.20	1.55
								16	7.46	1.44	7.77	1.47	8.09	1.50	8.25	1.51	8.41	1.53	8.73	1.56	9.06	1.59
								18	7.33	1.48	7.64	1.51	7.95	1.54	8.11	1.55	8.27	1.57	8.60	1.60	8.93	1.63
								20	7.19	1.52	7.50	1.55	7.82	1.58	7.98	1.59	8.14	1.61	8.47	1.64	8.80	1.67
								21	7.12	1.54	7.44	1.57	7.75	1.60	7.91	1.61	8.07	1.63	8.40	1.66	8.73	1.69
								23	6.99	1.58	7.30	1.61	7.62	1.64	7.78	1.65	7.94	1.67	8.27	1.70	8.60	1.73
								25	6.85	1.62	7.17	1.65	7.49	1.68	7.65	1.69	7.81	1.71	8.14	1.74	8.47	1.77
								27	6.72	1.66	7.03	1.69	7.35	1.72	7.51	1.73	7.68	1.75	8.00	1.78	8.34	1.81
								29	6.59	1.70	6.90	1.73	7.22	1.76	7.38	1.77	7.54	1.79	7.87	1.82	8.21	1.85
								31	6.45	1.74	6.77	1.77	7.09	1.80	7.25	1.82	7.41	1.83	7.74	1.86	8.08	1.89
								33	6.32	1.78	6.64	1.81	6.96	1.84	7.12	1.86	7.28	1.88	7.61	1.91	7.95	1.94
								35	6.19	1.83	6.50	1.86	6.82	1.89	7.00	1.90	7.15	1.92	7.48	1.95	7.82	1.98
								37	6.05	1.87	6.37	1.90	6.69	1.93	6.86	1.95	7.02	1.96	7.35	2.00	7.69	2.03
								39	5.92	1.92	6.24	1.95	6.56	1.98	6.73	1.99	6.89	2.01	7.22	2.04	7.56	2.07
								42	5.73	1.98	6.04	2.02	6.37	2.05	6.53	2.06	6.70	2.08	7.03	2.11	7.37	2.14
								44	5.59	2.03	5.91	2.06	6.24	2.09	6.40	2.11	6.57	2.13	6.90	2.16	7.24	2.19
								46	5.46	2.08	5.78	2.11	6.11	2.14	6.27	2.16	6.44	2.17	6.77	2.20	7.11	2.24
	2000	2000	2500	2500		9000	129%	10	7.87	1.32	8.18	1.35	8.49	1.38	8.65	1.39	8.81	1.40	9.14	1.43	9.46	1.46
								12	7.73	1.35	8.04	1.38	8.36	1.41	8.52	1.43	8.68	1.44	9.00	1.47	9.33	1.50
								14	7.60	1.39	7.91	1.42	8.22	1.45	8.38	1.46	8.54	1.48	8.87	1.50	9.20	1.53
								16	7.46	1.43	7.77	1.46	8.09	1.48	8.25	1.50	8.41	1.51	8.73	1.54	9.06	1.57
								18	7.33	1.46	7.64	1.49	7.95	1.52	8.11	1.54	8.27	1.55	8.60	1.58	8.93	1.61
								20	7.19	1.50	7.50	1.53	7.82	1.56	7.98	1.57	8.14	1.59	8.47	1.62	8.80	1.65
								21	7.12	1.52	7.44	1.55	7.75	1.58	7.91	1.59	8.07	1.61	8.40	1.64	8.73	1.67
								23	6.99	1.56	7.30	1.59	7.62	1.62	7.78	1.63	7.94	1.65	8.27	1.68	8.60	1.71
								25	6.85	1.60	7.17	1.63	7.49	1.66	7.65	1.67	7.81	1.69	8.14	1.72	8.47	1.75
								27	6.72	1.64	7.03	1.67	7.35	1.70	7.51	1.71	7.68	1.73	8.00	1.76	8.34	1.79
								29	6.59	1.68	6.90	1.71	7.22	1.74	7.38	1.76	7.54	1.77	7.87	1.80	8.21	1.83
								31	6.45	1.72	6.77	1.75	7.09	1.78	7.25	1.80	7.41	1.81	7.74	1.84	8.08	1.87
								33	6.32	1.76	6.64	1.80	6.96	1.83	7.12	1.84	7.28	1.86	7.61	1.89	7.95	1.92
								35	6.19	1.81	6.50	1.84	6.82	1.87	7.00	1.88	7.15	1.90	7.48	1.93	7.82	1.96
								37	6.05	1.85	6.37	1.88	6.69	1.91	6.86	1.93	7.02	1.94	7.35	1.97	7.69	2.00
								39	5.92	1.90	6.24	1.93	6.56	1.96	6.73	1.97	6.89	1.99	7.22	2.02	7.56	2.05
								42	5.73	1.96	6.04	1.99	6.37	2.03	6.53	2.04	6.70	2.06	7.03	2.09	7.37	2.12
								44	5.59	2.01	5.91	2.04	6.24	2.07	6.40	2.09	6.57	2.10	6.90	2.13	7.24	2.17
								46	5.46	2.06	5.78	2.09	6.11	2.12	6.27	2.13	6.44	2.15	6.77	2.18	7.11	2.21

* All figures comply with EN14511

1. Cooling capacity is based on 27°CDB / 19°CWB (indoor temperature), 35°CDB (outdoor temperature).
2. Heating capacity is based on 20°CDB (indoor temperature), 7°CDB/6°CWB (outdoor temperature).
3. Capacities are based on the following conditions : - Corresponding refrigerant piping length : 5m / - Level difference : 0m
4. The total ability of connected a indoor unit is up to 10.5kW
5. It is impossible to connect the indoor unit for one room only.
6. This data is reference data for temperature capacity trend.

5 AJ070FCJ4EH

1) Cooling

COOLING

Combination (Capacity Index)					Combination (Total)	Combination (%)	Outdoor Temperature (°C, DB)	Indoor Temperature(°C, WB)													
								14		16		18		19		20		22		24	
								TC(kW)	PI(kW)	TC(kW)	PI(kW)	TC(kW)	PI(kW)	TC(kW)	PI(kW)	TC(kW)	PI(kW)	TC(kW)	PI(kW)	TC(kW)	PI(kW)
2000	2000	2500	3500		10000	143%	10	7.87	1.33	8.18	1.36	8.49	1.39	8.65	1.40	8.81	1.42	9.14	1.45	9.46	1.48
							12	7.73	1.37	8.04	1.40	8.36	1.43	8.52	1.44	8.68	1.45	9.00	1.48	9.33	1.51
							14	7.60	1.41	7.91	1.43	8.22	1.46	8.38	1.48	8.54	1.49	8.87	1.52	9.20	1.55
							16	7.46	1.44	7.77	1.47	8.09	1.50	8.25	1.51	8.41	1.53	8.73	1.56	9.06	1.59
							18	7.33	1.48	7.64	1.51	7.95	1.54	8.11	1.55	8.27	1.57	8.60	1.60	8.93	1.63
							20	7.19	1.52	7.50	1.55	7.82	1.58	7.98	1.59	8.14	1.61	8.47	1.64	8.80	1.67
							21	7.12	1.54	7.44	1.57	7.75	1.60	7.91	1.61	8.07	1.63	8.40	1.66	8.73	1.69
							23	6.99	1.58	7.30	1.61	7.62	1.64	7.78	1.65	7.94	1.67	8.27	1.70	8.60	1.73
							25	6.85	1.62	7.17	1.65	7.49	1.68	7.65	1.69	7.81	1.71	8.14	1.74	8.47	1.77
							27	6.72	1.66	7.03	1.69	7.35	1.72	7.51	1.73	7.68	1.75	8.00	1.78	8.34	1.81
							29	6.59	1.70	6.90	1.73	7.22	1.76	7.38	1.77	7.54	1.79	7.87	1.82	8.21	1.85
							31	6.45	1.74	6.77	1.77	7.09	1.80	7.25	1.82	7.41	1.83	7.74	1.86	8.08	1.89
							33	6.32	1.78	6.64	1.81	6.96	1.84	7.12	1.86	7.28	1.88	7.61	1.91	7.95	1.94
							35	6.19	1.83	6.50	1.86	6.82	1.89	7.00	1.90	7.15	1.92	7.48	1.95	7.82	1.98
							37	6.05	1.87	6.37	1.90	6.69	1.93	6.86	1.95	7.02	1.96	7.35	2.00	7.69	2.03
							39	5.92	1.92	6.24	1.95	6.56	1.98	6.73	1.99	6.89	2.01	7.22	2.04	7.56	2.07
							42	5.73	1.98	6.04	2.02	6.37	2.05	6.53	2.06	6.70	2.08	7.03	2.11	7.37	2.14
							44	5.59	2.03	5.91	2.06	6.24	2.09	6.40	2.11	6.57	2.13	6.90	2.16	7.24	2.19
							46	5.46	2.08	5.78	2.11	6.11	2.14	6.27	2.16	6.44	2.17	6.77	2.20	7.11	2.24
2000	2500	2500	2500		9500	136%	10	7.87	1.33	8.18	1.36	8.49	1.39	8.65	1.40	8.81	1.42	9.14	1.45	9.46	1.48
							12	7.73	1.37	8.04	1.40	8.36	1.43	8.52	1.44	8.68	1.45	9.00	1.48	9.33	1.51
							14	7.60	1.41	7.91	1.43	8.22	1.46	8.38	1.48	8.54	1.49	8.87	1.52	9.20	1.55
							16	7.46	1.44	7.77	1.47	8.09	1.50	8.25	1.51	8.41	1.53	8.73	1.56	9.06	1.59
							18	7.33	1.48	7.64	1.51	7.95	1.54	8.11	1.55	8.27	1.57	8.60	1.60	8.93	1.63
							20	7.19	1.52	7.50	1.55	7.82	1.58	7.98	1.59	8.14	1.61	8.47	1.64	8.80	1.67
							21	7.12	1.54	7.44	1.57	7.75	1.60	7.91	1.61	8.07	1.63	8.40	1.66	8.73	1.69
							23	6.99	1.58	7.30	1.61	7.62	1.64	7.78	1.65	7.94	1.67	8.27	1.70	8.60	1.73
							25	6.85	1.62	7.17	1.65	7.49	1.68	7.65	1.69	7.81	1.71	8.14	1.74	8.47	1.77
							27	6.72	1.66	7.03	1.69	7.35	1.72	7.51	1.73	7.68	1.75	8.00	1.78	8.34	1.81
							29	6.59	1.70	6.90	1.73	7.22	1.76	7.38	1.77	7.54	1.79	7.87	1.82	8.21	1.85
							31	6.45	1.74	6.77	1.77	7.09	1.80	7.25	1.82	7.41	1.83	7.74	1.86	8.08	1.89
							33	6.32	1.78	6.64	1.81	6.96	1.84	7.12	1.86	7.28	1.88	7.61	1.91	7.95	1.94
							35	6.19	1.83	6.50	1.86	6.82	1.89	7.00	1.90	7.15	1.92	7.48	1.95	7.82	1.98
							37	6.05	1.87	6.37	1.90	6.69	1.93	6.86	1.95	7.02	1.96	7.35	2.00	7.69	2.03
							39	5.92	1.92	6.24	1.95	6.56	1.98	6.73	1.99	6.89	2.01	7.22	2.04	7.56	2.07
							42	5.73	1.98	6.04	2.02	6.37	2.05	6.53	2.06	6.70	2.08	7.03	2.11	7.37	2.14
							44	5.59	2.03	5.91	2.06	6.24	2.09	6.40	2.11	6.57	2.13	6.90	2.16	7.24	2.19
							46	5.46	2.08	5.78	2.11	6.11	2.14	6.27	2.16	6.44	2.17	6.77	2.20	7.11	2.24
2000	2500	2500	3500		10500	150%	10	7.87	1.35	8.18	1.38	8.49	1.41	8.65	1.43	8.81	1.44	9.14	1.47	9.46	1.50
							12	7.73	1.39	8.04	1.42	8.36	1.45	8.52	1.46	8.68	1.48	9.00	1.51	9.33	1.54
							14	7.60	1.43	7.91	1.46	8.22	1.49	8.38	1.50	8.54	1.52	8.87	1.54	9.20	1.57
							16	7.46	1.46	7.77	1.49	8.09	1.52	8.25	1.54	8.41	1.55	8.73	1.58	9.06	1.61
							18	7.33	1.50	7.64	1.53	7.95	1.56	8.11	1.58	8.27	1.59	8.60	1.62	8.93	1.65
							20	7.19	1.54	7.50	1.57	7.82	1.60	7.98	1.62	8.14	1.63	8.47	1.66	8.80	1.69
							21	7.12	1.56	7.44	1.59	7.75	1.62	7.91	1.64	8.07	1.65	8.40	1.68	8.73	1.71
							23	6.99	1.60	7.30	1.63	7.62	1.66	7.78	1.68	7.94	1.69	8.27	1.72	8.60	1.75
							25	6.85	1.64	7.17	1.67	7.49	1.70	7.65	1.72	7.81	1.73	8.14	1.76	8.47	1.79
							27	6.72	1.68	7.03	1.71	7.35	1.74	7.51	1.76	7.68	1.78	8.00	1.81	8.34	1.84
							29	6.59	1.73	6.90	1.76	7.22	1.79	7.38	1.80	7.54	1.82	7.87	1.85	8.21	1.88
							31	6.45	1.77	6.77	1.80	7.09	1.83	7.25	1.85	7.41	1.86	7.74	1.89	8.08	1.92
							33	6.32	1.81	6.64	1.84	6.96	1.87	7.12	1.89	7.28	1.91	7.61	1.94	7.95	1.97
							35	6.19	1.86	6.50	1.89	6.82	1.92	7.00	1.93	7.15	1.95	7.48	1.98	7.82	2.01
							37	6.05	1.90	6.37	1.93	6.69	1.96	6.86	1.98	7.02	2.00	7.35	2.03	7.69	2.06
							39	5.92	1.95	6.24	1.98	6.56	2.01	6.73	2.03	6.89	2.04	7.22	2.07	7.56	2.10
							42	5.73	2.02	6.04	2.05	6.37	2.08	6.53	2.10	6.70	2.11	7.03	2.14	7.37	2.18
							44	5.59	2.06	5.91	2.09	6.24	2.13	6.40	2.14	6.57	2.16	6.90	2.19	7.24	2.22
							46	5.46	2.11	5.78	2.14	6.11	2.17	6.27	2.19	6.44	2.21	6.77	2.24	7.11	2.27
2500	2500	2500	2500		10000	143%	10	7.87	1.33	8.18	1.36	8.49	1.39	8.65	1.40	8.81	1.42	9.14	1.45	9.46	1.48
							12	7.73	1.37	8.04	1.40	8.36	1.43	8.52	1.44	8.68	1.45	9.00	1.48	9.33	1.51
							14	7.60	1.41	7.91	1.43	8.22	1.46	8.38	1.48	8.54	1.49	8.87	1.52	9.20	1.55
							16	7.46	1.44	7.77	1.47	8.09	1.50	8.25	1.51	8.41	1.53	8.73	1.56	9.06	1.59
							18	7.33	1.48	7.64	1.51	7.95	1.54	8.11	1.55	8.27	1.57	8.60	1.60	8.93	1.63
							20	7.19	1.52	7.50	1.55	7.82	1.58	7.98	1.59	8.14	1.61	8.47	1.64	8.80	1.67
							21	7.12	1.54	7.44	1.57	7.75	1.60	7.91	1.61	8.07	1.63	8.40	1.66	8.73	1.69
							23	6.99	1.58	7.30	1.61	7.62	1.64	7.78	1.65	7.94	1.67	8.27	1.70	8.60	1.73
							25	6.85	1.62	7.17	1.65	7.49	1.68	7.65	1.69	7.81	1.71	8.14	1.74	8.47	1.77
							27	6.72	1.66	7.03	1.69	7.35	1.72	7.51	1.73	7.68	1.75	8.00	1.78	8.34	1.81
							29	6.59	1.70	6.90	1.73	7.22	1.76	7.38	1.77	7.54	1.79	7.87	1.82	8.21	1.85
							31	6.45	1.74	6.77	1.77	7.09	1.80	7.25	1.82	7.41	1.83	7.74	1.86	8.08	1.89
							33	6.32	1.78	6.64	1.81	6.96	1.84	7.12	1.86	7.28	1.88	7.61	1.91	7.95	1.94
							35	6.19	1.83	6.50	1.86	6.82	1.89	7.00	1.90	7.15	1.92	7.48	1.95	7.82	1.98
							37	6.05	1.87	6.37	1.90	6.69	1.93	6.86	1.95	7.02	1.96	7.35	2.00	7.69	2.03
							39	5.92	1.92	6.24	1.95	6.56	1.98	6.73	1.99	6.89	2.01	7.22	2.04	7.56	2.07
							42	5.73	1.98	6.04	2.02	6.37	2.05	6.53	2.06	6.70	2.08	7.03	2.11	7.37	2.14
							44	5.59	2.03	5.91	2.06	6.24	2.09	6.40	2.11	6.57	2.13	6.90	2.16	7.24	2.19
							46	5.46	2.08	5.78	2.11	6.11	2.14	6.27	2.16	6.44	2.17	6.77	2.20	7.11	2.24

* All figures comply with EN14511

1. Cooling capacity is based on 27°CDB / 19°CWB (indoor temperature), 35°CDB (outdoor temperature).
2. Heating capacity is based on 20°CDB (indoor temperature), 7°CDB/6°CWB (outdoor temperature).
3. Capacities are based on the following conditions : - Corresponding refrigerant piping length : 5m / - Level difference : 0m
4. The total ability of connected a indoor unit is up to 10.5kW
5. It is impossible to connect the indoor unit for one room only.
6. This data is reference data for temperature capacity trend.

2) Heating

HEATING

Combination (Capacity Index)					Combination (Total)	Combination (%)	Outdoor Temperature (°C, DB)	Indoor Temperature(°C, WB)													
								14		16		18		20		21		22		24	
								TC(kW)	PI(kW)	TC(kW)	PI(kW)	TC(kW)	PI(kW)	TC(kW)	PI(kW)	TC(kW)	PI(kW)	TC(kW)	PI(kW)	TC(kW)	PI(kW)
2000					2000	29%	-15	1.26	0.76	1.22	0.77	1.18	0.78	1.17	0.78	1.15	0.79	1.13	0.79	1.11	0.80
							-10	1.51	0.79	1.47	0.81	1.43	0.82	1.41	0.82	1.40	0.83	1.37	0.83	1.34	0.84
							-5	1.76	0.83	1.71	0.85	1.67	0.86	1.66	0.86	1.64	0.87	1.61	0.88	1.58	0.88
							0	2.01	0.87	1.96	0.89	1.92	0.90	1.90	0.90	1.88	0.91	1.85	0.92	1.82	0.93
							2	2.11	0.89	2.06	0.90	2.02	0.91	2.00	0.92	1.98	0.92	1.95	0.93	1.92	0.94
							7	2.31	0.92	2.26	0.93	2.21	0.95	2.20	0.95	2.17	0.96	2.14	0.97	2.11	0.98
							10	2.51	0.95	2.46	0.96	2.41	0.98	2.39	0.98	2.37	0.99	2.33	1.00	2.30	1.01
							15	2.76	0.99	2.71	1.00	2.66	1.02	2.64	1.02	2.61	1.03	2.57	1.04	2.54	1.05
2500					2500	36%	-15	1.89	0.91	1.83	0.93	1.78	0.94	1.75	0.95	1.73	0.95	1.69	0.96	1.66	0.97
							-10	2.26	0.96	2.20	0.98	2.14	0.99	2.12	1.00	2.09	1.00	2.05	1.01	2.02	1.02
							-5	2.64	1.01	2.57	1.02	2.51	1.04	2.48	1.04	2.46	1.05	2.41	1.06	2.37	1.07
							0	3.01	1.06	2.94	1.07	2.88	1.09	2.85	1.09	2.82	1.10	2.77	1.11	2.73	1.12
							2	3.16	1.08	3.09	1.09	3.03	1.11	3.00	1.11	2.97	1.12	2.92	1.13	2.87	1.14
							7	3.46	1.11	3.39	1.13	3.32	1.14	3.30	1.15	3.26	1.16	3.21	1.17	3.16	1.18
							10	3.76	1.15	3.69	1.17	3.62	1.18	3.59	1.19	3.55	1.20	3.50	1.21	3.45	1.22
							15	4.14	1.20	4.06	1.21	3.99	1.23	3.95	1.24	3.92	1.25	3.86	1.26	3.81	1.27
3500					3500	50%	-15	2.29	1.03	2.22	1.05	2.15	1.06	2.13	1.07	2.10	1.07	2.05	1.08	2.01	1.09
							-10	2.74	1.09	2.67	1.10	2.60	1.12	2.57	1.12	2.54	1.13	2.49	1.14	2.44	1.15
							-5	3.20	1.14	3.12	1.16	3.04	1.17	3.01	1.18	2.98	1.19	2.92	1.20	2.88	1.21
							0	3.65	1.19	3.57	1.21	3.49	1.23	3.46	1.24	3.42	1.24	3.36	1.26	3.31	1.27
							2	3.83	1.22	3.75	1.23	3.67	1.25	3.63	1.26	3.60	1.27	3.54	1.28	3.48	1.29
							7	4.20	1.26	4.11	1.28	4.03	1.29	4.00	1.30	3.95	1.31	3.89	1.32	3.83	1.34
							10	4.56	1.30	4.47	1.32	4.38	1.34	4.35	1.35	4.31	1.35	4.24	1.37	4.18	1.38
							15	5.02	1.35	4.92	1.37	4.83	1.39	4.79	1.40	4.75	1.41	4.68	1.42	4.62	1.44
5000					5000	71%	-15	3.43	1.39	3.33	1.41	3.23	1.43	3.19	1.44	3.15	1.45	3.08	1.46	3.02	1.47
							-10	4.11	1.46	4.00	1.49	3.90	1.51	3.85	1.51	3.81	1.52	3.73	1.54	3.67	1.55
							-5	4.80	1.54	4.67	1.56	4.57	1.58	4.52	1.59	4.47	1.60	4.39	1.61	4.31	1.63
							0	5.48	1.61	5.35	1.63	5.24	1.65	5.18	1.66	5.13	1.67	5.04	1.69	4.97	1.71
							2	5.75	1.64	5.62	1.66	5.50	1.68	5.45	1.69	5.40	1.70	5.31	1.72	5.23	1.74
							7	6.30	1.69	6.16	1.72	6.04	1.74	6.00	1.75	5.93	1.76	5.83	1.78	5.75	1.80
							10	6.84	1.75	6.70	1.78	6.58	1.80	6.52	1.81	6.46	1.82	6.36	1.84	6.27	1.86
							15	7.53	1.82	7.38	1.85	7.25	1.87	7.19	1.88	7.13	1.90	7.02	1.92	6.92	1.93
2000	2000				4000	57%	-15	2.52	0.97	2.44	0.98	2.37	1.00	2.34	1.00	2.31	1.01	2.26	1.02	2.21	1.03
							-10	3.02	1.02	2.93	1.04	2.86	1.05	2.82	1.06	2.79	1.06	2.74	1.07	2.69	1.08
							-5	3.52	1.07	3.43	1.09	3.35	1.10	3.31	1.11	3.28	1.11	3.22	1.13	3.16	1.14
							0	4.02	1.12	3.92	1.14	3.84	1.15	3.80	1.16	3.76	1.17	3.70	1.18	3.64	1.19
							2	4.22	1.14	4.12	1.16	4.04	1.17	4.00	1.18	3.96	1.19	3.89	1.20	3.83	1.21
							7	4.62	1.18	4.52	1.20	4.43	1.21	4.40	1.22	4.35	1.23	4.28	1.24	4.21	1.25
							10	5.02	1.22	4.92	1.24	4.82	1.25	4.78	1.26	4.74	1.27	4.66	1.28	4.60	1.30
							15	5.52	1.27	5.41	1.29	5.32	1.31	5.27	1.31	5.23	1.32	5.15	1.34	5.08	1.35
2000	2500				4500	64%	-15	2.92	1.12	2.83	1.14	2.75	1.15	2.71	1.16	2.68	1.17	2.62	1.18	2.56	1.19
							-10	3.50	1.18	3.40	1.20	3.31	1.21	3.27	1.22	3.24	1.23	3.17	1.24	3.12	1.25
							-5	4.08	1.24	3.97	1.26	3.88	1.27	3.84	1.28	3.80	1.29	3.73	1.30	3.67	1.31
							0	4.66	1.30	4.55	1.31	4.45	1.33	4.41	1.34	4.36	1.35	4.29	1.36	4.22	1.37
							2	4.89	1.32	4.78	1.34	4.68	1.36	4.63	1.36	4.59	1.37	4.51	1.39	4.44	1.40
							7	5.35	1.36	5.24	1.38	5.13	1.40	5.10	1.41	5.04	1.42	4.96	1.44	4.89	1.45
							10	5.82	1.41	5.70	1.43	5.59	1.45	5.54	1.46	5.49	1.47	5.41	1.48	5.33	1.50
							15	6.40	1.47	6.28	1.49	6.16	1.51	6.11	1.52	6.06	1.53	5.97	1.54	5.88	1.56
2000	3500				5500	79%	-15	3.43	1.40	3.33	1.42	3.23	1.44	3.19	1.45	3.15	1.45	3.08	1.47	3.02	1.48
							-10	4.11	1.47	4.00	1.49	3.90	1.51	3.85	1.52	3.81	1.53	3.73	1.55	3.67	1.56
							-5	4.80	1.55	4.67	1.57	4.57	1.59	4.52	1.60	4.47	1.61	4.39	1.62	4.31	1.64
							0	5.48	1.62	5.35	1.64	5.24	1.66	5.18	1.67	5.13	1.68	5.04	1.70	4.97	1.72
							2	5.75	1.65	5.62	1.67	5.50	1.69	5.45	1.70	5.40	1.71	5.31	1.73	5.23	1.75
							7	6.30	1.70	6.16	1.73	6.04	1.75	6.00	1.76	5.93	1.77	5.83	1.79	5.75	1.81
							10	6.84	1.76	6.70	1.79	6.58	1.81	6.52	1.82	6.46	1.83	6.36	1.85	6.27	1.87
							15	7.53	1.83	7.38	1.86	7.25	1.88	7.19	1.89	7.13	1.91	7.02	1.93	6.92	1.95
2000	5000				7000	100%	-15	4.47	1.72	4.33	1.74	4.20	1.77	4.14	1.78	4.09	1.79	4.00	1.80	3.92	1.82
							-10	5.35	1.81	5.20	1.83	5.07	1.86	5.01	1.87	4.95	1.88	4.85	1.90	4.77	1.91
							-5	6.23	1.90	6.08	1.92	5.94	1.95	5.87	1.96	5.81	1.97	5.70	1.99	5.61	2.01
							0	7.12	1.98	6.96	2.01	6.81	2.04	6.74	2.05	6.67	2.07	6.56	2.09	6.45	2.11
							2	7.47	2.02	7.31	2.05	7.15	2.08	7.08	2.09	7.02	2.10	6.90	2.12	6.79	2.14
							7	8.19	2.09	8.01	2.12	7.85	2.15	7.80	2.16	7.71	2.18	7.58	2.20	7.47	2.22
							10	8.90	2.16	8.72	2.19	8.55	2.22	8.47	2.24	8.40	2.25	8.27	2.27	8.15	2.29
							15	9.79	2.25	9.60	2.28	9.43	2.31	9.34	2.33	9.27	2.34	9.13	2.36	9.00	2.39
2500	2500				5000	71%	-15	3.32	1.27	3.22	1.29	3.12	1.31	3.08	1.32	3.04	1.32	2.97	1.34	2.92	1.35
							-10	3.98	1.34	3.87	1.36	3.77	1.38	3.72	1.38	3.68	1.39	3.61	1.41	3.54	1.42
							-5	4.64	1.40	4.52	1.43	4.41	1.44	4.37	1.45	4.32	1.46	4.24	1.48	4.17	1.49
							0	5.29	1.47	5.17	1.49	5.06	1.51	5.01	1.52	4.96	1.53	4.88	1.55	4.80	1.56
							2	5.56	1.50	5.43	1.52	5.32	1.54	5.27	1.55	5.22	1.56	5.13	1.57	5.05	1.59
							7	6.09	1.55	5.96	1.57	5.84	1.59	5.80	1.60	5.73	1.61	5.64	1.63	5.56	1.64
							10	6.62	1.60	6.48	1.62	6.36	1.65	6.30	1.66	6.25	1.67	6.15	1.68	6.06	1.70
							15	7.28	1.66	7.14	1.69	7.01	1.71	6.95	1.72	6.89	1.73	6.79	1.75	6.69	1.77

* All figures comply with EN14511

1. Cooling capacity is based on 27°CDB / 19°CWB (indoor temperature), 35°CDB (outdoor temperature).
2. Heating capacity is based on 20°CDB (indoor temperature), 7°CDB/6°CWB (outdoor temperature).
3. Capacities are based on the following conditions : - Corresponding refrigerant piping length : 5m / - Level difference : 0m
4. The total ability of connected a indoor unit is up to 10.5kW
5. It is impossible to connect the indoor unit for one room only.
6. This data is reference data for temperature capacity trend.

5 AJ070FCJ4EH

2) Heating

	Combination (Capacity Index)					Combination (Total)	Combination (%)	Outdoor Temperature (°C, DB)	Indoor Temperature(°C, WB)													
									14		16		18		20		21		22		24	
									TC(kW)	PI(kW)	TC(kW)	PI(kW)	TC(kW)	PI(kW)	TC(kW)	PI(kW)	TC(kW)	PI(kW)	TC(kW)	PI(kW)	TC(kW)	PI(kW)
HEATING	2500	3500				6000	86%	-15	3.84	1.54	3.72	1.57	3.61	1.59	3.56	1.59	3.52	1.60	3.44	1.62	3.37	1.63
								-10	4.59	1.62	4.47	1.65	4.35	1.67	4.30	1.68	4.25	1.69	4.17	1.70	4.09	1.72
								-5	5.35	1.70	5.22	1.73	5.10	1.75	5.04	1.76	4.99	1.77	4.90	1.79	4.82	1.81
								0	6.12	1.78	5.97	1.81	5.85	1.83	5.79	1.84	5.73	1.86	5.63	1.87	5.54	1.89
								2	6.42	1.81	6.28	1.84	6.15	1.87	6.09	1.88	6.03	1.89	5.93	1.91	5.84	1.93
								7	7.03	1.88	6.88	1.91	6.74	1.93	6.70	1.94	6.62	1.95	6.51	1.97	6.42	1.99
								10	7.64	1.94	7.49	1.97	7.34	2.00	7.28	2.01	7.22	2.02	7.10	2.04	7.00	2.06
								15	8.41	2.02	8.24	2.05	8.10	2.08	8.03	2.09	7.96	2.10	7.84	2.12	7.73	2.14
	2500	5000				7500	107%	-15	4.47	1.72	4.33	1.74	4.20	1.77	4.14	1.78	4.09	1.79	4.00	1.80	3.92	1.82
								-10	5.35	1.81	5.20	1.83	5.07	1.86	5.01	1.87	4.95	1.88	4.85	1.90	4.77	1.91
								-5	6.23	1.90	6.08	1.92	5.94	1.95	5.87	1.96	5.81	1.97	5.70	1.99	5.61	2.01
								0	7.12	1.98	6.96	2.01	6.81	2.04	6.74	2.05	6.67	2.07	6.56	2.09	6.45	2.11
								2	7.47	2.02	7.31	2.05	7.15	2.08	7.08	2.09	7.02	2.10	6.90	2.12	6.79	2.14
								7	8.19	2.09	8.01	2.12	7.85	2.15	7.80	2.16	7.71	2.18	7.58	2.20	7.47	2.22
								10	8.90	2.16	8.72	2.19	8.55	2.22	8.47	2.24	8.40	2.25	8.27	2.27	8.15	2.29
								15	9.79	2.25	9.60	2.28	9.43	2.31	9.34	2.33	9.27	2.34	9.13	2.36	9.00	2.39
	3500	3500				7000	100%	-15	4.35	1.73	4.21	1.76	4.09	1.78	4.04	1.79	3.99	1.80	3.90	1.82	3.82	1.83
								-10	5.21	1.82	5.07	1.85	4.94	1.88	4.88	1.89	4.82	1.90	4.73	1.92	4.64	1.93
								-5	6.07	1.91	5.92	1.94	5.78	1.97	5.72	1.98	5.66	1.99	5.56	2.01	5.47	2.03
								0	6.94	2.00	6.78	2.03	6.63	2.06	6.57	2.07	6.50	2.08	6.39	2.11	6.29	2.12
								2	7.28	2.04	7.12	2.07	6.97	2.10	6.90	2.11	6.84	2.12	6.72	2.14	6.62	2.16
								7	7.98	2.11	7.81	2.14	7.65	2.17	7.60	2.18	7.51	2.20	7.39	2.22	7.28	2.24
								10	8.67	2.18	8.49	2.21	8.33	2.24	8.26	2.26	8.19	2.27	8.06	2.29	7.94	2.32
								15	9.54	2.27	9.35	2.30	9.18	2.33	9.10	2.35	9.03	2.36	8.89	2.39	8.77	2.41
	3500	5000				8500	121%	-15	4.65	1.79	4.50	1.82	4.37	1.84	4.31	1.85	4.26	1.86	4.16	1.88	4.08	1.89
								-10	5.57	1.88	5.41	1.91	5.28	1.94	5.21	1.95	5.15	1.96	5.05	1.98	4.96	1.99
								-5	6.49	1.98	6.33	2.00	6.18	2.03	6.11	2.04	6.05	2.05	5.94	2.08	5.84	2.09
								0	7.41	2.07	7.24	2.10	7.09	2.13	7.01	2.14	6.95	2.15	6.83	2.17	6.72	2.19
								2	7.78	2.10	7.61	2.14	7.45	2.16	7.38	2.18	7.31	2.19	7.18	2.21	7.07	2.23
								7	8.52	2.18	8.34	2.21	8.17	2.24	8.12	2.25	8.03	2.27	7.89	2.29	7.78	2.31
								10	9.26	2.25	9.07	2.28	8.90	2.31	8.82	2.33	8.75	2.34	8.61	2.37	8.48	2.39
								15	10.19	2.34	9.99	2.38	9.81	2.41	9.73	2.42	9.65	2.44	9.50	2.46	9.37	2.49
	5000	5000				10000	143%	-15	4.87	1.79	4.71	1.82	4.58	1.84	4.52	1.85	4.46	1.86	4.36	1.88	4.27	1.89
								-10	5.83	1.88	5.67	1.91	5.52	1.94	5.46	1.95	5.40	1.96	5.29	1.98	5.19	1.99
								-5	6.79	1.98	6.62	2.00	6.47	2.03	6.40	2.04	6.33	2.05	6.21	2.08	6.11	2.09
								0	7.76	2.07	7.58	2.10	7.42	2.13	7.34	2.14	7.27	2.15	7.14	2.17	7.03	2.19
								2	8.15	2.10	7.96	2.14	7.80	2.16	7.72	2.18	7.65	2.19	7.52	2.21	7.40	2.23
								7	8.92	2.18	8.73	2.21	8.56	2.24	8.50	2.25	8.40	2.27	8.26	2.29	8.14	2.31
								10	9.70	2.25	9.50	2.28	9.32	2.31	9.23	2.33	9.16	2.34	9.01	2.37	8.88	2.39
								15	10.67	2.34	10.46	2.38	10.27	2.41	10.18	2.42	10.10	2.44	9.95	2.46	9.81	2.49
	2000	2000	2000			6000	86%	-15	3.78	1.45	3.66	1.48	3.55	1.50	3.51	1.50	3.46	1.51	3.38	1.53	3.32	1.54
								-10	4.53	1.53	4.40	1.55	4.29	1.57	4.24	1.58	4.19	1.59	4.10	1.61	4.03	1.62
								-5	5.27	1.61	5.14	1.63	5.02	1.65	4.97	1.66	4.92	1.67	4.83	1.69	4.75	1.70
								0	6.02	1.68	5.89	1.71	5.76	1.73	5.70	1.74	5.65	1.75	5.55	1.77	5.46	1.78
								2	6.32	1.71	6.18	1.74	6.05	1.76	5.99	1.77	5.94	1.78	5.84	1.80	5.75	1.82
								7	6.93	1.77	6.78	1.80	6.64	1.82	6.60	1.83	6.52	1.84	6.42	1.86	6.32	1.88
								10	7.53	1.83	7.37	1.86	7.24	1.88	7.17	1.89	7.11	1.91	7.00	1.93	6.90	1.94
								15	8.28	1.90	8.12	1.93	7.98	1.96	7.91	1.97	7.84	1.98	7.72	2.00	7.62	2.02
	2000	2000	2500			6500	93%	-15	4.18	1.49	4.05	1.52	3.93	1.54	3.88	1.55	3.83	1.55	3.74	1.57	3.67	1.58
								-10	5.01	1.57	4.87	1.60	4.74	1.62	4.69	1.63	4.63	1.64	4.54	1.65	4.46	1.67
								-5	5.83	1.65	5.69	1.67	5.56	1.70	5.50	1.71	5.44	1.72	5.34	1.73	5.25	1.75
								0	6.66	1.73	6.51	1.75	6.37	1.78	6.31	1.79	6.25	1.80	6.14	1.82	6.04	1.83
								2	7.00	1.76	6.84	1.78	6.70	1.81	6.63	1.82	6.57	1.83	6.46	1.85	6.36	1.87
								7	7.66	1.82	7.50	1.85	7.35	1.87	7.30	1.88	7.22	1.89	7.10	1.91	6.99	1.93
								10	8.33	1.88	8.16	1.91	8.00	1.93	7.93	1.95	7.86	1.96	7.74	1.98	7.63	2.00
								15	9.16	1.96	8.98	1.98	8.82	2.01	8.75	2.02	8.67	2.04	8.54	2.06	8.42	2.08
	2000	2000	3500			7500	107%	-15	4.69	1.53	4.55	1.56	4.42	1.58	4.36	1.59	4.30	1.60	4.20	1.61	4.12	1.62
								-10	5.62	1.61	5.47	1.64	5.33	1.66	5.26	1.67	5.21	1.68	5.10	1.70	5.01	1.71
								-5	6.55	1.69	6.39	1.72	6.24	1.74	6.17	1.75	6.11	1.76	5.99	1.78	5.90	1.80
								0	7.48	1.77	7.31	1.80	7.16	1.82	7.08	1.83	7.02	1.85	6.89	1.86	6.79	1.88
								2	7.86	1.80	7.68	1.83	7.52	1.86	7.45	1.87	7.38	1.88	7.25	1.90	7.14	1.92
								7	8.61	1.87	8.42	1.90	8.25	1.92	8.20	1.93	8.10	1.94	7.97	1.96	7.85	1.98
								10	9.35	1.93	9.16	1.96	8.99	1.99	8.91	2.00	8.83	2.01	8.69	2.03	8.57	2.05
								15	10.29	2.01	10.09	2.04	9.91	2.07	9.82	2.08	9.74	2.09	9.59	2.11	9.46	2.13
	2000	2000	5000			9000	129%	-15	4.92	1.56	4.77	1.58	4.63	1.60	4.57	1.61	4.51	1.62	4.41	1.64	4.33	1.65
								-10	5.90	1.64	5.73	1.66	5.59	1.69	5.52	1.70	5.46	1.71	5.35	1.72	5.25	1.74
								-5	6.87	1.72	6.70	1.75	6.55	1.77	6.47	1.78	6.41	1.79	6.29	1.81	6.18	1.82
								0	7.85	1.80	7.67	1.83	7.50	1.85	7.43	1.86	7.36	1.87	7.23	1.89	7.12	1.91
								2	8.24	1.83	8.06	1.86	7.89	1.89	7.81	1.90	7.74	1.91	7.61	1.93	7.49	1.95
								7	9.02	1.90	8.83	1.92	8.66	1.95	8.60	1.96	8.50	1.97	8.36	2.00	8.24	2.01
								10	9.81	1.96	9.61	1.99	9.43	2.02	9.34	2.03	9.26	2.04	9.12	2.06	8.99	2.08
								15	10.79	2.04	10.58	2.07	10.39	2.10	10.30	2.11	10.22	2.12	10.06	2.15	9.92	2.17

* All figures comply with EN14511

1. Cooling capacity is based on 27°CDB / 19°CWB (indoor temperature), 35°CDB (outdoor temperature).
2. Heating capacity is based on 20°CDB (indoor temperature), 7°CDB/6°CWB (outdoor temperature).
3. Capacities are based on the following conditions : - Corresponding refrigerant piping length : 5m / - Level difference : 0m
4. The total ability of connected a indoor unit is up to 10.5kW
5. It is impossible to connect the indoor unit for one room only.
6. This data is reference data for temperature capacity trend.

2) Heating

HEATING

Combination (Capacity Index)					Combination (Total)	Combination (%)	Outdoor Temperature (°C, DB)	Indoor Temperature(°C, WB)													
								14		16		18		20		21		22		24	
								TC(kW)	PI(kW)	TC(kW)	PI(kW)	TC(kW)	PI(kW)	TC(kW)	PI(kW)	TC(kW)	PI(kW)	TC(kW)	PI(kW)	TC(kW)	PI(kW)
2000	2500	2500			7000	100%	-15	4.58	1.51	4.44	1.53	4.31	1.55	4.25	1.56	4.20	1.57	4.10	1.59	4.02	1.60
							-10	5.49	1.59	5.33	1.61	5.20	1.63	5.14	1.64	5.08	1.65	4.97	1.67	4.89	1.68
							-5	6.39	1.67	6.23	1.69	6.09	1.72	6.02	1.73	5.96	1.74	5.85	1.75	5.75	1.77
							0	7.30	1.75	7.13	1.77	6.98	1.80	6.91	1.81	6.84	1.82	6.72	1.84	6.62	1.85
							2	7.67	1.78	7.49	1.80	7.34	1.83	7.27	1.84	7.20	1.85	7.07	1.87	6.97	1.89
							7	8.40	1.84	8.22	1.87	8.05	1.89	8.00	1.90	7.91	1.91	7.78	1.93	7.66	1.95
							10	9.12	1.90	8.94	1.93	8.77	1.95	8.69	1.97	8.62	1.98	8.48	2.00	8.36	2.02
							15	10.04	1.98	9.84	2.01	9.67	2.03	9.58	2.05	9.51	2.06	9.36	2.08	9.23	2.10
2000	2500	3500			8000	114%	-15	4.73	1.53	4.58	1.56	4.45	1.58	4.39	1.59	4.33	1.60	4.24	1.61	4.15	1.62
							-10	5.66	1.61	5.51	1.64	5.37	1.66	5.30	1.67	5.24	1.68	5.14	1.70	5.05	1.71
							-5	6.60	1.69	6.44	1.72	6.29	1.74	6.22	1.75	6.15	1.76	6.04	1.78	5.94	1.80
							0	7.54	1.77	7.37	1.80	7.21	1.82	7.14	1.83	7.07	1.85	6.94	1.86	6.84	1.88
							2	7.92	1.80	7.74	1.83	7.58	1.86	7.50	1.87	7.43	1.88	7.30	1.90	7.19	1.92
							7	8.67	1.87	8.48	1.90	8.32	1.92	8.26	1.93	8.16	1.94	8.03	1.96	7.91	1.98
							10	9.42	1.93	9.23	1.96	9.05	1.99	8.97	2.00	8.90	2.01	8.76	2.03	8.63	2.05
							15	10.36	2.01	10.16	2.04	9.98	2.07	9.90	2.08	9.81	2.09	9.66	2.11	9.53	2.13
2000	2500	5000			9500	136%	-15	4.92	1.57	4.77	1.59	4.63	1.61	4.57	1.62	4.51	1.63	4.41	1.64	4.33	1.66
							-10	5.90	1.65	5.73	1.67	5.59	1.69	5.52	1.70	5.46	1.71	5.35	1.73	5.25	1.75
							-5	6.87	1.73	6.70	1.76	6.55	1.78	6.47	1.79	6.41	1.80	6.29	1.82	6.18	1.83
							0	7.85	1.81	7.67	1.84	7.50	1.86	7.43	1.87	7.36	1.88	7.23	1.90	7.12	1.92
							2	8.24	1.84	8.06	1.87	7.89	1.89	7.81	1.91	7.74	1.92	7.61	1.94	7.49	1.95
							7	9.02	1.91	8.83	1.93	8.66	1.96	8.60	1.97	8.50	1.98	8.36	2.01	8.24	2.02
							10	9.81	1.97	9.61	2.00	9.43	2.03	9.34	2.04	9.26	2.05	9.12	2.07	8.99	2.09
							15	10.79	2.05	10.58	2.08	10.39	2.11	10.30	2.12	10.22	2.13	10.06	2.16	9.92	2.18
2000	3500	3500			9000	129%	-15	4.77	1.55	4.62	1.57	4.49	1.59	4.43	1.60	4.38	1.61	4.28	1.63	4.19	1.64
							-10	5.72	1.63	5.56	1.66	5.42	1.68	5.35	1.69	5.29	1.70	5.19	1.71	5.10	1.73
							-5	6.67	1.71	6.50	1.74	6.35	1.76	6.28	1.77	6.21	1.78	6.10	1.80	6.00	1.81
							0	7.61	1.79	7.44	1.82	7.28	1.84	7.20	1.85	7.14	1.86	7.01	1.88	6.90	1.90
							2	7.99	1.82	7.81	1.85	7.65	1.88	7.58	1.89	7.50	1.90	7.38	1.92	7.26	1.94
							7	8.75	1.89	8.57	1.92	8.40	1.94	8.34	1.95	8.24	1.96	8.11	1.99	7.99	2.00
							10	9.51	1.95	9.32	1.98	9.14	2.01	9.06	2.02	8.98	2.03	8.84	2.05	8.71	2.07
							15	10.47	2.03	10.26	2.06	10.08	2.09	9.99	2.10	9.91	2.11	9.76	2.14	9.62	2.16
2000	3500	5000			10500	150%	-15	4.92	1.59	4.77	1.61	4.63	1.63	4.57	1.64	4.51	1.65	4.41	1.67	4.33	1.68
							-10	5.90	1.67	5.73	1.70	5.59	1.72	5.52	1.73	5.46	1.74	5.35	1.76	5.25	1.77
							-5	6.87	1.76	6.70	1.78	6.55	1.81	6.47	1.82	6.41	1.83	6.29	1.85	6.18	1.86
							0	7.85	1.84	7.67	1.87	7.50	1.89	7.43	1.90	7.36	1.91	7.23	1.93	7.12	1.95
							2	8.24	1.87	8.06	1.90	7.89	1.92	7.81	1.94	7.74	1.95	7.61	1.97	7.49	1.98
							7	9.02	1.94	8.83	1.96	8.66	1.99	8.60	2.00	8.50	2.01	8.36	2.04	8.24	2.05
							10	9.81	2.00	9.61	2.03	9.43	2.06	9.34	2.07	9.26	2.08	9.12	2.10	8.99	2.12
							15	10.79	2.08	10.58	2.11	10.39	2.14	10.30	2.15	10.22	2.17	10.06	2.19	9.92	2.21
2500	2500	2500			7500	107%	-15	4.72	1.53	4.57	1.56	4.44	1.58	4.38	1.59	4.33	1.60	4.23	1.61	4.15	1.62
							-10	5.66	1.61	5.50	1.64	5.36	1.66	5.30	1.67	5.24	1.68	5.13	1.70	5.04	1.71
							-5	6.59	1.69	6.43	1.72	6.28	1.74	6.21	1.75	6.15	1.76	6.03	1.78	5.93	1.80
							0	7.53	1.77	7.36	1.80	7.20	1.82	7.13	1.83	7.06	1.85	6.93	1.86	6.83	1.88
							2	7.91	1.80	7.73	1.83	7.57	1.86	7.49	1.87	7.42	1.88	7.30	1.90	7.19	1.92
							7	8.66	1.87	8.47	1.90	8.31	1.92	8.25	1.93	8.15	1.94	8.02	1.96	7.90	1.98
							10	9.41	1.93	9.22	1.96	9.04	1.99	8.96	2.00	8.89	2.01	8.74	2.03	8.62	2.05
							15	10.35	2.01	10.15	2.04	9.97	2.07	9.88	2.08	9.80	2.09	9.65	2.11	9.52	2.13
2500	2500	3500			8500	121%	-15	4.77	1.55	4.62	1.57	4.49	1.59	4.43	1.60	4.37	1.61	4.27	1.63	4.19	1.64
							-10	5.71	1.63	5.55	1.66	5.41	1.68	5.35	1.69	5.29	1.70	5.18	1.71	5.09	1.73
							-5	6.66	1.71	6.49	1.74	6.34	1.76	6.27	1.77	6.21	1.78	6.09	1.80	5.99	1.81
							0	7.60	1.79	7.43	1.82	7.27	1.84	7.20	1.85	7.13	1.86	7.00	1.88	6.89	1.90
							2	7.98	1.82	7.80	1.85	7.64	1.88	7.57	1.89	7.50	1.90	7.37	1.92	7.26	1.94
							7	8.74	1.89	8.56	1.92	8.39	1.94	8.33	1.95	8.23	1.96	8.10	1.99	7.98	2.00
							10	9.50	1.95	9.31	1.98	9.13	2.01	9.05	2.02	8.97	2.03	8.83	2.05	8.70	2.07
							15	10.45	2.03	10.25	2.06	10.07	2.09	9.98	2.10	9.90	2.11	9.75	2.14	9.61	2.16
2500	2500	5000			10000	143%	-15	4.92	1.57	4.77	1.60	4.63	1.62	4.57	1.63	4.51	1.64	4.41	1.65	4.33	1.67
							-10	5.90	1.66	5.73	1.68	5.59	1.70	5.52	1.71	5.46	1.72	5.35	1.74	5.25	1.75
							-5	6.87	1.74	6.70	1.76	6.55	1.79	6.47	1.80	6.41	1.81	6.29	1.83	6.18	1.84
							0	7.85	1.82	7.67	1.85	7.50	1.87	7.43	1.88	7.36	1.89	7.23	1.91	7.12	1.93
							2	8.24	1.85	8.06	1.88	7.89	1.90	7.81	1.92	7.74	1.93	7.61	1.95	7.49	1.96
							7	9.02	1.92	8.83	1.94	8.66	1.97	8.60	1.98	8.50	1.99	8.36	2.02	8.24	2.03
							10	9.81	1.98	9.61	2.01	9.43	2.04	9.34	2.05	9.26	2.06	9.12	2.08	8.99	2.10
							15	10.79	2.06	10.58	2.09	10.39	2.12	10.30	2.13	10.22	2.14	10.06	2.17	9.92	2.19
2500	3500	3500			9500	136%	-15	4.92	1.57	4.77	1.60	4.63	1.62	4.57	1.63	4.51	1.64	4.41	1.65	4.33	1.67
							-10	5.90	1.66	5.73	1.68	5.59	1.70	5.52	1.71	5.46	1.72	5.35	1.74	5.25	1.75
							-5	6.87	1.74	6.70	1.76	6.55	1.79	6.47	1.80	6.41	1.81	6.29	1.83	6.18	1.84
							0	7.85	1.82	7.67	1.85	7.50	1.87	7.43	1.88	7.36	1.89	7.23	1.91	7.12	1.93
							2	8.24	1.85	8.06	1.88	7.89	1.90	7.81	1.92	7.74	1.93	7.61	1.95	7.49	1.96
							7	9.02	1.92	8.83	1.94	8.66	1.97	8.60	1.98	8.50	1.99	8.36	2.02	8.24	2.03
							10	9.81	1.98	9.61	2.01	9.43	2.04	9.34	2.05	9.26	2.06	9.12	2.08	8.99	2.10
							15	10.79	2.06	10.58	2.09	10.39	2.12	10.30	2.13	10.22	2.14	10.06	2.17	9.92	2.19

* All figures comply with EN14511

1. Cooling capacity is based on 27°CDB / 19°CWB (indoor temperature), 35°CDB (outdoor temperature).
2. Heating capacity is based on 20°CDB (indoor temperature), 7°CDB/6°CWB (outdoor temperature).
3. Capacities are based on the following conditions : - Corresponding refrigerant piping length : 5m / - Level difference : 0m
4. The total ability of connected a indoor unit is up to 10.5kW
5. It is impossible to connect the indoor unit for one room only.
6. This data is reference data for temperature capacity trend.

5 AJ070FCJ4EH

2) Heating

HEATING

Combination (Capacity Index)					Combination (Total)	Combination (%)	Outdoor Temperature (°C, DB)	Indoor Temperature(°C, WB)													
								14		16		18		20		21		22		24	
								TC(kW)	PI(kW)	TC(kW)	PI(kW)	TC(kW)	PI(kW)	TC(kW)	PI(kW)	TC(kW)	PI(kW)	TC(kW)	PI(kW)	TC(kW)	PI(kW)
3500	3500	3500			10500	150%	-15	4.92	1.59	4.77	1.61	4.63	1.63	4.57	1.64	4.51	1.65	4.41	1.67	4.33	1.68
							-10	5.90	1.67	5.73	1.70	5.59	1.72	5.52	1.73	5.46	1.74	5.35	1.76	5.25	1.77
							-5	6.87	1.76	6.70	1.78	6.55	1.81	6.47	1.82	6.41	1.83	6.29	1.85	6.18	1.86
							0	7.85	1.84	7.67	1.87	7.50	1.89	7.43	1.90	7.36	1.91	7.23	1.93	7.12	1.95
							2	8.24	1.87	8.06	1.90	7.89	1.92	7.81	1.94	7.74	1.95	7.61	1.97	7.49	1.98
							7	9.02	1.94	8.83	1.96	8.66	1.99	8.60	2.00	8.50	2.01	8.36	2.04	8.24	2.05
							10	9.81	2.00	9.61	2.03	9.43	2.06	9.34	2.07	9.26	2.08	9.12	2.10	8.99	2.12
							15	10.79	2.08	10.58	2.11	10.39	2.14	10.30	2.15	10.22	2.17	10.06	2.19	9.92	2.21
2000	2000	2000	2000		8000	114%	-15	4.72	1.53	4.57	1.56	4.44	1.58	4.38	1.59	4.33	1.60	4.23	1.61	4.15	1.62
							-10	5.66	1.61	5.50	1.64	5.36	1.66	5.30	1.67	5.24	1.68	5.13	1.70	5.04	1.71
							-5	6.59	1.69	6.43	1.72	6.28	1.74	6.21	1.75	6.15	1.76	6.03	1.78	5.93	1.80
							0	7.53	1.77	7.36	1.80	7.20	1.82	7.13	1.83	7.06	1.85	6.93	1.86	6.83	1.88
							2	7.91	1.80	7.73	1.83	7.57	1.86	7.49	1.87	7.42	1.88	7.30	1.90	7.19	1.92
							7	8.66	1.87	8.47	1.90	8.31	1.92	8.25	1.93	8.15	1.94	8.02	1.96	7.90	1.98
							10	9.41	1.93	9.22	1.96	9.04	1.99	8.96	2.00	8.89	2.01	8.74	2.03	8.62	2.05
							15	10.35	2.01	10.15	2.04	9.97	2.07	9.88	2.08	9.80	2.09	9.65	2.11	9.52	2.13
2000	2000	2000	2500		8500	121%	-15	4.76	1.55	4.61	1.57	4.48	1.59	4.42	1.60	4.37	1.61	4.27	1.63	4.18	1.64
							-10	5.71	1.63	5.55	1.66	5.41	1.68	5.34	1.69	5.28	1.70	5.17	1.71	5.08	1.73
							-5	6.65	1.71	6.48	1.74	6.33	1.76	6.26	1.77	6.20	1.78	6.08	1.80	5.98	1.81
							0	7.59	1.79	7.42	1.82	7.26	1.84	7.19	1.85	7.12	1.86	6.99	1.88	6.89	1.90
							2	7.97	1.82	7.79	1.85	7.63	1.88	7.56	1.89	7.49	1.90	7.36	1.92	7.25	1.94
							7	8.73	1.89	8.54	1.92	8.38	1.94	8.32	1.95	8.22	1.96	8.09	1.99	7.97	2.00
							10	9.49	1.95	9.30	1.98	9.12	2.01	9.04	2.02	8.96	2.03	8.82	2.05	8.69	2.07
							15	10.44	2.03	10.24	2.06	10.05	2.09	9.97	2.10	9.89	2.11	9.73	2.14	9.60	2.16
2000	2000	2000	3500		9500	136%	-15	4.92	1.59	4.77	1.61	4.63	1.63	4.57	1.64	4.51	1.65	4.41	1.67	4.33	1.68
							-10	5.90	1.67	5.73	1.70	5.59	1.72	5.52	1.73	5.46	1.74	5.35	1.76	5.25	1.77
							-5	6.87	1.76	6.70	1.78	6.55	1.81	6.47	1.82	6.41	1.83	6.29	1.85	6.18	1.86
							0	7.85	1.84	7.67	1.87	7.50	1.89	7.43	1.90	7.36	1.91	7.23	1.93	7.12	1.95
							2	8.24	1.87	8.06	1.90	7.89	1.92	7.81	1.94	7.74	1.95	7.61	1.97	7.49	1.98
							7	9.02	1.94	8.83	1.96	8.66	1.99	8.60	2.00	8.50	2.01	8.36	2.04	8.24	2.05
							10	9.81	2.00	9.61	2.03	9.43	2.06	9.34	2.07	9.26	2.08	9.12	2.10	8.99	2.12
							15	10.79	2.08	10.58	2.11	10.39	2.14	10.30	2.15	10.22	2.17	10.06	2.19	9.92	2.21
2000	2000	2500	2500		9000	129%	-15	4.92	1.57	4.77	1.59	4.63	1.61	4.57	1.62	4.51	1.63	4.41	1.64	4.33	1.66
							-10	5.90	1.65	5.73	1.67	5.59	1.69	5.52	1.70	5.46	1.71	5.35	1.73	5.25	1.75
							-5	6.87	1.73	6.70	1.76	6.55	1.78	6.47	1.79	6.41	1.80	6.29	1.82	6.18	1.83
							0	7.85	1.81	7.67	1.84	7.50	1.86	7.43	1.87	7.36	1.88	7.23	1.90	7.12	1.92
							2	8.24	1.84	8.06	1.87	7.89	1.89	7.81	1.91	7.74	1.92	7.61	1.94	7.49	1.95
							7	9.02	1.91	8.83	1.93	8.66	1.96	8.60	1.97	8.50	1.98	8.36	2.01	8.24	2.02
							10	9.81	1.97	9.61	2.00	9.43	2.03	9.34	2.04	9.26	2.05	9.12	2.07	8.99	2.09
							15	10.79	2.05	10.58	2.08	10.39	2.11	10.30	2.12	10.22	2.13	10.06	2.16	9.92	2.18
2000	2000	2500	3500		10000	143%	-15	4.92	1.59	4.77	1.61	4.63	1.63	4.57	1.64	4.51	1.65	4.41	1.67	4.33	1.68
							-10	5.90	1.67	5.73	1.70	5.59	1.72	5.52	1.73	5.46	1.74	5.35	1.76	5.25	1.77
							-5	6.87	1.76	6.70	1.78	6.55	1.81	6.47	1.82	6.41	1.83	6.29	1.85	6.18	1.86
							0	7.85	1.84	7.67	1.87	7.50	1.89	7.43	1.90	7.36	1.91	7.23	1.93	7.12	1.95
							2	8.24	1.87	8.06	1.90	7.89	1.92	7.81	1.94	7.74	1.95	7.61	1.97	7.49	1.98
							7	9.02	1.94	8.83	1.96	8.66	1.99	8.60	2.00	8.50	2.01	8.36	2.04	8.24	2.05
							10	9.81	2.00	9.61	2.03	9.43	2.06	9.34	2.07	9.26	2.08	9.12	2.10	8.99	2.12
							15	10.79	2.08	10.58	2.11	10.39	2.14	10.30	2.15	10.22	2.17	10.06	2.19	9.92	2.21
2000	2500	2500	2500		9500	136%	-15	4.92	1.59	4.77	1.61	4.63	1.63	4.57	1.64	4.51	1.65	4.41	1.67	4.33	1.68
							-10	5.90	1.67	5.73	1.70	5.59	1.72	5.52	1.73	5.46	1.74	5.35	1.76	5.25	1.77
							-5	6.87	1.76	6.70	1.78	6.55	1.81	6.47	1.82	6.41	1.83	6.29	1.85	6.18	1.86
							0	7.85	1.84	7.67	1.87	7.50	1.89	7.43	1.90	7.36	1.91	7.23	1.93	7.12	1.95
							2	8.24	1.87	8.06	1.90	7.89	1.92	7.81	1.94	7.74	1.95	7.61	1.97	7.49	1.98
							7	9.02	1.94	8.83	1.96	8.66	1.99	8.60	2.00	8.50	2.01	8.36	2.04	8.24	2.05
							10	9.81	2.00	9.61	2.03	9.43	2.06	9.34	2.07	9.26	2.08	9.12	2.10	8.99	2.12
							15	10.79	2.08	10.58	2.11	10.39	2.14	10.30	2.15	10.22	2.17	10.06	2.19	9.92	2.21
2000	2500	2500	3500		10500	150%	-15	4.92	1.59	4.77	1.61	4.63	1.63	4.57	1.64	4.51	1.65	4.41	1.67	4.33	1.68
							-10	5.90	1.67	5.73	1.70	5.59	1.72	5.52	1.73	5.46	1.74	5.35	1.76	5.25	1.77
							-5	6.87	1.76	6.70	1.78	6.55	1.81	6.47	1.82	6.41	1.83	6.29	1.85	6.18	1.86
							0	7.85	1.84	7.67	1.87	7.50	1.89	7.43	1.90	7.36	1.91	7.23	1.93	7.12	1.95
							2	8.24	1.87	8.06	1.90	7.89	1.92	7.81	1.94	7.74	1.95	7.61	1.97	7.49	1.98
							7	9.02	1.94	8.83	1.96	8.66	1.99	8.60	2.00	8.50	2.01	8.36	2.04	8.24	2.05
							10	9.81	2.00	9.61	2.03	9.43	2.06	9.34	2.07	9.26	2.08	9.12	2.10	8.99	2.12
							15	10.79	2.08	10.58	2.11	10.39	2.14	10.30	2.15	10.22	2.17	10.06	2.19	9.92	2.21
2500	2500	2500	2500		10000	143%	-15	4.92	1.59	4.77	1.61	4.63	1.63	4.57	1.64	4.51	1.65	4.41	1.67	4.33	1.68
							-10	5.90	1.67	5.73	1.70	5.59	1.72	5.52	1.73	5.46	1.74	5.35	1.76	5.25	1.77
							-5	6.87	1.76	6.70	1.78	6.55	1.81	6.47	1.82	6.41	1.83	6.29	1.85	6.18	1.86
							0	7.85	1.84	7.67	1.87	7.50	1.89	7.43	1.90	7.36	1.91	7.23	1.93	7.12	1.95
							2	8.24	1.87	8.06	1.90	7.89	1.92	7.81	1.94	7.74	1.95	7.61	1.97	7.49	1.98
							7	9.02	1.94	8.83	1.96	8.66	1.99	8.60	2.00	8.50	2.01	8.36	2.04	8.24	2.05
							10	9.81	2.00	9.61	2.03	9.43	2.06	9.34	2.07	9.26	2.08	9.12	2.10	8.99	2.12
							15	10.79	2.08	10.58	2.11	10.39	2.14	10.30	2.15	10.22	2.17	10.06	2.19	9.92	2.21

* All figures comply with EN14511

1. Cooling capacity is based on 27°CDB / 19°CWB (indoor temperature), 35°CDB (outdoor temperature).
2. Heating capacity is based on 20°CDB (indoor temperature), 7°CDB/6°CWB (outdoor temperature).
3. Capacities are based on the following conditions : - Corresponding refrigerant piping length : 5m / - Level difference : 0m
4. The total ability of connected a indoor unit is up to 10.5kW
5. It is impossible to connect the indoor unit for one room only.
6. This data is reference data for temperature capacity trend.

6 AJ080FCJ4EH

1) Cooling

	Combination (Capacity Index)	Combination (Total)	Combination (%)	Outdoor Temperature (°C, DB)	Indoor Temperature(°C, WB)													
					14		16		18		19		20		22		24	
					TC(kW)	PI(kW)	TC(kW)	PI(kW)	TC(kW)	PI(kW)	TC(kW)	PI(kW)	TC(kW)	PI(kW)	TC(kW)	PI(kW)	TC(kW)	PI(kW)
COOLING	2000	2000	25%	10	1.76	0.45	2.55	0.50	2.66	0.55	2.71	0.56	2.76	0.58	2.87	0.61	2.98	0.63
				12	1.76	0.47	2.51	0.52	2.62	0.56	2.67	0.58	2.72	0.60	2.83	0.62	2.94	0.64
				14	1.76	0.49	2.47	0.54	2.57	0.58	2.63	0.60	2.68	0.61	2.79	0.64	2.90	0.66
				16	1.76	0.51	2.43	0.56	2.53	0.60	2.59	0.61	2.64	0.63	2.75	0.65	2.85	0.67
				18	1.76	0.54	2.39	0.58	2.49	0.62	2.54	0.63	2.60	0.65	2.70	0.67	2.81	0.68
				20	1.76	0.56	2.35	0.60	2.45	0.63	2.50	0.65	2.56	0.66	2.66	0.68	2.77	0.69
				21	1.76	0.57	2.33	0.61	2.43	0.64	2.48	0.66	2.54	0.67	2.64	0.69	2.75	0.70
				23	1.76	0.59	2.29	0.63	2.39	0.66	2.44	0.68	2.49	0.69	2.60	0.71	2.70	0.72
				25	1.76	0.61	2.25	0.65	2.35	0.68	2.40	0.69	2.45	0.70	2.56	0.72	2.66	0.73
				27	1.76	0.64	2.21	0.67	2.31	0.70	2.36	0.71	2.41	0.72	2.51	0.74	2.62	0.74
				29	1.76	0.66	2.17	0.69	2.27	0.72	2.32	0.73	2.37	0.74	2.47	0.75	2.58	0.76
				31	1.76	0.68	2.13	0.72	2.23	0.74	2.28	0.75	2.33	0.76	2.43	0.77	2.53	0.77
				33	1.76	0.71	2.09	0.74	2.19	0.76	2.24	0.77	2.29	0.78	2.39	0.79	2.49	0.79
				35	1.76	0.73	2.05	0.76	2.15	0.78	2.20	0.78	2.25	0.80	2.35	0.80	2.45	0.80
				37	1.76	0.75	2.01	0.78	2.11	0.80	2.16	0.81	2.21	0.82	2.31	0.82	2.41	0.82
				39	1.76	0.78	1.97	0.81	2.07	0.82	2.12	0.83	2.17	0.84	2.27	0.84	2.37	0.84
				42	1.74	0.82	1.91	0.84	2.01	0.86	2.06	0.86	2.11	0.87	2.21	0.87	2.30	0.86
				44	1.65	0.84	1.88	0.86	1.97	0.88	2.02	0.88	2.07	0.89	2.17	0.89	2.26	0.88
				46	1.61	0.87	1.84	0.89	1.93	0.90	1.98	0.91	2.03	0.91	2.12	0.91	2.22	0.90
	2500	2500	31%	10	2.00	0.49	2.90	0.54	3.02	0.59	3.08	0.61	3.14	0.63	3.26	0.66	3.39	0.68
				12	2.00	0.51	2.85	0.56	2.97	0.61	3.03	0.63	3.09	0.64	3.22	0.67	3.34	0.69
				14	2.00	0.53	2.80	0.58	2.93	0.62	2.99	0.64	3.05	0.66	3.17	0.69	3.29	0.71
				16	2.00	0.55	2.76	0.60	2.88	0.64	2.94	0.66	3.00	0.68	3.12	0.70	3.24	0.72
				18	2.00	0.58	2.71	0.62	2.83	0.66	2.89	0.68	2.95	0.69	3.07	0.72	3.19	0.73
				20	2.00	0.60	2.67	0.65	2.79	0.68	2.85	0.70	2.90	0.71	3.02	0.73	3.14	0.75
				21	2.00	0.61	2.64	0.66	2.76	0.69	2.82	0.71	2.88	0.72	3.00	0.74	3.12	0.76
				23	2.00	0.64	2.60	0.68	2.72	0.71	2.78	0.73	2.83	0.74	2.95	0.76	3.07	0.77
				25	2.00	0.66	2.55	0.70	2.67	0.73	2.73	0.75	2.79	0.76	2.91	0.78	3.02	0.79
				27	2.00	0.68	2.51	0.72	2.62	0.75	2.68	0.77	2.74	0.78	2.86	0.79	2.98	0.80
				29	2.00	0.71	2.46	0.75	2.58	0.78	2.64	0.79	2.69	0.80	2.81	0.81	2.93	0.82
				31	2.00	0.73	2.42	0.77	2.53	0.80	2.59	0.81	2.65	0.82	2.76	0.83	2.88	0.83
				33	2.00	0.76	2.37	0.79	2.49	0.82	2.54	0.83	2.60	0.84	2.72	0.85	2.83	0.85
				35	2.00	0.79	2.33	0.82	2.44	0.84	2.50	0.84	2.56	0.86	2.67	0.87	2.78	0.87
				37	2.00	0.81	2.29	0.84	2.40	0.86	2.45	0.87	2.51	0.88	2.62	0.89	2.74	0.88
				39	2.00	0.84	2.24	0.87	2.35	0.89	2.41	0.90	2.46	0.90	2.58	0.91	2.69	0.90
				42	1.98	0.88	2.18	0.91	2.29	0.92	2.34	0.93	2.40	0.93	2.51	0.93	2.62	0.93
				44	1.88	0.91	2.13	0.93	2.24	0.95	2.30	0.95	2.35	0.96	2.46	0.96	2.57	0.95
				46	1.83	0.94	2.09	0.96	2.20	0.97	2.25	0.98	2.30	0.98	2.41	0.98	2.53	0.97
	3500	3500	44%	10	2.80	0.65	4.06	0.73	4.23	0.79	4.31	0.82	4.40	0.84	4.57	0.88	4.74	0.92
				12	2.80	0.68	3.99	0.75	4.16	0.82	4.25	0.84	4.33	0.87	4.50	0.90	4.68	0.93
				14	2.80	0.71	3.93	0.78	4.10	0.84	4.18	0.87	4.26	0.89	4.44	0.92	4.61	0.95
				16	2.80	0.74	3.86	0.81	4.03	0.87	4.11	0.89	4.20	0.91	4.37	0.95	4.54	0.97
				18	2.80	0.78	3.80	0.84	3.96	0.89	4.05	0.91	4.13	0.93	4.30	0.97	4.47	0.99
				20	2.80	0.81	3.73	0.87	3.90	0.92	3.98	0.94	4.07	0.96	4.23	0.99	4.40	1.01
				21	2.80	0.82	3.70	0.88	3.87	0.93	3.95	0.95	4.03	0.97	4.20	1.00	4.37	1.02
				23	2.80	0.85	3.64	0.91	3.80	0.96	3.89	0.98	3.97	1.00	4.13	1.02	4.30	1.04
				25	2.80	0.89	3.58	0.94	3.74	0.99	3.82	1.01	3.90	1.02	4.07	1.04	4.23	1.06
				27	2.80	0.92	3.51	0.97	3.67	1.02	3.76	1.03	3.84	1.05	4.00	1.07	4.17	1.08
				29	2.80	0.95	3.45	1.00	3.61	1.04	3.69	1.06	3.77	1.07	3.93	1.09	4.10	1.10
				31	2.80	0.99	3.39	1.04	3.55	1.07	3.63	1.09	3.71	1.10	3.87	1.12	4.03	1.12
				33	2.80	1.02	3.32	1.07	3.48	1.10	3.56	1.12	3.64	1.13	3.80	1.14	3.97	1.14
				35	2.80	1.06	3.26	1.10	3.42	1.13	3.50	1.13	3.58	1.15	3.74	1.17	3.90	1.17
				37	2.80	1.09	3.20	1.13	3.36	1.16	3.43	1.17	3.51	1.18	3.67	1.19	3.83	1.19
				39	2.80	1.13	3.14	1.17	3.29	1.19	3.37	1.20	3.45	1.21	3.61	1.22	3.77	1.21
				42	2.77	1.18	3.05	1.22	3.20	1.24	3.28	1.25	3.35	1.26	3.51	1.26	3.67	1.25
				44	2.63	1.22	2.98	1.25	3.14	1.27	3.21	1.28	3.29	1.28	3.45	1.28	3.60	1.27
				46	2.56	1.26	2.92	1.29	3.07	1.31	3.15	1.31	3.23	1.32	3.38	1.31	3.54	1.30
	5000	5000	63%	10	3.92	0.88	5.68	0.98	5.92	1.06	6.04	1.10	6.16	1.13	6.40	1.19	6.64	1.23
				12	3.92	0.92	5.59	1.02	5.82	1.10	5.94	1.13	6.06	1.16	6.30	1.22	6.55	1.25
				14	3.92	0.96	5.50	1.05	5.73	1.13	5.85	1.16	5.97	1.19	6.21	1.24	6.45	1.28
				16	3.92	1.00	5.41	1.09	5.64	1.17	5.76	1.20	5.88	1.23	6.12	1.27	6.35	1.30
				18	3.92	1.04	5.32	1.13	5.55	1.20	5.67	1.23	5.79	1.26	6.02	1.30	6.26	1.33
				20	3.92	1.08	5.23	1.17	5.46	1.24	5.58	1.26	5.69	1.29	5.93	1.33	6.16	1.35
				21	3.92	1.11	5.18	1.19	5.41	1.25	5.53	1.28	5.65	1.31	5.88	1.34	6.12	1.37
				23	3.92	1.15	5.10	1.23	5.32	1.29	5.44	1.32	5.56	1.34	5.79	1.37	6.02	1.39
				25	3.92	1.19	5.01	1.27	5.23	1.33	5.35	1.35	5.46	1.37	5.69	1.40	5.93	1.42
				27	3.92	1.24	4.92	1.31	5.14	1.37	5.26	1.39	5.37	1.41	5.60	1.44	5.83	1.45
				29	3.92	1.28	4.83	1.35	5.05	1.40	5.17	1.43	5.28	1.44	5.51	1.47	5.74	1.48
				31	3.92	1.33	4.74	1.39	4.97	1.44	5.08	1.46	5.19	1.48	5.42	1.50	5.64	1.51
				33	3.92	1.38	4.65	1.44	4.88	1.48	4.99	1.50	5.10	1.52	5.32	1.53	5.55	1.54
				35	3.92	1.42	4.57	1.48	4.79	1.52	4.90	1.52	5.01	1.55	5.23	1.57	5.46	1.57
				37	3.92	1.47	4.48	1.52	4.70	1.57	4.81	1.58	4.92	1.59	5.14	1.60	5.36	1.60
				39	3.92	1.52	4.39	1.57	4.61	1.61	4.72	1.62	4.83	1.63	5.05	1.64	5.27	1.63
				42	3.87	1.59	4.26	1.64	4.48	1.67	4.59	1.68	4.70	1.69	4.91	1.69	5.13	1.68
				44	3.68	1.64	4.18	1.69	4.39	1.71	4.50	1.72	4.61	1.73	4.82	1.73	5.04	1.71
				46	3.58	1.69	4.09	1.73	4.30	1.76	4.41	1.77	4.52	1.77	4.73	1.77	4.95	1.75

* All figures comply with EN14511

1. Cooling capacity is based on 27°CDB / 19°CWB (indoor temperature), 35°CDB (outdoor temperature).
2. Heating capacity is based on 20°CDB (indoor temperature), 7°CDB/6°CWB (outdoor temperature).
3. Capacities are based on the following conditions : - Corresponding refrigerant piping length : 5m / - Level difference : 0m
4. The total ability of connected a indoor unit is up to 6.0kW
5. It is impossible to connect the indoor unit for one room only.
6. This data is reference data for temperature capacity trend.

6 AJ080FCJ4EH

1) Cooling

COOLING

Combination (Capacity Index)					Combination (Total)	Combination (%)	Outdoor Temperature (°C, DB)	Indoor Temperature(°C, WB)													
								14		16		18		19		20		22		24	
								TC(kW)	PI(kW)	TC(kW)	PI(kW)	TC(kW)	PI(kW)	TC(kW)	PI(kW)	TC(kW)	PI(kW)	TC(kW)	PI(kW)	TC(kW)	PI(kW)
6800					6800	85%	10	4.80	0.88	6.95	1.28	7.25	1.39	7.39	1.44	7.54	1.48	7.84	1.56	8.13	1.61
							12	4.80	0.92	6.84	1.33	7.13	1.44	7.28	1.48	7.43	1.52	7.72	1.59	8.02	1.64
							14	4.80	0.96	6.73	1.38	7.02	1.48	7.17	1.52	7.31	1.56	7.60	1.63	7.90	1.67
							16	4.80	1.00	6.62	1.43	6.91	1.53	7.05	1.57	7.20	1.60	7.49	1.66	7.78	1.71
							18	4.80	1.04	6.51	1.48	6.80	1.57	6.94	1.61	7.08	1.65	7.37	1.70	7.66	1.74
							20	4.80	1.08	6.40	1.53	6.69	1.62	6.83	1.66	6.97	1.69	7.26	1.74	7.55	1.77
							21	4.80	1.11	6.35	1.55	6.63	1.64	6.77	1.68	6.91	1.71	7.20	1.76	7.49	1.79
							23	4.80	1.15	6.24	1.61	6.52	1.69	6.66	1.72	6.80	1.75	7.09	1.80	7.37	1.83
							25	4.80	1.19	6.13	1.66	6.41	1.74	6.55	1.77	6.69	1.80	6.97	1.84	7.26	1.86
							27	4.80	1.24	6.02	1.71	6.30	1.79	6.44	1.82	6.58	1.84	6.86	1.88	7.14	1.90
							29	4.80	1.28	5.91	1.77	6.19	1.84	6.33	1.87	6.47	1.89	6.75	1.92	7.03	1.94
							31	4.80	1.33	5.81	1.82	6.08	1.89	6.22	1.92	6.36	1.94	6.63	1.97	6.91	1.97
							33	4.80	1.38	5.70	1.88	5.97	1.94	6.11	1.97	6.24	1.98	6.52	2.01	6.80	2.01
							35	4.80	1.42	5.59	1.94	5.86	2.00	6.00	1.99	6.13	2.03	6.41	2.05	6.68	2.05
							37	4.80	1.47	5.49	2.00	5.75	2.05	5.89	2.07	6.02	2.08	6.30	2.10	6.57	2.09
							39	4.80	1.52	5.38	2.06	5.65	2.10	5.78	2.12	5.91	2.13	6.18	2.14	6.46	2.14
							42	4.74	1.59	5.22	2.15	5.48	2.19	5.62	2.20	5.75	2.21	6.02	2.21	6.29	2.20
							44	4.50	1.64	5.12	2.21	5.38	2.24	5.51	2.26	5.64	2.26	5.91	2.26	6.17	2.24
							46	4.38	1.69	5.01	2.27	5.27	2.30	5.40	2.31	5.53	2.32	5.80	2.31	6.06	2.29
2000	2000				4000	50%	10	3.53	0.87	4.99	0.89	5.08	0.91	5.14	0.92	5.20	0.94	5.35	0.95	5.52	0.97
							12	3.53	0.89	4.85	0.91	4.95	0.94	5.01	0.95	5.08	0.96	5.23	0.98	5.41	1.00
							14	3.53	0.92	4.72	0.94	4.83	0.96	4.89	0.97	4.96	0.98	5.12	1.00	5.31	1.02
							16	3.53	0.94	4.60	0.96	4.71	0.98	4.78	0.99	4.85	1.00	5.02	1.02	5.21	1.04
							18	3.53	0.96	4.48	0.98	4.60	1.01	4.67	1.02	4.75	1.03	4.92	1.04	5.12	1.06
							20	3.53	0.99	4.36	1.01	4.49	1.03	4.57	1.04	4.65	1.05	4.83	1.07	5.03	1.09
							21	3.53	1.00	4.31	1.02	4.44	1.04	4.52	1.05	4.60	1.06	4.78	1.08	4.99	1.10
							23	3.53	1.03	4.20	1.05	4.34	1.07	4.42	1.08	4.51	1.09	4.70	1.11	4.91	1.13
							25	3.53	1.05	4.10	1.07	4.25	1.09	4.33	1.10	4.42	1.11	4.62	1.13	4.84	1.15
							27	3.53	1.08	4.01	1.10	4.16	1.12	4.25	1.13	4.34	1.14	4.55	1.16	4.78	1.18
							29	3.53	1.11	3.92	1.13	4.08	1.15	4.17	1.16	4.27	1.17	4.48	1.19	4.72	1.20
							31	3.53	1.13	3.84	1.15	4.01	1.18	4.10	1.19	4.20	1.19	4.42	1.21	4.66	1.23
							33	3.53	1.16	3.76	1.18	3.94	1.20	4.03	1.21	4.13	1.22	4.36	1.24	4.61	1.26
							35	3.53	1.19	3.69	1.21	3.87	1.23	4.00	1.24	4.08	1.25	4.31	1.27	4.57	1.29
							37	3.53	1.22	3.62	1.24	3.81	1.26	3.91	1.27	4.02	1.28	4.26	1.30	4.53	1.32
							39	3.53	1.25	3.56	1.27	3.76	1.29	3.86	1.30	3.98	1.31	4.22	1.33	4.49	1.35
							42	3.53	1.30	3.48	1.32	3.69	1.34	3.80	1.35	3.92	1.36	4.17	1.38	4.46	1.40
							44	3.53	1.33	3.44	1.35	3.65	1.37	3.76	1.38	3.89	1.39	4.15	1.41	4.44	1.43
							46	3.53	1.37	3.39	1.39	3.61	1.41	3.73	1.42	3.86	1.43	4.13	1.44	4.42	1.46
2000	2500				4500	56%	10	4.07	1.00	5.73	1.03	5.84	1.05	5.91	1.07	5.98	1.08	6.15	1.10	6.34	1.12
							12	4.07	1.03	5.58	1.06	5.69	1.08	5.76	1.09	5.84	1.10	6.02	1.13	6.22	1.15
							14	4.07	1.06	5.43	1.08	5.55	1.11	5.63	1.12	5.71	1.13	5.89	1.15	6.10	1.17
							16	4.07	1.08	5.29	1.11	5.42	1.13	5.50	1.14	5.58	1.16	5.77	1.18	5.99	1.20
							18	4.07	1.11	5.15	1.14	5.29	1.16	5.37	1.17	5.46	1.18	5.66	1.21	5.89	1.23
							20	4.07	1.14	5.02	1.16	5.17	1.19	5.25	1.20	5.34	1.21	5.55	1.23	5.79	1.25
							21	4.07	1.15	4.96	1.18	5.11	1.20	5.19	1.21	5.29	1.22	5.50	1.25	5.74	1.27
							23	4.07	1.18	4.83	1.21	4.99	1.23	5.09	1.24	5.18	1.25	5.40	1.28	5.65	1.30
							25	4.07	1.21	4.72	1.24	4.89	1.26	4.98	1.27	5.09	1.28	5.31	1.31	5.57	1.33
							27	4.07	1.24	4.61	1.27	4.79	1.29	4.89	1.30	4.99	1.31	5.23	1.34	5.49	1.36
							29	4.07	1.27	4.51	1.30	4.69	1.32	4.80	1.33	4.91	1.35	5.15	1.37	5.42	1.39
							31	4.07	1.31	4.42	1.33	4.61	1.36	4.71	1.37	4.83	1.38	5.08	1.40	5.36	1.42
							33	4.07	1.34	4.33	1.36	4.53	1.39	4.64	1.40	4.76	1.41	5.01	1.43	5.30	1.45
							35	4.07	1.37	4.24	1.40	4.45	1.42	4.60	1.43	4.69	1.44	4.96	1.47	5.25	1.49
							37	4.07	1.41	4.17	1.43	4.38	1.46	4.50	1.47	4.63	1.48	4.90	1.50	5.21	1.52
							39	4.07	1.44	4.10	1.47	4.32	1.49	4.44	1.50	4.57	1.51	4.86	1.54	5.17	1.56
							42	4.07	1.50	4.01	1.52	4.24	1.55	4.37	1.56	4.51	1.57	4.80	1.59	5.12	1.61
							44	4.07	1.54	3.95	1.56	4.20	1.58	4.33	1.59	4.47	1.61	4.77	1.63	5.10	1.65
							46	4.07	1.57	3.90	1.60	4.16	1.62	4.29	1.63	4.44	1.64	4.75	1.66	5.09	1.68
2000	3500				5500	69%	10	4.86	1.20	6.86	1.23	6.99	1.26	7.06	1.28	7.15	1.29	7.35	1.32	7.59	1.34
							12	4.86	1.23	6.67	1.26	6.81	1.29	6.89	1.31	6.98	1.32	7.19	1.35	7.44	1.37
							14	4.86	1.26	6.49	1.29	6.64	1.32	6.73	1.34	6.82	1.35	7.04	1.38	7.30	1.40
							16	4.86	1.29	6.32	1.32	6.48	1.35	6.57	1.37	6.67	1.38	6.90	1.41	7.16	1.43
							18	4.86	1.33	6.16	1.36	6.32	1.39	6.42	1.40	6.53	1.41	6.76	1.44	7.04	1.47
							20	4.86	1.36	6.00	1.39	6.18	1.42	6.28	1.43	6.39	1.45	6.64	1.47	6.92	1.50
							21	4.86	1.38	5.92	1.41	6.11	1.44	6.21	1.45	6.32	1.46	6.58	1.49	6.86	1.52
							23	4.86	1.41	5.78	1.44	5.97	1.47	6.08	1.49	6.20	1.50	6.46	1.53	6.76	1.55
							25	4.86	1.45	5.64	1.48	5.84	1.51	5.96	1.52	6.08	1.54	6.35	1.56	6.66	1.59
							27	4.86	1.49	5.51	1.52	5.72	1.54	5.84	1.56	5.97	1.57	6.25	1.60	6.57	1.62
							29	4.86	1.52	5.39	1.55	5.61	1.58	5.74	1.60	5.87	1.61	6.16	1.64	6.48	1.66
							31	4.86	1.56	5.28	1.59	5.51	1.62	5.64	1.63	5.77	1.65	6.07	1.67	6.41	1.70
							33	4.86	1.60	5.17	1.63	5.41	1.66	5.54	1.67	5.69	1.69	5.99	1.71	6.34	1.74
							35	4.86	1.64	5.07	1.67	5.32	1.70	5.50	1.71	5.61	1.73	5.92	1.75	6.28	1.78
							37	4.86	1.69	4.98	1.71	5.24	1.74	5.38	1.76	5.53	1.77	5.86	1.79	6.23	1.82
							39	4.86	1.73	4.90	1.76	5.17	1.78	5.31	1.80	5.47	1.81	5.81	1.84	6.18	1.86
							42	4.86	1.79	4.79	1.82	5.07	1.85	5.22	1.86	5.39	1.88	5.74	1.90	6.13	1.93
							44	4.86	1.84	4.72	1.87	5.02	1.89	5.17	1.91	5.34	1.92	5.70	1.95	6.10	1.97
							46	4.86	1.88	4.67	1.91	4.97	1.94	5.13	1.95	5.30	1.97	5.68	1.99	6.08	2.01

* All figures comply with EN14511

1. Cooling capacity is based on 27°CDB / 19°CWB (indoor temperature), 35°CDB (outdoor temperature).
2. Heating capacity is based on 20°CDB (indoor temperature), 7°CDB/6°CWB (outdoor temperature).
3. Capacities are based on the following conditions : - Corresponding refrigerant piping length : 5m / - Level difference : 0m
4. The total ability of connected a indoor unit is up to 12kW
5. It is impossible to connect the indoor unit for one room only.
6. This data is reference data for temperature capacity trend.

1) Cooling

COOLING

Combination (Capacity Index)					Combination (Total)	Combination (%)	Outdoor Temperature (°C, DB)	Indoor Temperature(°C, WB)													
								14		16		18		19		20		22		24	
								TC(kW)	PI(kW)	TC(kW)	PI(kW)	TC(kW)	PI(kW)	TC(kW)	PI(kW)	TC(kW)	PI(kW)	TC(kW)	PI(kW)	TC(kW)	PI(kW)
2000	5000				7000	88%	10	6.36	1.57	8.98	1.61	9.15	1.65	9.25	1.67	9.36	1.69	9.62	1.72	9.93	1.76
							12	6.36	1.61	8.73	1.65	8.91	1.69	9.02	1.71	9.14	1.73	9.42	1.76	9.74	1.80
							14	6.36	1.65	8.50	1.69	8.69	1.73	8.81	1.75	8.93	1.77	9.22	1.80	9.55	1.84
							16	6.36	1.70	8.27	1.74	8.48	1.77	8.60	1.79	8.73	1.81	9.03	1.85	9.38	1.88
							18	6.36	1.74	8.06	1.78	8.28	1.82	8.41	1.83	8.54	1.85	8.86	1.89	9.21	1.92
							20	6.36	1.78	7.85	1.82	8.09	1.86	8.22	1.88	8.36	1.90	8.69	1.93	9.06	1.97
							21	6.36	1.81	7.76	1.84	7.99	1.88	8.13	1.90	8.28	1.92	8.61	1.95	8.98	1.99
							23	6.36	1.85	7.57	1.89	7.82	1.93	7.96	1.95	8.11	1.96	8.46	2.00	8.85	2.03
							25	6.36	1.90	7.39	1.94	7.65	1.98	7.80	1.99	7.96	2.01	8.32	2.05	8.72	2.08
							27	6.36	1.95	7.22	1.99	7.49	2.02	7.65	2.04	7.82	2.06	8.18	2.09	8.60	2.13
							29	6.36	2.00	7.06	2.04	7.35	2.07	7.51	2.09	7.68	2.11	8.06	2.14	8.49	2.18
							31	6.36	2.05	6.91	2.09	7.21	2.12	7.38	2.14	7.56	2.16	7.95	2.19	8.39	2.23
							33	6.36	2.10	6.77	2.14	7.08	2.17	7.26	2.19	7.44	2.21	7.85	2.24	8.30	2.28
							35	6.36	2.15	6.64	2.19	6.97	2.23	7.20	2.24	7.34	2.26	7.76	2.30	8.22	2.33
							37	6.36	2.21	6.52	2.25	6.86	2.28	7.05	2.30	7.24	2.32	7.67	2.35	8.15	2.38
							39	6.36	2.26	6.41	2.30	6.76	2.34	6.96	2.35	7.16	2.37	7.60	2.41	8.09	2.44
							42	6.36	2.35	6.27	2.39	6.64	2.42	6.84	2.44	7.05	2.46	7.51	2.49	8.02	2.52
							44	6.36	2.41	6.18	2.44	6.57	2.48	6.77	2.50	6.99	2.52	7.47	2.55	7.99	2.58
							46	6.36	2.47	6.11	2.50	6.50	2.54	6.72	2.56	6.94	2.57	7.43	2.61	7.96	2.64
2000	6800				8800	110%	10	6.36	1.57	9.29	1.69	9.46	1.73	9.57	1.75	9.69	1.77	9.96	1.81	10.28	1.85
							12	6.36	1.61	9.03	1.73	9.22	1.77	9.34	1.79	9.46	1.81	9.74	1.85	10.07	1.89
							14	6.36	1.65	8.79	1.78	8.99	1.82	9.11	1.84	9.24	1.86	9.54	1.89	9.88	1.93
							16	6.36	1.70	8.56	1.82	8.77	1.86	8.90	1.88	9.04	1.90	9.35	1.94	9.70	1.97
							18	6.36	1.74	8.34	1.87	8.57	1.91	8.70	1.92	8.84	1.94	9.16	1.98	9.53	2.02
							20	6.36	1.78	8.13	1.91	8.37	1.95	8.51	1.97	8.66	1.99	8.99	2.03	9.37	2.06
							21	6.36	1.81	8.03	1.94	8.27	1.97	8.41	1.99	8.57	2.01	8.91	2.05	9.30	2.08
							23	6.36	1.85	7.83	1.98	8.09	2.02	8.24	2.04	8.40	2.06	8.75	2.10	9.15	2.13
							25	6.36	1.90	7.64	2.03	7.92	2.07	8.07	2.09	8.24	2.11	8.60	2.15	9.02	2.18
							27	6.36	1.95	7.47	2.08	7.75	2.12	7.91	2.14	8.09	2.16	8.47	2.20	8.90	2.23
							29	6.36	2.00	7.30	2.14	7.60	2.17	7.77	2.19	7.95	2.21	8.34	2.25	8.78	2.28
							31	6.36	2.05	7.15	2.19	7.46	2.23	7.63	2.25	7.82	2.26	8.23	2.30	8.68	2.34
							33	6.36	2.10	7.01	2.24	7.33	2.28	7.51	2.30	7.70	2.32	8.12	2.35	8.59	2.39
							35	6.36	2.15	6.87	2.30	7.21	2.34	7.45	2.35	7.59	2.37	8.02	2.41	8.50	2.44
							37	6.36	2.21	6.75	2.36	7.10	2.39	7.29	2.41	7.50	2.43	7.94	2.47	8.43	2.50
							39	6.36	2.26	6.64	2.41	7.00	2.45	7.20	2.47	7.41	2.49	7.87	2.52	8.37	2.56
							42	6.36	2.35	6.49	2.50	6.87	2.54	7.08	2.56	7.30	2.58	7.77	2.61	8.30	2.65
							44	6.36	2.41	6.40	2.56	6.79	2.60	7.01	2.62	7.24	2.64	7.73	2.67	8.26	2.71
							46	6.36	2.47	6.32	2.63	6.73	2.66	6.95	2.68	7.19	2.70	7.69	2.74	8.24	2.77
2500	2500				5000	63%	10	4.60	1.17	6.48	1.20	6.61	1.22	6.68	1.24	6.76	1.25	6.95	1.28	7.17	1.30
							12	4.60	1.20	6.31	1.22	6.44	1.25	6.52	1.27	6.60	1.28	6.80	1.31	7.03	1.33
							14	4.60	1.23	6.14	1.25	6.28	1.28	6.36	1.30	6.45	1.31	6.66	1.34	6.90	1.36
							16	4.60	1.26	5.97	1.29	6.12	1.31	6.21	1.33	6.31	1.34	6.52	1.37	6.77	1.39
							18	4.60	1.29	5.82	1.32	5.98	1.35	6.07	1.36	6.17	1.37	6.40	1.40	6.65	1.42
							20	4.60	1.32	5.67	1.35	5.84	1.38	5.94	1.39	6.04	1.41	6.28	1.43	6.54	1.46
							21	4.60	1.34	5.60	1.37	5.77	1.39	5.87	1.41	5.98	1.42	6.22	1.45	6.49	1.47
							23	4.60	1.37	5.47	1.40	5.65	1.43	5.75	1.44	5.86	1.46	6.11	1.48	6.39	1.51
							25	4.60	1.41	5.34	1.44	5.53	1.46	5.63	1.48	5.75	1.49	6.01	1.52	6.29	1.54
							27	4.60	1.44	5.21	1.47	5.41	1.50	5.52	1.51	5.64	1.53	5.91	1.55	6.21	1.58
							29	4.60	1.48	5.10	1.51	5.31	1.54	5.42	1.55	5.55	1.56	5.82	1.59	6.13	1.61
							31	4.60	1.52	4.99	1.55	5.21	1.57	5.33	1.59	5.46	1.60	5.74	1.63	6.06	1.65
							33	4.60	1.56	4.89	1.58	5.12	1.61	5.24	1.62	5.38	1.64	5.67	1.66	5.99	1.69
							35	4.60	1.60	4.80	1.62	5.03	1.65	5.20	1.66	5.30	1.68	5.60	1.70	5.94	1.73
							37	4.60	1.64	4.71	1.66	4.95	1.69	5.09	1.70	5.23	1.72	5.54	1.74	5.89	1.77
							39	4.60	1.68	4.63	1.71	4.89	1.73	5.02	1.74	5.17	1.76	5.49	1.78	5.84	1.81
							42	4.60	1.74	4.53	1.77	4.79	1.80	4.94	1.81	5.09	1.82	5.43	1.85	5.79	1.87
							44	4.60	1.78	4.47	1.81	4.74	1.84	4.89	1.85	5.05	1.86	5.39	1.89	5.77	1.91
							46	4.60	1.83	4.41	1.86	4.70	1.88	4.85	1.90	5.02	1.91	5.37	1.93	5.75	1.96
2500	3500				6000	75%	10	5.39	1.33	7.60	1.37	7.75	1.40	7.83	1.42	7.93	1.43	8.15	1.46	8.41	1.49
							12	5.39	1.37	7.40	1.40	7.55	1.43	7.64	1.45	7.75	1.47	7.98	1.50	8.25	1.53
							14	5.39	1.40	7.20	1.44	7.36	1.47	7.46	1.48	7.57	1.50	7.81	1.53	8.09	1.56
							16	5.39	1.44	7.01	1.47	7.18	1.50	7.29	1.52	7.40	1.54	7.65	1.57	7.94	1.59
							18	5.39	1.47	6.83	1.51	7.01	1.54	7.12	1.56	7.24	1.57	7.50	1.60	7.81	1.63
							20	5.39	1.51	6.65	1.55	6.85	1.58	6.96	1.59	7.09	1.61	7.36	1.64	7.67	1.67
							21	5.39	1.53	6.57	1.56	6.77	1.60	6.89	1.61	7.01	1.63	7.29	1.66	7.61	1.69
							23	5.39	1.57	6.41	1.60	6.62	1.64	6.74	1.65	6.87	1.67	7.16	1.70	7.49	1.72
							25	5.39	1.61	6.26	1.64	6.48	1.68	6.61	1.69	6.74	1.71	7.04	1.74	7.38	1.76
							27	5.39	1.65	6.12	1.68	6.35	1.72	6.48	1.73	6.62	1.75	6.93	1.78	7.28	1.80
							29	5.39	1.69	5.98	1.73	6.22	1.76	6.36	1.77	6.51	1.79	6.83	1.82	7.19	1.85
							31	5.39	1.74	5.85	1.77	6.11	1.80	6.25	1.82	6.40	1.83	6.73	1.86	7.11	1.89
							33	5.39	1.78	5.74	1.81	6.00	1.84	6.15	1.86	6.31	1.87	6.65	1.90	7.03	1.93
							35	5.39	1.83	5.63	1.86	5.90	1.89	6.10	1.90	6.22	1.92	6.57	1.95	6.96	1.98
							37	5.39	1.87	5.53	1.90	5.81	1.94	5.97	1.95	6.14	1.97	6.50	1.99	6.90	2.02
							39	5.39	1.92	5.43	1.95	5.73	1.98	5.89	2.00	6.07	2.01	6.44	2.04	6.85	2.07
							42	5.39	1.99	5.31	2.02	5.62	2.05	5.79	2.07	5.97	2.08	6.37	2.11	6.79	2.14
							44	5.39	2.04	5.24	2.07	5.56	2.10	5.74	2.12	5.92	2.13	6.33	2.16	6.77	2.19
							46	5.39	2.09	5.18	2.12	5.51	2.15	5.69	2.17	5.88	2.18	6.29	2.21	6.74	2.24

* All figures comply with EN14511

1. Cooling capacity is based on 27°CDB / 19°CWB (indoor temperature), 35°CDB (outdoor temperature).
2. Heating capacity is based on 20°CDB (indoor temperature), 7°CDB/6°CWB (outdoor temperature).
3. Capacities are based on the following conditions : - Corresponding refrigerant piping length : 5m / - Level difference : 0m
4. The total ability of connected a indoor unit is up to 12kW
5. It is impossible to connect the indoor unit for one room only.
6. This data is reference data for temperature capacity trend.

6 AJ080FCJ4EH

1) Cooling

COOLING

Combination (Capacity Index)					Combination (Total)	Combination (%)	Outdoor Temperature (°C, DB)	Indoor Temperature(°C, WB)													
								14		16		18		19		20		22		24	
								TC(kW)	PI(kW)	TC(kW)	PI(kW)	TC(kW)	PI(kW)	TC(kW)	PI(kW)	TC(kW)	PI(kW)	TC(kW)	PI(kW)	TC(kW)	PI(kW)
2500	5000				7500	94%	10	6.36	1.57	8.98	1.61	9.15	1.65	9.25	1.67	9.36	1.69	9.62	1.72	9.93	1.76
							12	6.36	1.61	8.73	1.65	8.91	1.69	9.02	1.71	9.14	1.73	9.42	1.76	9.74	1.80
							14	6.36	1.65	8.50	1.69	8.69	1.73	8.81	1.75	8.93	1.77	9.22	1.80	9.55	1.84
							16	6.36	1.70	8.27	1.74	8.48	1.77	8.60	1.79	8.73	1.81	9.03	1.85	9.38	1.88
							18	6.36	1.74	8.06	1.78	8.28	1.82	8.41	1.83	8.54	1.85	8.86	1.89	9.21	1.92
							20	6.36	1.78	7.85	1.82	8.09	1.86	8.22	1.88	8.36	1.90	8.69	1.93	9.06	1.97
							21	6.36	1.81	7.76	1.84	7.99	1.88	8.13	1.90	8.28	1.92	8.61	1.95	8.98	1.99
							23	6.36	1.85	7.57	1.89	7.82	1.93	7.96	1.95	8.11	1.96	8.46	2.00	8.85	2.03
							25	6.36	1.90	7.39	1.94	7.65	1.98	7.80	1.99	7.96	2.01	8.32	2.05	8.72	2.08
							27	6.36	1.95	7.22	1.99	7.49	2.02	7.65	2.04	7.82	2.06	8.18	2.09	8.60	2.13
							29	6.36	2.00	7.06	2.04	7.35	2.07	7.51	2.09	7.68	2.11	8.06	2.14	8.49	2.18
							31	6.36	2.05	6.91	2.09	7.21	2.12	7.38	2.14	7.56	2.16	7.95	2.19	8.39	2.23
							33	6.36	2.10	6.77	2.14	7.08	2.17	7.26	2.19	7.44	2.21	7.85	2.24	8.30	2.28
							35	6.36	2.15	6.64	2.19	6.97	2.23	7.20	2.24	7.34	2.26	7.76	2.30	8.22	2.33
							37	6.36	2.21	6.52	2.25	6.86	2.28	7.05	2.30	7.24	2.32	7.67	2.35	8.15	2.38
							39	6.36	2.26	6.41	2.30	6.76	2.34	6.96	2.35	7.16	2.37	7.60	2.41	8.09	2.44
							42	6.36	2.35	6.27	2.39	6.64	2.42	6.84	2.44	7.05	2.46	7.51	2.49	8.02	2.52
							44	6.36	2.41	6.18	2.44	6.57	2.48	6.77	2.50	6.99	2.52	7.47	2.55	7.99	2.58
							46	6.36	2.47	6.11	2.50	6.50	2.54	6.72	2.56	6.94	2.57	7.43	2.61	7.96	2.64
2500	6800				9300	116%	10	6.36	1.57	9.41	1.71	9.59	1.76	9.70	1.78	9.82	1.79	10.09	1.83	10.41	1.87
							12	6.36	1.61	9.16	1.76	9.35	1.80	9.46	1.82	9.59	1.84	9.87	1.87	10.21	1.91
							14	6.36	1.65	8.91	1.80	9.11	1.84	9.23	1.86	9.37	1.88	9.67	1.92	10.02	1.95
							16	6.36	1.70	8.68	1.84	8.89	1.88	9.02	1.90	9.16	1.92	9.47	1.96	9.83	2.00
							18	6.36	1.74	8.45	1.89	8.68	1.93	8.81	1.95	8.96	1.97	9.29	2.01	9.66	2.04
							20	6.36	1.78	8.24	1.94	8.48	1.98	8.62	2.00	8.77	2.01	9.11	2.05	9.50	2.09
							21	6.36	1.81	8.13	1.96	8.38	2.00	8.53	2.02	8.68	2.04	9.03	2.08	9.42	2.11
							23	6.36	1.85	7.93	2.01	8.20	2.05	8.35	2.07	8.51	2.09	8.87	2.12	9.28	2.16
							25	6.36	1.90	7.75	2.06	8.02	2.10	8.18	2.12	8.35	2.14	8.72	2.17	9.14	2.21
							27	6.36	1.95	7.57	2.11	7.86	2.15	8.02	2.17	8.20	2.19	8.58	2.22	9.01	2.26
							29	6.36	2.00	7.40	2.16	7.70	2.20	7.87	2.22	8.05	2.24	8.45	2.28	8.90	2.31
							31	6.36	2.05	7.25	2.22	7.56	2.26	7.74	2.27	7.92	2.29	8.34	2.33	8.80	2.36
							33	6.36	2.10	7.10	2.27	7.43	2.31	7.61	2.33	7.80	2.35	8.23	2.38	8.70	2.42
							35	6.36	2.15	6.97	2.33	7.31	2.37	7.55	2.38	7.70	2.40	8.13	2.44	8.62	2.47
							37	6.36	2.21	6.84	2.39	7.19	2.42	7.39	2.44	7.60	2.46	8.05	2.50	8.55	2.53
							39	6.36	2.26	6.73	2.44	7.09	2.48	7.29	2.50	7.51	2.52	7.97	2.56	8.48	2.59
							42	6.36	2.35	6.57	2.54	6.96	2.57	7.17	2.59	7.40	2.61	7.88	2.65	8.41	2.68
							44	6.36	2.41	6.49	2.60	6.89	2.64	7.10	2.65	7.33	2.67	7.83	2.71	8.37	2.74
							46	6.36	2.47	6.41	2.66	6.82	2.70	7.05	2.72	7.28	2.74	7.79	2.77	8.35	2.80
3500	3500				7000	88%	10	6.19	1.75	8.73	1.79	8.89	1.84	8.99	1.86	9.10	1.88	9.36	1.92	9.66	1.96
							12	6.19	1.79	8.49	1.84	8.67	1.88	8.77	1.90	8.89	1.92	9.15	1.96	9.47	2.00
							14	6.19	1.84	8.26	1.88	8.45	1.92	8.56	1.95	8.68	1.97	8.96	2.01	9.29	2.04
							16	6.19	1.89	8.04	1.93	8.24	1.97	8.36	1.99	8.49	2.01	8.78	2.05	9.12	2.09
							18	6.19	1.93	7.83	1.98	8.05	2.02	8.17	2.04	8.31	2.06	8.61	2.10	8.96	2.14
							20	6.19	1.98	7.64	2.03	7.86	2.07	7.99	2.09	8.13	2.11	8.45	2.15	8.81	2.18
							21	6.19	2.01	7.54	2.05	7.77	2.09	7.90	2.11	8.05	2.13	8.37	2.17	8.74	2.21
							23	6.19	2.06	7.36	2.10	7.60	2.14	7.74	2.16	7.89	2.18	8.22	2.22	8.60	2.26
							25	6.19	2.11	7.18	2.15	7.44	2.20	7.58	2.22	7.74	2.24	8.08	2.27	8.47	2.31
							27	6.19	2.16	7.02	2.21	7.29	2.25	7.44	2.27	7.60	2.29	7.96	2.33	8.36	2.36
							29	6.19	2.22	6.86	2.26	7.14	2.30	7.30	2.32	7.47	2.34	7.84	2.38	8.25	2.42
							31	6.19	2.28	6.72	2.32	7.01	2.36	7.17	2.38	7.35	2.40	7.73	2.44	8.15	2.47
							33	6.19	2.33	6.58	2.38	6.89	2.42	7.06	2.44	7.24	2.46	7.63	2.49	8.07	2.53
							35	6.19	2.39	6.46	2.44	6.77	2.48	7.00	2.49	7.13	2.52	7.54	2.55	7.99	2.59
							37	6.19	2.45	6.34	2.50	6.67	2.54	6.85	2.56	7.04	2.58	7.46	2.61	7.92	2.65
							39	6.19	2.52	6.24	2.56	6.58	2.60	6.76	2.62	6.96	2.64	7.39	2.67	7.87	2.71
							42	6.19	2.61	6.09	2.65	6.45	2.69	6.65	2.71	6.86	2.73	7.30	2.77	7.80	2.80
							44	6.19	2.68	6.01	2.72	6.38	2.76	6.59	2.78	6.80	2.80	7.26	2.83	7.76	2.87
							46	6.19	2.74	5.94	2.78	6.32	2.82	6.53	2.84	6.75	2.86	7.22	2.90	7.74	2.93
3500	5000				8500	106%	10	6.50	1.61	9.16	1.65	9.34	1.69	9.44	1.71	9.56	1.73	9.82	1.76	10.14	1.80
							12	6.50	1.65	8.91	1.69	9.10	1.73	9.21	1.75	9.33	1.77	9.61	1.80	9.94	1.84
							14	6.50	1.69	8.67	1.73	8.87	1.77	8.99	1.79	9.12	1.81	9.41	1.84	9.75	1.88
							16	6.50	1.73	8.45	1.77	8.66	1.81	8.78	1.83	8.92	1.85	9.22	1.89	9.57	1.92
							18	6.50	1.78	8.23	1.82	8.45	1.86	8.58	1.88	8.72	1.89	9.04	1.93	9.40	1.96
							20	6.50	1.82	8.02	1.86	8.26	1.90	8.39	1.92	8.54	1.94	8.87	1.97	9.25	2.01
							21	6.50	1.85	7.92	1.89	8.16	1.92	8.30	1.94	8.45	1.96	8.79	2.00	9.17	2.03
							23	6.50	1.89	7.72	1.93	7.98	1.97	8.13	1.99	8.28	2.01	8.63	2.04	9.03	2.08
							25	6.50	1.94	7.54	1.98	7.81	2.02	7.96	2.04	8.13	2.06	8.49	2.09	8.90	2.13
							27	6.50	1.99	7.37	2.03	7.65	2.07	7.81	2.09	7.98	2.11	8.35	2.14	8.78	2.17
							29	6.50	2.04	7.21	2.08	7.50	2.12	7.67	2.14	7.84	2.16	8.23	2.19	8.66	2.22
							31	6.50	2.09	7.05	2.13	7.36	2.17	7.53	2.19	7.71	2.21	8.12	2.24	8.56	2.28
							33	6.50	2.15	6.91	2.19	7.23	2.22	7.41	2.24	7.60	2.26	8.01	2.29	8.47	2.33
							35	6.50	2.20	6.78	2.24	7.11	2.28	7.35	2.29	7.49	2.31	7.92	2.35	8.39	2.38
							37	6.50	2.26	6.66	2.30	7.00	2.33	7.19	2.35	7.40	2.37	7.83	2.40	8.32	2.44
							39	6.50	2.31	6.55	2.35	6.90	2.39	7.10	2.41	7.31	2.42	7.76	2.46	8.26	2.49
							42	6.50	2.40	6.40	2.44	6.78	2.48	6.98	2.49	7.20	2.51	7.67	2.55	8.19	2.58
							44	6.50	2.46	6.31	2.50	6.70	2.54	6.92	2.55	7.14	2.57	7.62	2.61	8.15	2.64
							46	6.50	2.52	6.24	2.56	6.64	2.60	6.86	2.61	7.09	2.63	7.58	2.67	8.13	2.70

* All figures comply with EN14511

1. Cooling capacity is based on 27°CDB / 19°CWB (indoor temperature), 35°CDB (outdoor temperature).
2. Heating capacity is based on 20°CDB (indoor temperature), 7°CDB/6°CWB (outdoor temperature).
3. Capacities are based on the following conditions : - Corresponding refrigerant piping length : 5m / - Level difference : 0m
4. The total ability of connected a indoor unit is up to 12kW
5. It is impossible to connect the indoor unit for one room only.
6. This data is reference data for temperature capacity trend.

1) Cooling

COOLING

Combination (Capacity Index)					Combination (Total)	Combination (%)	Outdoor Temperature (°C, DB)	Indoor Temperature(°C, WB)													
								14		16		18		19		20		22		24	
								TC(kW)	PI(kW)	TC(kW)	PI(kW)	TC(kW)	PI(kW)	TC(kW)	PI(kW)	TC(kW)	PI(kW)	TC(kW)	PI(kW)	TC(kW)	PI(kW)
3500	6800				10300	129%	10	6.50	1.61	9.60	1.73	9.78	1.77	9.89	1.79	10.01	1.81	10.29	1.85	10.62	1.89
							12	6.50	1.65	9.34	1.77	9.53	1.81	9.65	1.83	9.78	1.85	10.07	1.89	10.41	1.93
							14	6.50	1.69	9.09	1.81	9.30	1.86	9.42	1.88	9.55	1.89	9.86	1.93	10.22	1.97
							16	6.50	1.73	8.85	1.86	9.07	1.90	9.20	1.92	9.34	1.94	9.66	1.98	10.03	2.01
							18	6.50	1.78	8.62	1.91	8.85	1.95	8.99	1.97	9.14	1.98	9.47	2.02	9.85	2.06
							20	6.50	1.82	8.40	1.95	8.65	1.99	8.79	2.01	8.95	2.03	9.29	2.07	9.69	2.11
							21	6.50	1.85	8.29	1.98	8.55	2.02	8.70	2.04	8.85	2.06	9.21	2.09	9.61	2.13
							23	6.50	1.89	8.09	2.03	8.36	2.07	8.51	2.09	8.68	2.10	9.04	2.14	9.46	2.18
							25	6.50	1.94	7.90	2.08	8.18	2.12	8.34	2.14	8.51	2.15	8.89	2.19	9.32	2.23
							27	6.50	1.99	7.72	2.13	8.01	2.17	8.18	2.19	8.36	2.21	8.75	2.24	9.19	2.28
							29	6.50	2.04	7.55	2.18	7.86	2.22	8.03	2.24	8.21	2.26	8.62	2.30	9.08	2.33
							31	6.50	2.09	7.39	2.24	7.71	2.27	7.89	2.29	8.08	2.31	8.50	2.35	8.97	2.38
							33	6.50	2.15	7.24	2.29	7.58	2.33	7.76	2.35	7.96	2.37	8.39	2.40	8.87	2.44
							35	6.50	2.20	7.10	2.35	7.45	2.39	7.70	2.40	7.85	2.42	8.29	2.46	8.79	2.50
							37	6.50	2.26	6.98	2.41	7.34	2.44	7.54	2.46	7.75	2.48	8.21	2.52	8.72	2.55
							39	6.50	2.31	6.86	2.47	7.23	2.50	7.44	2.52	7.66	2.54	8.13	2.58	8.65	2.61
							42	6.50	2.40	6.70	2.56	7.10	2.60	7.31	2.61	7.54	2.63	8.03	2.67	8.58	2.70
							44	6.50	2.46	6.61	2.62	7.02	2.66	7.24	2.68	7.48	2.69	7.98	2.73	8.54	2.76
							46	6.50	2.52	6.54	2.68	6.96	2.72	7.18	2.74	7.43	2.76	7.95	2.79	8.51	2.83
5000	5000				10000	125%	10	8.61	1.67	8.95	1.71	9.29	1.74	9.47	1.76	9.64	1.78	10.00	1.81	10.36	1.85
							12	8.46	1.71	8.80	1.75	9.15	1.79	9.32	1.80	9.50	1.82	9.85	1.86	10.21	1.89
							14	8.31	1.76	8.65	1.80	9.00	1.83	9.17	1.85	9.35	1.87	9.70	1.90	10.06	1.94
							16	8.17	1.81	8.51	1.84	8.85	1.88	9.03	1.90	9.20	1.92	9.56	1.95	9.92	1.99
							18	8.02	1.85	8.36	1.89	8.70	1.93	8.88	1.95	9.05	1.96	9.41	2.00	9.77	2.04
							20	7.87	1.90	8.21	1.94	8.56	1.98	8.73	1.99	8.91	2.01	9.27	2.05	9.63	2.09
							21	7.80	1.93	8.14	1.96	8.48	2.00	8.66	2.02	8.84	2.04	9.19	2.07	9.56	2.11
							23	7.65	1.98	7.99	2.01	8.34	2.05	8.51	2.07	8.69	2.09	9.05	2.12	9.41	2.16
							25	7.50	2.03	7.84	2.06	8.19	2.10	8.37	2.12	8.55	2.14	8.90	2.18	9.27	2.21
							27	7.35	2.08	7.70	2.11	8.05	2.15	8.22	2.17	8.40	2.19	8.76	2.23	9.12	2.26
							29	7.21	2.13	7.55	2.17	7.90	2.20	8.08	2.22	8.26	2.24	8.62	2.28	8.98	2.32
							31	7.06	2.18	7.41	2.22	7.76	2.26	7.93	2.28	8.11	2.30	8.47	2.33	8.84	2.37
							33	6.92	2.23	7.26	2.27	7.61	2.31	7.79	2.33	7.97	2.35	8.33	2.39	8.70	2.43
							35	6.77	2.29	7.12	2.33	7.47	2.37	7.66	2.38	7.83	2.40	8.19	2.44	8.55	2.48
							37	6.63	2.34	6.97	2.38	7.32	2.42	7.50	2.44	7.68	2.46	8.04	2.50	8.41	2.54
							39	6.48	2.40	6.83	2.44	7.18	2.48	7.36	2.50	7.54	2.52	7.90	2.56	8.27	2.59
							42	6.27	2.49	6.61	2.52	6.97	2.56	7.15	2.58	7.33	2.60	7.69	2.64	8.06	2.68
							44	6.12	2.54	6.47	2.58	6.83	2.62	7.00	2.64	7.19	2.66	7.55	2.70	7.92	2.74
							46	5.98	2.60	6.33	2.64	6.68	2.68	6.86	2.70	7.04	2.72	7.41	2.76	7.78	2.80
5000	6800				11800	148%	10	8.77	1.70	9.11	1.74	9.46	1.78	9.64	1.80	9.82	1.81	10.18	1.85	10.54	1.89
							12	8.62	1.75	8.96	1.79	9.31	1.82	9.49	1.84	9.67	1.86	10.03	1.90	10.40	1.93
							14	8.47	1.80	8.81	1.83	9.16	1.87	9.34	1.89	9.52	1.91	9.88	1.94	10.25	1.98
							16	8.31	1.84	8.66	1.88	9.01	1.92	9.19	1.94	9.37	1.96	9.73	1.99	10.10	2.03
							18	8.16	1.89	8.51	1.93	8.86	1.97	9.04	1.99	9.22	2.00	9.58	2.04	9.95	2.08
							20	8.01	1.94	8.36	1.98	8.71	2.02	8.89	2.04	9.07	2.05	9.43	2.09	9.80	2.13
							21	7.94	1.97	8.29	2.00	8.64	2.04	8.82	2.06	9.00	2.08	9.36	2.12	9.73	2.16
							23	7.79	2.02	8.14	2.05	8.49	2.09	8.67	2.11	8.85	2.13	9.21	2.17	9.58	2.21
							25	7.64	2.07	7.99	2.11	8.34	2.14	8.52	2.16	8.70	2.18	9.07	2.22	9.44	2.26
							27	7.49	2.12	7.84	2.16	8.19	2.20	8.37	2.22	8.55	2.24	8.92	2.27	9.29	2.31
							29	7.34	2.17	7.69	2.21	8.05	2.25	8.23	2.27	8.41	2.29	8.77	2.33	9.14	2.37
							31	7.19	2.23	7.54	2.27	7.90	2.30	8.08	2.32	8.26	2.34	8.63	2.38	9.00	2.42
							33	7.04	2.28	7.39	2.32	7.75	2.36	7.93	2.38	8.11	2.40	8.48	2.44	8.85	2.48
							35	6.89	2.34	7.25	2.38	7.60	2.42	7.80	2.43	7.97	2.45	8.34	2.49	8.71	2.53
							37	6.75	2.39	7.10	2.43	7.46	2.47	7.64	2.49	7.82	2.51	8.19	2.55	8.57	2.59
							39	6.60	2.45	6.95	2.49	7.31	2.53	7.49	2.55	7.68	2.57	8.05	2.61	8.42	2.65
							42	6.38	2.54	6.73	2.58	7.10	2.62	7.28	2.64	7.46	2.66	7.83	2.70	8.21	2.74
							44	6.23	2.60	6.59	2.64	6.95	2.68	7.13	2.70	7.32	2.72	7.69	2.76	8.06	2.80
							46	6.09	2.66	6.44	2.70	6.81	2.74	6.99	2.76	7.17	2.78	7.54	2.82	7.92	2.86
2000	2000	2000			6000	75%	10	5.30	1.30	7.48	1.33	7.62	1.36	7.71	1.38	7.80	1.40	8.02	1.42	8.28	1.45
							12	5.30	1.33	7.28	1.37	7.43	1.40	7.52	1.41	7.62	1.43	7.85	1.46	8.11	1.49
							14	5.30	1.37	7.08	1.40	7.24	1.43	7.34	1.45	7.44	1.46	7.68	1.49	7.96	1.52
							16	5.30	1.40	6.89	1.43	7.07	1.46	7.17	1.48	7.28	1.49	7.53	1.52	7.81	1.55
							18	5.30	1.44	6.72	1.47	6.90	1.50	7.00	1.52	7.12	1.53	7.38	1.56	7.68	1.59
							20	5.30	1.47	6.55	1.50	6.74	1.54	6.85	1.55	6.97	1.57	7.24	1.60	7.55	1.62
							21	5.30	1.49	6.46	1.52	6.66	1.55	6.78	1.57	6.90	1.58	7.17	1.61	7.49	1.64
							23	5.30	1.53	6.31	1.56	6.51	1.59	6.63	1.61	6.76	1.62	7.05	1.65	7.37	1.68
							25	5.30	1.57	6.16	1.60	6.38	1.63	6.50	1.65	6.63	1.66	6.93	1.69	7.26	1.72
							27	5.30	1.61	6.02	1.64	6.25	1.67	6.37	1.69	6.51	1.70	6.82	1.73	7.16	1.76
							29	5.30	1.65	5.88	1.68	6.12	1.71	6.26	1.73	6.40	1.74	6.72	1.77	7.07	1.80
							31	5.30	1.69	5.76	1.72	6.01	1.75	6.15	1.77	6.30	1.78	6.62	1.81	6.99	1.84
							33	5.30	1.73	5.64	1.77	5.90	1.80	6.05	1.81	6.20	1.83	6.54	1.85	6.92	1.88
							35	5.30	1.78	5.54	1.81	5.81	1.84	6.00	1.85	6.12	1.87	6.46	1.90	6.85	1.92
							37	5.30	1.82	5.44	1.85	5.72	1.88	5.87	1.90	6.04	1.91	6.39	1.94	6.79	1.97
							39	5.30	1.87	5.34	1.90	5.64	1.93	5.80	1.94	5.97	1.96	6.34	1.99	6.74	2.01
							42	5.30	1.94	5.22	1.97	5.53	2.00	5.70	2.01	5.88	2.03	6.26	2.06	6.68	2.08
							44	5.30	1.99	5.15	2.02	5.47	2.05	5.64	2.06	5.83	2.08	6.22	2.10	6.65	2.13
							46	5.30	2.04	5.09	2.07	5.42	2.10	5.60	2.11	5.79	2.13	6.19	2.15	6.63	2.18

* All figures comply with EN14511

1. Cooling capacity is based on 27°CDB / 19°CWB (indoor temperature), 35°CDB (outdoor temperature).
2. Heating capacity is based on 20°CDB (indoor temperature), 7°CDB/6°CWB (outdoor temperature).
3. Capacities are based on the following conditions : - Corresponding refrigerant piping length : 5m / - Level difference : 0m
4. The total ability of connected a indoor unit is up to 12kW
5. It is impossible to connect the indoor unit for one room only.
6. This data is reference data for temperature capacity trend.

6 AJ080FCJ4EH

1) Cooling

COOLING

Combination (Capacity Index)					Combination (Total)	Combination (%)	Outdoor Temperature (°C, DB)	Indoor Temperature(°C, WB)													
								14		16		18		19		20		22		24	
								TC(kW)	PI(kW)	TC(kW)	PI(kW)	TC(kW)	PI(kW)	TC(kW)	PI(kW)	TC(kW)	PI(kW)	TC(kW)	PI(kW)	TC(kW)	PI(kW)
2000	2000	2500			6500	81%	10	5.83	5.83	5.83	5.83	5.83	5.83	5.83	5.83	5.83	5.83	5.83	5.83	5.83	5.83
							12	5.83	5.83	5.83	5.83	5.83	5.83	5.83	5.83	5.83	5.83	5.83	5.83	5.83	5.83
							14	5.83	5.83	5.83	5.83	5.83	5.83	5.83	5.83	5.83	5.83	5.83	5.83	5.83	5.83
							16	5.83	5.83	5.83	5.83	5.83	5.83	5.83	5.83	5.83	5.83	5.83	5.83	5.83	5.83
							18	5.83	5.83	5.83	5.83	5.83	5.83	5.83	5.83	5.83	5.83	5.83	5.83	5.83	5.83
							20	5.83	5.83	5.83	5.83	5.83	5.83	5.83	5.83	5.83	5.83	5.83	5.83	5.83	5.83
							21	5.83	5.83	5.83	5.83	5.83	5.83	5.83	5.83	5.83	5.83	5.83	5.83	5.83	5.83
							23	5.83	5.83	5.83	5.83	5.83	5.83	5.83	5.83	5.83	5.83	5.83	5.83	5.83	5.83
							25	5.83	5.83	5.83	5.83	5.83	5.83	5.83	5.83	5.83	5.83	5.83	5.83	5.83	5.83
							27	5.83	5.83	5.83	5.83	5.83	5.83	5.83	5.83	5.83	5.83	5.83	5.83	5.83	5.83
							29	5.83	5.83	5.83	5.83	5.83	5.83	5.83	5.83	5.83	5.83	5.83	5.83	5.83	5.83
							31	5.83	5.83	5.83	5.83	5.83	5.83	5.83	5.83	5.83	5.83	5.83	5.83	5.83	5.83
							33	5.83	5.83	5.83	5.83	5.83	5.83	5.83	5.83	5.83	5.83	5.83	5.83	5.83	5.83
							35	5.83	5.83	5.83	5.83	5.83	5.83	5.83	5.83	5.83	5.83	5.83	5.83	5.83	5.83
							37	5.83	5.83	5.83	5.83	5.83	5.83	5.83	5.83	5.83	5.83	5.83	5.83	5.83	5.83
							39	5.83	5.83	5.83	5.83	5.83	5.83	5.83	5.83	5.83	5.83	5.83	5.83	5.83	5.83
							42	5.83	5.83	5.83	5.83	5.83	5.83	5.83	5.83	5.83	5.83	5.83	5.83	5.83	5.83
							44	5.83	5.83	5.83	5.83	5.83	5.83	5.83	5.83	5.83	5.83	5.83	5.83	5.83	5.83
							46	5.83	5.83	5.83	5.83	5.83	5.83	5.83	5.83	5.83	5.83	5.83	5.83	5.83	5.83
2000	2000	3500			7500	94%	10	6.63	6.63	6.63	6.63	6.63	6.63	6.63	6.63	6.63	6.63	6.63	6.63	6.63	6.63
							12	6.63	6.63	6.63	6.63	6.63	6.63	6.63	6.63	6.63	6.63	6.63	6.63	6.63	6.63
							14	6.63	6.63	6.63	6.63	6.63	6.63	6.63	6.63	6.63	6.63	6.63	6.63	6.63	6.63
							16	6.63	6.63	6.63	6.63	6.63	6.63	6.63	6.63	6.63	6.63	6.63	6.63	6.63	6.63
							18	6.63	6.63	6.63	6.63	6.63	6.63	6.63	6.63	6.63	6.63	6.63	6.63	6.63	6.63
							20	6.63	6.63	6.63	6.63	6.63	6.63	6.63	6.63	6.63	6.63	6.63	6.63	6.63	6.63
							21	6.63	6.63	6.63	6.63	6.63	6.63	6.63	6.63	6.63	6.63	6.63	6.63	6.63	6.63
							23	6.63	6.63	6.63	6.63	6.63	6.63	6.63	6.63	6.63	6.63	6.63	6.63	6.63	6.63
							25	6.63	6.63	6.63	6.63	6.63	6.63	6.63	6.63	6.63	6.63	6.63	6.63	6.63	6.63
							27	6.63	6.63	6.63	6.63	6.63	6.63	6.63	6.63	6.63	6.63	6.63	6.63	6.63	6.63
							29	6.63	6.63	6.63	6.63	6.63	6.63	6.63	6.63	6.63	6.63	6.63	6.63	6.63	6.63
							31	6.63	6.63	6.63	6.63	6.63	6.63	6.63	6.63	6.63	6.63	6.63	6.63	6.63	6.63
							33	6.63	6.63	6.63	6.63	6.63	6.63	6.63	6.63	6.63	6.63	6.63	6.63	6.63	6.63
							35	6.63	6.63	6.63	6.63	6.63	6.63	6.63	6.63	6.63	6.63	6.63	6.63	6.63	6.63
							37	6.63	6.63	6.63	6.63	6.63	6.63	6.63	6.63	6.63	6.63	6.63	6.63	6.63	6.63
							39	6.63	6.63	6.63	6.63	6.63	6.63	6.63	6.63	6.63	6.63	6.63	6.63	6.63	6.63
							42	6.63	6.63	6.63	6.63	6.63	6.63	6.63	6.63	6.63	6.63	6.63	6.63	6.63	6.63
							44	6.63	6.63	6.63	6.63	6.63	6.63	6.63	6.63	6.63	6.63	6.63	6.63	6.63	6.63
							46	6.63	6.63	6.63	6.63	6.63	6.63	6.63	6.63	6.63	6.63	6.63	6.63	6.63	6.63
2000	2000	5000			9000	113%	10	8.60	8.60	8.60	8.60	8.60	8.60	8.60	8.60	8.60	8.60	8.60	8.60	8.60	8.60
							12	8.45	8.45	8.45	8.45	8.45	8.45	8.45	8.45	8.45	8.45	8.45	8.45	8.45	8.45
							14	8.30	8.30	8.30	8.30	8.30	8.30	8.30	8.30	8.30	8.30	8.30	8.30	8.30	8.30
							16	8.15	8.15	8.15	8.15	8.15	8.15	8.15	8.15	8.15	8.15	8.15	8.15	8.15	8.15
							18	8.01	8.01	8.01	8.01	8.01	8.01	8.01	8.01	8.01	8.01	8.01	8.01	8.01	8.01
							20	7.86	7.86	7.86	7.86	7.86	7.86	7.86	7.86	7.86	7.86	7.86	7.86	7.86	7.86
							21	7.78	7.78	7.78	7.78	7.78	7.78	7.78	7.78	7.78	7.78	7.78	7.78	7.78	7.78
							23	7.64	7.64	7.64	7.64	7.64	7.64	7.64	7.64	7.64	7.64	7.64	7.64	7.64	7.64
							25	7.49	7.49	7.49	7.49	7.49	7.49	7.49	7.49	7.49	7.49	7.49	7.49	7.49	7.49
							27	7.34	7.34	7.34	7.34	7.34	7.34	7.34	7.34	7.34	7.34	7.34	7.34	7.34	7.34
							29	7.20	7.20	7.20	7.20	7.20	7.20	7.20	7.20	7.20	7.20	7.20	7.20	7.20	7.20
							31	7.05	7.05	7.05	7.05	7.05	7.05	7.05	7.05	7.05	7.05	7.05	7.05	7.05	7.05
							33	6.91	6.91	6.91	6.91	6.91	6.91	6.91	6.91	6.91	6.91	6.91	6.91	6.91	6.91
							35	6.76	6.76	6.76	6.76	6.76	6.76	6.76	6.76	6.76	6.76	6.76	6.76	6.76	6.76
							37	6.62	6.62	6.62	6.62	6.62	6.62	6.62	6.62	6.62	6.62	6.62	6.62	6.62	6.62
							39	6.47	6.47	6.47	6.47	6.47	6.47	6.47	6.47	6.47	6.47	6.47	6.47	6.47	6.47
							42	6.26	6.26	6.26	6.26	6.26	6.26	6.26	6.26	6.26	6.26	6.26	6.26	6.26	6.26
							44	6.11	6.11	6.11	6.11	6.11	6.11	6.11	6.11	6.11	6.11	6.11	6.11	6.11	6.11
							46	5.97	5.97	5.97	5.97	5.97	5.97	5.97	5.97	5.97	5.97	5.97	5.97	5.97	5.97
2000	2000	6800			10800	135%	10	8.60	8.60	8.60	8.60	8.60	8.60	8.60	8.60	8.60	8.60	8.60	8.60	8.60	8.60
							12	8.45	8.45	8.45	8.45	8.45	8.45	8.45	8.45	8.45	8.45	8.45	8.45	8.45	8.45
							14	8.30	8.30	8.30	8.30	8.30	8.30	8.30	8.30	8.30	8.30	8.30	8.30	8.30	8.30
							16	8.15	8.15	8.15	8.15	8.15	8.15	8.15	8.15	8.15	8.15	8.15	8.15	8.15	8.15
							18	8.01	8.01	8.01	8.01	8.01	8.01	8.01	8.01	8.01	8.01	8.01	8.01	8.01	8.01
							20	7.86	7.86	7.86	7.86	7.86	7.86	7.86	7.86	7.86	7.86	7.86	7.86	7.86	7.86
							21	7.78	7.78	7.78	7.78	7.78	7.78	7.78	7.78	7.78	7.78	7.78	7.78	7.78	7.78
							23	7.64	7.64	7.64	7.64	7.64	7.64	7.64	7.64	7.64	7.64	7.64	7.64	7.64	7.64
							25	7.49	7.49	7.49	7.49	7.49	7.49	7.49	7.49	7.49	7.49	7.49	7.49	7.49	7.49
							27	7.34	7.34	7.34	7.34	7.34	7.34	7.34	7.34	7.34	7.34	7.34	7.34	7.34	7.34
							29	7.20	7.20	7.20	7.20	7.20	7.20	7.20	7.20	7.20	7.20	7.20	7.20	7.20	7.20
							31	7.05	7.05	7.05	7.05	7.05	7.05	7.05	7.05	7.05	7.05	7.05	7.05	7.05	7.05
							33	6.91	6.91	6.91	6.91	6.91	6.91	6.91	6.91	6.91	6.91	6.91	6.91	6.91	6.91
							35	6.76	6.76	6.76	6.76	6.76	6.76	6.76	6.76	6.76	6.76	6.76	6.76	6.76	6.76
							37	6.62	6.62	6.62	6.62	6.62	6.62	6.62	6.62	6.62	6.62	6.62	6.62	6.62	6.62
							39	6.47	6.47	6.47	6.47	6.47	6.47	6.47	6.47	6.47	6.47	6.47	6.47	6.47	6.47
							42	6.26	6.26	6.26	6.26	6.26	6.26	6.26	6.26	6.26	6.26	6.26	6.26	6.26	6.26
							44	6.11	6.11	6.11	6.11	6.11	6.11	6.11	6.11	6.11	6.11	6.11	6.11	6.11	6.11
							46	5.97	5.97	5.97	5.97	5.97	5.97	5.97	5.97	5.97	5.97	5.97	5.97	5.97	5.97

* All figures comply with EN14511

1. Cooling capacity is based on 27°CDB / 19°CWB (indoor temperature), 35°CDB (outdoor temperature).
2. Heating capacity is based on 20°CDB (indoor temperature), 7°CDB/6°CWB (outdoor temperature).
3. Capacities are based on the following conditions : - Corresponding refrigerant piping length : 5m / - Level difference : 0m
4. The total ability of connected a indoor unit is up to 12kW
5. It is impossible to connect the indoor unit for one room only.
6. This data is reference data for temperature capacity trend.

1) Cooling

COOLING

Combination (Capacity Index)					Combination (Total)	Combination (%)	Outdoor Temperature (°C, DB)	Indoor Temperature(°C, WB)													
								14		16		18		19		20		22		24	
								TC(kW)	PI(kW)	TC(kW)	PI(kW)	TC(kW)	PI(kW)	TC(kW)	PI(kW)	TC(kW)	PI(kW)	TC(kW)	PI(kW)	TC(kW)	PI(kW)
2000	2500	2500			7000	88%	10	6.36	1.51	8.98	1.55	9.15	1.59	9.25	1.60	9.36	1.62	9.62	1.66	9.93	1.69
							12	6.36	1.55	8.73	1.59	8.91	1.62	9.02	1.64	9.14	1.66	9.42	1.69	9.74	1.73
							14	6.36	1.59	8.50	1.63	8.69	1.66	8.81	1.68	8.93	1.70	9.22	1.73	9.55	1.76
							16	6.36	1.63	8.27	1.67	8.48	1.70	8.60	1.72	8.73	1.74	9.03	1.77	9.38	1.80
							18	6.36	1.67	8.06	1.71	8.28	1.74	8.41	1.76	8.54	1.78	8.86	1.81	9.21	1.84
							20	6.36	1.71	7.85	1.75	8.09	1.79	8.22	1.80	8.36	1.82	8.69	1.85	9.06	1.89
							21	6.36	1.73	7.76	1.77	7.99	1.81	8.13	1.82	8.28	1.84	8.61	1.88	8.98	1.91
							23	6.36	1.78	7.57	1.81	7.82	1.85	7.96	1.87	8.11	1.89	8.46	1.92	8.85	1.95
							25	6.36	1.82	7.39	1.86	7.65	1.90	7.80	1.91	7.96	1.93	8.32	1.96	8.72	2.00
							27	6.36	1.87	7.22	1.91	7.49	1.94	7.65	1.96	7.82	1.98	8.18	2.01	8.60	2.04
							29	6.36	1.92	7.06	1.95	7.35	1.99	7.51	2.01	7.68	2.02	8.06	2.06	8.49	2.09
							31	6.36	1.97	6.91	2.00	7.21	2.04	7.38	2.05	7.56	2.07	7.95	2.10	8.39	2.14
							33	6.36	2.02	6.77	2.05	7.08	2.09	7.26	2.10	7.44	2.12	7.85	2.15	8.30	2.19
							35	6.36	2.07	6.64	2.10	6.97	2.14	7.20	2.15	7.34	2.15	7.76	2.20	8.22	2.24
							37	6.36	2.12	6.52	2.16	6.86	2.19	7.05	2.21	7.24	2.22	7.67	2.26	8.15	2.29
							39	6.36	2.17	6.41	2.21	6.76	2.24	6.96	2.26	7.16	2.28	7.60	2.31	8.09	2.34
							42	6.36	2.25	6.27	2.29	6.64	2.32	6.84	2.34	7.05	2.36	7.51	2.39	8.02	2.42
							44	6.36	2.31	6.18	2.35	6.57	2.38	6.77	2.40	6.99	2.41	7.47	2.45	7.99	2.48
							46	6.36	2.37	6.11	2.40	6.50	2.44	6.72	2.45	6.94	2.47	7.43	2.50	7.96	2.53
2000	2500	3500			8000	100%	10	8.49	1.51	8.82	1.54	9.16	1.57	9.33	1.59	9.50	1.61	9.85	1.64	10.21	1.67
							12	8.34	1.55	8.68	1.58	9.01	1.61	9.19	1.63	9.36	1.65	9.71	1.68	10.06	1.71
							14	8.19	1.59	8.53	1.62	8.87	1.66	9.04	1.67	9.21	1.69	9.56	1.72	9.92	1.75
							16	8.05	1.63	8.38	1.66	8.72	1.70	8.90	1.71	9.07	1.73	9.42	1.76	9.78	1.80
							18	7.90	1.67	8.24	1.71	8.58	1.74	8.75	1.76	8.92	1.77	9.28	1.81	9.63	1.84
							20	7.76	1.72	8.09	1.75	8.43	1.78	8.61	1.80	8.78	1.82	9.13	1.85	9.49	1.88
							21	7.68	1.74	8.02	1.77	8.36	1.81	8.53	1.82	8.71	1.84	9.06	1.87	9.42	1.91
							23	7.54	1.78	7.88	1.82	8.22	1.85	8.39	1.87	8.57	1.89	8.92	1.92	9.28	1.95
							25	7.39	1.83	7.73	1.86	8.07	1.90	8.25	1.91	8.42	1.93	8.78	1.96	9.13	2.00
							27	7.25	1.88	7.59	1.91	7.93	1.94	8.10	1.96	8.28	1.98	8.63	2.01	8.99	2.05
							29	7.10	1.92	7.44	1.96	7.79	1.99	7.96	2.01	8.14	2.03	8.49	2.06	8.85	2.09
							31	6.96	1.97	7.30	2.00	7.65	2.04	7.82	2.06	8.00	2.07	8.35	2.11	8.71	2.14
							33	6.82	2.02	7.16	2.05	7.50	2.09	7.68	2.11	7.85	2.12	8.21	2.16	8.57	2.19
							35	6.67	2.07	7.01	2.10	7.36	2.14	7.55	2.15	7.71	2.15	8.07	2.21	8.43	2.24
							37	6.53	2.12	6.87	2.15	7.22	2.19	7.40	2.20	7.57	2.22	7.93	2.26	8.29	2.29
							39	6.39	2.17	6.73	2.20	7.08	2.24	7.25	2.26	7.43	2.27	7.79	2.31	8.15	2.34
							42	6.18	2.25	6.52	2.28	6.87	2.32	7.04	2.33	7.22	2.35	7.58	2.39	7.94	2.42
							44	6.03	2.30	6.38	2.33	6.73	2.37	6.90	2.39	7.08	2.40	7.44	2.44	7.81	2.48
							46	5.89	2.35	6.24	2.39	6.59	2.42	6.76	2.44	6.94	2.46	7.30	2.49	7.67	2.53
2000	2500	5000			9500	119%	10	8.67	1.54	9.01	1.57	9.36	1.60	9.53	1.62	9.71	1.63	10.06	1.67	10.42	1.70
							12	8.52	1.58	8.86	1.61	9.21	1.64	9.38	1.66	9.56	1.68	9.91	1.71	10.28	1.74
							14	8.37	1.62	8.71	1.65	9.06	1.69	9.23	1.70	9.41	1.72	9.77	1.75	10.13	1.79
							16	8.22	1.66	8.56	1.70	8.91	1.73	9.08	1.75	9.26	1.76	9.62	1.80	9.98	1.83
							18	8.07	1.71	8.41	1.74	8.76	1.77	8.94	1.79	9.11	1.81	9.47	1.84	9.84	1.87
							20	7.92	1.75	8.26	1.78	8.61	1.82	8.79	1.83	8.97	1.85	9.33	1.89	9.69	1.92
							21	7.85	1.77	8.19	1.81	8.54	1.84	8.72	1.86	8.89	1.87	9.25	1.91	9.62	1.94
							23	7.70	1.82	8.04	1.85	8.39	1.89	8.57	1.90	8.75	1.92	9.11	1.95	9.47	1.99
							25	7.55	1.86	7.89	1.90	8.25	1.93	8.42	1.95	8.60	1.97	8.96	2.00	9.33	2.04
							27	7.40	1.91	7.75	1.95	8.10	1.98	8.28	2.00	8.46	2.01	8.82	2.05	9.18	2.08
							29	7.25	1.96	7.60	1.99	7.95	2.03	8.13	2.05	8.31	2.06	8.67	2.10	9.04	2.13
							31	7.11	2.01	7.45	2.04	7.81	2.08	7.99	2.09	8.16	2.11	8.53	2.15	8.90	2.18
							33	6.96	2.06	7.31	2.09	7.66	2.13	7.84	2.14	8.02	2.16	8.38	2.20	8.75	2.23
							35	6.81	2.11	7.16	2.14	7.52	2.18	7.71	2.19	7.88	2.21	8.24	2.25	8.61	2.28
							37	6.67	2.16	7.02	2.19	7.37	2.23	7.55	2.25	7.73	2.26	8.10	2.30	8.47	2.34
							39	6.52	2.21	6.87	2.24	7.23	2.28	7.41	2.30	7.59	2.32	7.95	2.35	8.32	2.39
							42	6.31	2.29	6.66	2.32	7.01	2.36	7.19	2.38	7.37	2.40	7.74	2.43	8.11	2.47
							44	6.16	2.34	6.51	2.38	6.87	2.41	7.05	2.43	7.23	2.45	7.60	2.49	7.97	2.52
							46	6.02	2.39	6.37	2.43	6.73	2.47	6.91	2.49	7.09	2.50	7.46	2.54	7.83	2.58
2000	2500	6800			11300	141%	10	8.67	1.54	9.35	1.63	9.71	1.66	9.89	1.68	10.07	1.69	10.44	1.73	10.81	1.76
							12	8.52	1.58	9.19	1.67	9.55	1.70	9.73	1.72	9.92	1.74	10.29	1.77	10.66	1.81
							14	8.37	1.62	9.04	1.71	9.40	1.75	9.58	1.76	9.76	1.78	10.13	1.82	10.51	1.85
							16	8.22	1.66	8.88	1.76	9.24	1.79	9.43	1.81	9.61	1.83	9.98	1.86	10.36	1.90
							18	8.07	1.71	8.73	1.80	9.09	1.84	9.27	1.86	9.46	1.87	9.83	1.91	10.21	1.94
							20	7.92	1.75	8.57	1.85	8.94	1.88	9.12	1.90	9.30	1.92	9.68	1.95	10.05	1.99
							21	7.85	1.77	8.50	1.87	8.86	1.91	9.04	1.93	9.23	1.94	9.60	1.98	9.98	2.01
							23	7.70	1.82	8.34	1.92	8.71	1.95	8.89	1.97	9.08	1.99	9.45	2.03	9.83	2.06
							25	7.55	1.86	8.19	1.97	8.56	2.00	8.74	2.02	8.92	2.04	9.30	2.07	9.68	2.11
							27	7.40	1.91	8.04	2.02	8.40	2.05	8.59	2.07	8.77	2.09	9.15	2.12	9.53	2.16
							29	7.25	1.96	7.89	2.07	8.25	2.10	8.44	2.12	8.62	2.14	9.00	2.17	9.38	2.21
							31	7.11	2.01	7.74	2.12	8.10	2.15	8.29	2.17	8.47	2.19	8.85	2.23	9.23	2.26
							33	6.96	2.06	7.58	2.17	7.95	2.20	8.14	2.22	8.32	2.24	8.70	2.28	9.08	2.31
							35	6.81	2.11	7.43	2.22	7.80	2.26	8.00	2.27	8.17	2.29	8.55	2.33	8.93	2.37
							37	6.67	2.16	7.28	2.27	7.65	2.31	7.84	2.33	8.02	2.35	8.40	2.38	8.79	2.42
							39	6.52	2.21	7.13	2.33	7.50	2.36	7.69	2.38	7.87	2.40	8.25	2.44	8.64	2.48
							42	6.31	2.29	6.91	2.41	7.28	2.45	7.46	2.46	7.65	2.48	8.03	2.52	8.42	2.56
							44	6.16	2.34	6.76	2.46	7.13	2.50	7.32	2.52	7.50	2.54	7.88	2.58	8.27	2.61
							46	6.02	2.39	6.61	2.52	6.98	2.56	7.17	2.58	7.36	2.60	7.74	2.63	8.12	2.67

* All figures comply with EN14511

1. Cooling capacity is based on 27°CDB / 19°CWB (indoor temperature), 35°CDB (outdoor temperature).
2. Heating capacity is based on 20°CDB (indoor temperature), 7°CDB/6°CWB (outdoor temperature).
3. Capacities are based on the following conditions : - Corresponding refrigerant piping length : 5m / - Level difference : 0m
4. The total ability of connected a indoor unit is up to 12kW
5. It is impossible to connect the indoor unit for one room only.
6. This data is reference data for temperature capacity trend.

6 AJ080FCJ4EH

1) Cooling

	Combination (Capacity Index)					Combination (Total)	Combination (%)	Outdoor Temperature (°C, DB)	Indoor Temperature(°C, WB)													
									14		16		18		19		20		22		24	
									TC(kW)	PI(kW)	TC(kW)	PI(kW)	TC(kW)	PI(kW)	TC(kW)	PI(kW)	TC(kW)	PI(kW)	TC(kW)	PI(kW)	TC(kW)	PI(kW)
COOLING	2000	3500	3500			9000	113%	10	8.59	1.54	8.93	1.57	9.27	1.60	9.44	1.62	9.62	1.63	9.97	1.67	10.33	1.70
								12	8.44	1.58	8.78	1.61	9.12	1.64	9.30	1.66	9.47	1.68	9.82	1.71	10.18	1.74
								14	8.29	1.62	8.63	1.65	8.97	1.69	9.15	1.70	9.32	1.72	9.68	1.75	10.04	1.79
								16	8.14	1.66	8.48	1.70	8.83	1.73	9.00	1.75	9.18	1.76	9.53	1.80	9.89	1.83
								18	8.00	1.71	8.34	1.74	8.68	1.77	8.86	1.79	9.03	1.81	9.39	1.84	9.75	1.87
								20	7.85	1.75	8.19	1.78	8.53	1.82	8.71	1.83	8.89	1.85	9.24	1.89	9.60	1.92
								21	7.77	1.77	8.12	1.81	8.46	1.84	8.64	1.86	8.81	1.87	9.17	1.91	9.53	1.94
								23	7.63	1.82	7.97	1.85	8.32	1.89	8.49	1.90	8.67	1.92	9.02	1.95	9.39	1.99
								25	7.48	1.86	7.82	1.90	8.17	1.93	8.35	1.95	8.52	1.97	8.88	2.00	9.24	2.04
								27	7.33	1.91	7.68	1.95	8.03	1.98	8.20	2.00	8.38	2.01	8.74	2.05	9.10	2.08
								29	7.19	1.96	7.53	1.99	7.88	2.03	8.06	2.05	8.23	2.06	8.59	2.10	8.96	2.13
								31	7.04	2.01	7.39	2.04	7.74	2.08	7.91	2.09	8.09	2.11	8.45	2.15	8.81	2.18
								33	6.90	2.06	7.24	2.09	7.59	2.13	7.77	2.14	7.95	2.16	8.31	2.20	8.67	2.23
								35	6.75	2.11	7.10	2.14	7.45	2.18	7.64	2.19	7.80	2.21	8.17	2.25	8.53	2.28
								37	6.61	2.16	6.95	2.19	7.31	2.23	7.48	2.25	7.66	2.26	8.02	2.30	8.39	2.34
								39	6.46	2.21	6.81	2.24	7.16	2.28	7.34	2.30	7.52	2.32	7.88	2.35	8.25	2.39
								42	6.25	2.29	6.60	2.32	6.95	2.36	7.13	2.38	7.31	2.40	7.67	2.43	8.04	2.47
								44	6.11	2.34	6.45	2.38	6.81	2.41	6.99	2.43	7.17	2.45	7.53	2.49	7.90	2.52
								46	5.96	2.39	6.31	2.43	6.67	2.47	6.85	2.49	7.03	2.50	7.39	2.54	7.76	2.58
	2000	3500	5000			10500	131%	10	9.00	1.59	9.35	1.62	9.71	1.65	9.89	1.67	10.07	1.69	10.44	1.72	10.81	1.75
								12	8.84	1.63	9.19	1.66	9.55	1.70	9.73	1.71	9.92	1.73	10.29	1.76	10.66	1.80
								14	8.68	1.67	9.04	1.71	9.40	1.74	9.58	1.76	9.76	1.77	10.13	1.81	10.51	1.84
								16	8.53	1.72	8.88	1.75	9.24	1.78	9.43	1.80	9.61	1.82	9.98	1.85	10.36	1.89
								18	8.37	1.76	8.73	1.79	9.09	1.83	9.27	1.85	9.46	1.86	9.83	1.90	10.21	1.93
								20	8.22	1.81	8.57	1.84	8.94	1.88	9.12	1.89	9.30	1.91	9.68	1.95	10.05	1.98
								21	8.14	1.83	8.50	1.86	8.86	1.90	9.04	1.92	9.23	1.93	9.60	1.97	9.98	2.00
								23	7.99	1.88	8.34	1.91	8.71	1.95	8.89	1.96	9.08	1.98	9.45	2.02	9.83	2.05
								25	7.83	1.92	8.19	1.96	8.56	1.99	8.74	2.01	8.92	2.03	9.30	2.07	9.68	2.10
								27	7.68	1.97	8.04	2.01	8.40	2.04	8.59	2.06	8.77	2.08	9.15	2.11	9.53	2.15
								29	7.53	2.02	7.89	2.06	8.25	2.09	8.44	2.11	8.62	2.13	9.00	2.16	9.38	2.20
								31	7.37	2.07	7.74	2.11	8.10	2.14	8.29	2.16	8.47	2.18	8.85	2.22	9.23	2.25
								33	7.22	2.12	7.58	2.16	7.95	2.19	8.14	2.21	8.32	2.23	8.70	2.27	9.08	2.30
								35	7.07	2.17	7.43	2.21	7.80	2.25	8.00	2.26	8.17	2.28	8.55	2.32	8.93	2.36
								37	6.92	2.23	7.28	2.26	7.65	2.30	7.84	2.32	8.02	2.34	8.40	2.37	8.79	2.41
								39	6.77	2.28	7.13	2.32	7.50	2.35	7.69	2.37	7.87	2.39	8.25	2.43	8.64	2.46
								42	6.54	2.36	6.91	2.40	7.28	2.43	7.46	2.45	7.65	2.47	8.03	2.51	8.42	2.55
								44	6.39	2.42	6.76	2.45	7.13	2.49	7.32	2.51	7.50	2.53	7.88	2.57	8.27	2.60
								46	6.24	2.47	6.61	2.51	6.98	2.55	7.17	2.57	7.36	2.58	7.74	2.62	8.12	2.66
	2000	5000	5000			12000	150%	10	9.00	1.59	9.35	1.65	9.71	1.68	9.89	1.70	10.07	1.72	10.44	1.75	10.81	1.79
								12	8.84	1.63	9.19	1.69	9.55	1.73	9.73	1.74	9.92	1.76	10.29	1.80	10.66	1.83
								14	8.68	1.67	9.04	1.74	9.40	1.77	9.58	1.79	9.76	1.81	10.13	1.84	10.51	1.88
								16	8.53	1.72	8.88	1.78	9.24	1.82	9.43	1.83	9.61	1.85	9.98	1.89	10.36	1.92
								18	8.37	1.76	8.73	1.83	9.09	1.86	9.27	1.88	9.46	1.90	9.83	1.93	10.21	1.97
								20	8.22	1.81	8.57	1.87	8.94	1.91	9.12	1.93	9.30	1.94	9.68	1.98	10.05	2.02
								21	8.14	1.83	8.50	1.90	8.86	1.93	9.04	1.95	9.23	1.97	9.60	2.00	9.98	2.04
								23	7.99	1.88	8.34	1.94	8.71	1.98	8.89	2.00	9.08	2.02	9.45	2.05	9.83	2.09
								25	7.83	1.92	8.19	1.99	8.56	2.03	8.74	2.05	8.92	2.07	9.30	2.10	9.68	2.14
								27	7.68	1.97	8.04	2.04	8.40	2.08	8.59	2.10	8.77	2.12	9.15	2.15	9.53	2.19
								29	7.53	2.02	7.89	2.09	8.25	2.13	8.44	2.15	8.62	2.17	9.00	2.20	9.38	2.24
								31	7.37	2.07	7.74	2.14	8.10	2.18	8.29	2.20	8.47	2.22	8.85	2.25	9.23	2.29
								33	7.22	2.12	7.58	2.20	7.95	2.23	8.14	2.25	8.32	2.27	8.70	2.31	9.08	2.34
								35	7.07	2.17	7.43	2.25	7.80	2.29	8.00	2.30	8.17	2.32	8.55	2.36	8.93	2.40
								37	6.92	2.23	7.28	2.30	7.65	2.34	7.84	2.36	8.02	2.38	8.40	2.42	8.79	2.45
								39	6.77	2.28	7.13	2.36	7.50	2.39	7.69	2.41	7.87	2.43	8.25	2.47	8.64	2.51
								42	6.54	2.36	6.91	2.44	7.28	2.48	7.46	2.50	7.65	2.52	8.03	2.55	8.42	2.59
								44	6.39	2.42	6.76	2.50	7.13	2.53	7.32	2.55	7.50	2.57	7.88	2.61	8.27	2.65
								46	6.24	2.47	6.61	2.55	6.98	2.59	7.17	2.61	7.36	2.63	7.74	2.67	8.12	2.71
	2500	2500	2500			7500	94%	10	8.47	1.48	8.80	1.51	9.14	1.54	9.31	1.56	9.48	1.58	9.83	1.61	10.18	1.64
								12	8.32	1.52	8.65	1.55	8.99	1.58	9.16	1.60	9.33	1.62	9.68	1.65	10.04	1.68
								14	8.17	1.56	8.51	1.59	8.85	1.62	9.02	1.64	9.19	1.66	9.54	1.69	9.89	1.72
								16	8.03	1.60	8.36	1.63	8.70	1.67	8.87	1.68	9.05	1.70	9.39	1.73	9.75	1.76
								18	7.88	1.64	8.22	1.68	8.56	1.71	8.73	1.72	8.90	1.74	9.25	1.77	9.61	1.81
								20	7.74	1.69	8.07	1.72	8.41	1.75	8.58	1.77	8.76	1.78	9.11	1.82	9.46	1.85
								21	7.66	1.71	8.00	1.74	8.34	1.77	8.51	1.79	8.69	1.81	9.04	1.84	9.39	1.87
								23	7.52	1.75	7.85	1.78	8.20	1.82	8.37	1.83	8.54	1.85	8.89	1.88	9.25	1.92
								25	7.37	1.80	7.71	1.83	8.05	1.86	8.23	1.88	8.40	1.90	8.75	1.93	9.11	1.96
								27	7.23	1.84	7.57	1.87	7.91	1.91	8.08	1.92	8.26	1.94	8.61	1.97	8.97	2.01
								29	7.09	1.89	7.42	1.92	7.77	1.95	7.94	1.97	8.12	1.99	8.47	2.02	8.83	2.05
								31	6.94	1.93	7.28	1.97	7.63	2.00	7.80	2.02	7.97	2.03	8.33	2.07	8.69	2.10
								33	6.80	1.98	7.14	2.01	7.48	2.05	7.66	2.07	7.83	2.08	8.19	2.12	8.55	2.15
								35	6.66	2.03	7.00	2.06	7.34	2.10	7.53	2.11	7.69	2.13	8.05	2.17	8.41	2.20
								37	6.51	2.08	6.85	2.11	7.20	2.15	7.38	2.16	7.55	2.18	7.91	2.22	8.27	2.25
								39	6.37	2.13	6.71	2.16	7.06	2.20	7.24	2.21	7.41	2.23	7.77	2.27	8.13	2.30
								42	6.16	2.20	6.50	2.24	6.85	2.27	7.03	2.29	7.20	2.31	7.56	2.34	7.92	2.38
								44	6.02	2.25	6.36	2.29	6.71	2.33	6.89	2.34	7.06	2.36	7.42	2.40	7.78	2.43
								46	5.88	2.31	6.22	2.34	6.57	2.38	6.75	2.40	6.92	2.41	7.28	2.45	7.65	2.48

* All figures comply with EN14511

1. Cooling capacity is based on 27°CDB / 19°CWB (indoor temperature), 35°CDB (outdoor temperature).
2. Heating capacity is based on 20°CDB (indoor temperature), 7°CDB/6°CWB (outdoor temperature).
3. Capacities are based on the following conditions : - Corresponding refrigerant piping length : 5m / - Level difference : 0m
4. The total ability of connected a indoor unit is up to 12kW
5. It is impossible to connect the indoor unit for one room only.
6. This data is reference data for temperature capacity trend.

1) Cooling

COOLING

Combination (Capacity Index)					Combination (Total)	Combination (%)	Outdoor Temperature (°C, DB)	Indoor Temperature(°C, WB)													
								14		16		18		19		20		22		24	
								TC(kW)	PI(kW)	TC(kW)	PI(kW)	TC(kW)	PI(kW)	TC(kW)	PI(kW)	TC(kW)	PI(kW)	TC(kW)	PI(kW)	TC(kW)	PI(kW)
2500	2500	3500			8500	106%	10	8.56	1.50	8.89	1.53	9.23	1.57	9.41	1.58	9.58	1.60	9.93	1.63	10.29	1.66
							12	8.41	1.54	8.74	1.57	9.09	1.61	9.26	1.62	9.43	1.64	9.79	1.67	10.14	1.70
							14	8.26	1.58	8.60	1.62	8.94	1.65	9.11	1.66	9.29	1.68	9.64	1.71	10.00	1.74
							16	8.11	1.62	8.45	1.66	8.79	1.69	8.97	1.71	9.14	1.72	9.49	1.76	9.85	1.79
							18	7.96	1.67	8.30	1.70	8.65	1.73	8.82	1.75	9.00	1.77	9.35	1.80	9.71	1.83
							20	7.82	1.71	8.16	1.74	8.50	1.78	8.68	1.79	8.85	1.81	9.21	1.84	9.56	1.88
							21	7.74	1.73	8.08	1.77	8.43	1.80	8.60	1.81	8.78	1.83	9.13	1.86	9.49	1.90
							23	7.60	1.78	7.94	1.81	8.28	1.84	8.46	1.86	8.63	1.88	8.99	1.91	9.35	1.94
							25	7.45	1.82	7.79	1.85	8.14	1.89	8.31	1.91	8.49	1.92	8.85	1.96	9.21	1.99
							27	7.31	1.87	7.65	1.90	7.99	1.93	8.17	1.95	8.35	1.97	8.70	2.00	9.06	2.04
							29	7.16	1.91	7.50	1.95	7.85	1.98	8.03	2.00	8.20	2.02	8.56	2.05	8.92	2.08
							31	7.02	1.96	7.36	2.00	7.71	2.03	7.88	2.05	8.06	2.06	8.42	2.10	8.78	2.13
							33	6.87	2.01	7.21	2.04	7.56	2.08	7.74	2.10	7.92	2.11	8.28	2.15	8.64	2.18
							35	6.73	2.06	7.07	2.09	7.42	2.13	7.61	2.14	7.77	2.16	8.13	2.20	8.50	2.23
							37	6.58	2.11	6.93	2.14	7.28	2.18	7.45	2.19	7.63	2.21	7.99	2.25	8.36	2.28
							39	6.44	2.16	6.78	2.19	7.13	2.23	7.31	2.25	7.49	2.26	7.85	2.30	8.22	2.33
							42	6.22	2.23	6.57	2.27	6.92	2.31	7.10	2.32	7.28	2.34	7.64	2.38	8.01	2.41
							44	6.08	2.29	6.43	2.32	6.78	2.36	6.96	2.38	7.14	2.39	7.50	2.43	7.87	2.46
							46	5.94	2.34	6.29	2.38	6.64	2.41	6.82	2.43	7.00	2.45	7.36	2.48	7.73	2.52
2500	2500	5000			10000	125%	10	8.73	1.55	9.07	1.58	9.42	1.62	9.59	1.63	9.77	1.65	10.13	1.68	10.49	1.72
							12	8.57	1.59	8.92	1.63	9.27	1.66	9.44	1.68	9.62	1.69	9.98	1.73	10.34	1.76
							14	8.42	1.63	8.77	1.67	9.12	1.70	9.29	1.72	9.47	1.73	9.83	1.77	10.19	1.80
							16	8.27	1.68	8.62	1.71	8.97	1.74	9.14	1.76	9.32	1.78	9.68	1.81	10.05	1.85
							18	8.12	1.72	8.47	1.76	8.82	1.79	8.99	1.81	9.17	1.82	9.53	1.86	9.90	1.89
							20	7.97	1.77	8.32	1.80	8.67	1.83	8.85	1.85	9.03	1.87	9.39	1.90	9.75	1.94
							21	7.90	1.79	8.24	1.82	8.59	1.86	8.77	1.87	8.95	1.89	9.31	1.93	9.68	1.96
							23	7.75	1.83	8.09	1.87	8.45	1.90	8.62	1.92	8.80	1.94	9.17	1.97	9.53	2.01
							25	7.60	1.88	7.95	1.92	8.30	1.95	8.48	1.97	8.66	1.99	9.02	2.02	9.39	2.05
							27	7.45	1.93	7.80	1.96	8.15	2.00	8.33	2.02	8.51	2.03	8.87	2.07	9.24	2.10
							29	7.30	1.98	7.65	2.01	8.00	2.05	8.18	2.06	8.36	2.08	8.73	2.12	9.10	2.15
							31	7.15	2.03	7.50	2.06	7.86	2.10	8.04	2.11	8.22	2.13	8.58	2.17	8.95	2.20
							33	7.01	2.07	7.36	2.11	7.71	2.15	7.89	2.16	8.07	2.18	8.44	2.22	8.81	2.25
							35	6.86	2.13	7.21	2.16	7.57	2.20	7.76	2.21	7.93	2.23	8.29	2.27	8.67	2.30
							37	6.71	2.18	7.06	2.21	7.42	2.25	7.60	2.27	7.78	2.28	8.15	2.32	8.52	2.36
							39	6.57	2.23	6.92	2.26	7.28	2.30	7.46	2.32	7.64	2.34	8.01	2.37	8.38	2.41
							42	6.35	2.31	6.70	2.34	7.06	2.38	7.24	2.40	7.42	2.42	7.79	2.45	8.16	2.49
							44	6.20	2.36	6.56	2.40	6.91	2.44	7.10	2.45	7.28	2.47	7.65	2.51	8.02	2.55
							46	6.06	2.42	6.41	2.45	6.77	2.49	6.95	2.51	7.14	2.53	7.51	2.56	7.88	2.60
2500	2500	6800			11800	148%	10	8.73	1.55	9.35	1.65	9.71	1.68	9.89	1.70	10.07	1.72	10.44	1.75	10.81	1.79
							12	8.57	1.59	9.19	1.69	9.55	1.73	9.73	1.74	9.92	1.76	10.29	1.80	10.66	1.83
							14	8.42	1.63	9.04	1.74	9.40	1.77	9.58	1.79	9.76	1.81	10.13	1.84	10.51	1.88
							16	8.27	1.68	8.88	1.78	9.24	1.82	9.43	1.83	9.61	1.85	9.98	1.89	10.36	1.92
							18	8.12	1.72	8.73	1.83	9.09	1.86	9.27	1.88	9.46	1.90	9.83	1.93	10.21	1.97
							20	7.97	1.77	8.57	1.87	8.94	1.91	9.12	1.93	9.30	1.94	9.68	1.98	10.05	2.02
							21	7.90	1.79	8.50	1.90	8.86	1.93	9.04	1.95	9.23	1.97	9.60	2.00	9.98	2.04
							23	7.75	1.83	8.34	1.94	8.71	1.98	8.89	2.00	9.08	2.02	9.45	2.05	9.83	2.09
							25	7.60	1.88	8.19	1.99	8.56	2.03	8.74	2.05	8.92	2.07	9.30	2.10	9.68	2.14
							27	7.45	1.93	8.04	2.04	8.40	2.08	8.59	2.10	8.77	2.12	9.15	2.15	9.53	2.19
							29	7.30	1.98	7.89	2.09	8.25	2.13	8.44	2.15	8.62	2.17	9.00	2.20	9.38	2.24
							31	7.15	2.03	7.74	2.14	8.10	2.18	8.29	2.20	8.47	2.22	8.85	2.25	9.23	2.29
							33	7.01	2.07	7.58	2.20	7.95	2.23	8.14	2.25	8.32	2.27	8.70	2.31	9.08	2.34
							35	6.86	2.13	7.43	2.25	7.80	2.29	8.00	2.30	8.17	2.32	8.55	2.36	8.93	2.40
							37	6.71	2.18	7.28	2.30	7.65	2.34	7.84	2.36	8.02	2.38	8.40	2.42	8.79	2.45
							39	6.57	2.23	7.13	2.36	7.50	2.39	7.69	2.41	7.87	2.43	8.25	2.47	8.64	2.51
							42	6.35	2.31	6.91	2.44	7.28	2.48	7.46	2.50	7.65	2.52	8.03	2.55	8.42	2.59
							44	6.20	2.36	6.76	2.50	7.13	2.53	7.32	2.55	7.50	2.57	7.88	2.61	8.27	2.65
							46	6.06	2.42	6.61	2.55	6.98	2.59	7.17	2.61	7.36	2.63	7.74	2.67	8.12	2.71
2500	3500	3500			9500	119%	10	8.65	1.53	8.99	1.56	9.33	1.59	9.51	1.61	9.68	1.63	10.04	1.66	10.40	1.69
							12	8.50	1.57	8.84	1.60	9.18	1.64	9.36	1.65	9.53	1.67	9.89	1.70	10.25	1.73
							14	8.35	1.61	8.69	1.65	9.03	1.68	9.21	1.69	9.38	1.71	9.74	1.74	10.10	1.78
							16	8.20	1.65	8.54	1.69	8.89	1.72	9.06	1.74	9.24	1.75	9.59	1.79	9.96	1.82
							18	8.05	1.70	8.39	1.73	8.74	1.76	8.91	1.78	9.09	1.80	9.45	1.83	9.81	1.87
							20	7.90	1.74	8.24	1.78	8.59	1.81	8.77	1.83	8.94	1.84	9.30	1.88	9.67	1.91
							21	7.83	1.76	8.17	1.80	8.52	1.83	8.69	1.85	8.87	1.87	9.23	1.90	9.59	1.93
							23	7.68	1.81	8.02	1.84	8.37	1.88	8.55	1.89	8.72	1.91	9.08	1.95	9.45	1.98
							25	7.53	1.86	7.87	1.89	8.22	1.92	8.40	1.94	8.58	1.96	8.94	1.99	9.30	2.03
							27	7.38	1.90	7.73	1.94	8.08	1.97	8.26	1.99	8.43	2.01	8.79	2.04	9.16	2.07
							29	7.24	1.95	7.58	1.98	7.93	2.02	8.11	2.04	8.29	2.05	8.65	2.09	9.02	2.12
							31	7.09	2.00	7.44	2.03	7.79	2.07	7.96	2.08	8.14	2.10	8.51	2.14	8.87	2.17
							33	6.94	2.05	7.29	2.08	7.64	2.12	7.82	2.13	8.00	2.15	8.36	2.19	8.73	2.22
							35	6.80	2.10	7.14	2.13	7.50	2.17	7.69	2.18	7.86	2.20	8.22	2.24	8.59	2.27
							37	6.65	2.15	7.00	2.18	7.35	2.22	7.53	2.24	7.71	2.25	8.08	2.29	8.44	2.32
							39	6.51	2.20	6.86	2.23	7.21	2.27	7.39	2.29	7.57	2.31	7.93	2.34	8.30	2.38
							42	6.29	2.28	6.64	2.31	7.00	2.35	7.17	2.37	7.36	2.38	7.72	2.42	8.09	2.46
							44	6.15	2.33	6.50	2.37	6.85	2.40	7.03	2.42	7.21	2.44	7.58	2.47	7.95	2.51
							46	6.00	2.38	6.35	2.42	6.71	2.46	6.89	2.47	7.07	2.49	7.44	2.53	7.81	2.57

* All figures comply with EN14511

1. Cooling capacity is based on 27°CDB / 19°CWB (indoor temperature), 35°CDB (outdoor temperature).
2. Heating capacity is based on 20°CDB (indoor temperature), 7°CDB/6°CWB (outdoor temperature).
3. Capacities are based on the following conditions : - Corresponding refrigerant piping length : 5m / - Level difference : 0m
4. The total ability of connected a indoor unit is up to 12kW
5. It is impossible to connect the indoor unit for one room only.
6. This data is reference data for temperature capacity trend.

6 AJ080FCJ4EH

1) Cooling

Combination (Capacity Index)					Combination (Total)	Combination (%)	Outdoor Temperature (°C, DB)	Indoor Temperature(°C, WB)													
								14		16		18		19		20		22		24	
								TC(kW)	PI(kW)	TC(kW)	PI(kW)	TC(kW)	PI(kW)	TC(kW)	PI(kW)	TC(kW)	PI(kW)	TC(kW)	PI(kW)	TC(kW)	PI(kW)
COOLING							10	9.00	1.59	9.35	1.62	9.71	1.65	9.89	1.67	10.07	1.69	10.44	1.72	10.81	1.75
							12	8.84	1.63	9.19	1.66	9.55	1.70	9.73	1.71	9.92	1.73	10.29	1.76	10.66	1.80
							14	8.68	1.67	9.04	1.71	9.40	1.74	9.58	1.76	9.76	1.77	10.13	1.81	10.51	1.84
							16	8.53	1.72	8.88	1.75	9.24	1.78	9.43	1.80	9.61	1.82	9.98	1.85	10.36	1.89
							18	8.37	1.76	8.73	1.79	9.09	1.83	9.27	1.85	9.46	1.86	9.83	1.90	10.21	1.93
							20	8.22	1.81	8.57	1.84	8.94	1.88	9.12	1.89	9.30	1.91	9.68	1.95	10.05	1.98
							21	8.14	1.83	8.50	1.86	8.86	1.90	9.04	1.92	9.23	1.93	9.60	1.97	9.98	2.00
							23	7.99	1.88	8.34	1.91	8.71	1.95	8.89	1.96	9.08	1.98	9.45	2.02	9.83	2.05
							25	7.83	1.92	8.19	1.96	8.56	1.99	8.74	2.01	8.92	2.03	9.30	2.07	9.68	2.10
2500	3500	5000			11000	138%	27	7.68	1.97	8.04	2.01	8.40	2.04	8.59	2.06	8.77	2.08	9.15	2.11	9.53	2.15
							29	7.53	2.02	7.89	2.06	8.25	2.09	8.44	2.11	8.62	2.13	9.00	2.16	9.38	2.20
							31	7.37	2.07	7.74	2.11	8.10	2.14	8.29	2.16	8.47	2.18	8.85	2.22	9.23	2.25
							33	7.22	2.12	7.58	2.16	7.95	2.19	8.14	2.21	8.32	2.23	8.70	2.27	9.08	2.30
							35	7.07	2.17	7.43	2.21	7.80	2.25	8.00	2.26	8.17	2.28	8.55	2.32	8.93	2.36
							37	6.92	2.23	7.28	2.26	7.65	2.30	7.84	2.32	8.02	2.34	8.40	2.37	8.79	2.41
							39	6.77	2.28	7.13	2.32	7.50	2.35	7.69	2.37	7.87	2.39	8.25	2.43	8.64	2.46
							42	6.54	2.36	6.91	2.40	7.28	2.43	7.46	2.45	7.65	2.47	8.03	2.51	8.42	2.55
							44	6.39	2.42	6.76	2.45	7.13	2.49	7.32	2.51	7.50	2.53	7.88	2.57	8.27	2.60
							46	6.24	2.47	6.61	2.51	6.98	2.55	7.17	2.57	7.36	2.58	7.74	2.62	8.12	2.66
							10	9.00	1.59	9.35	1.62	9.71	1.65	9.89	1.67	10.07	1.69	10.44	1.72	10.81	1.75
							12	8.84	1.63	9.19	1.66	9.55	1.70	9.73	1.71	9.92	1.73	10.29	1.76	10.66	1.80
							14	8.68	1.67	9.04	1.71	9.40	1.74	9.58	1.76	9.76	1.77	10.13	1.81	10.51	1.84
							16	8.53	1.72	8.88	1.75	9.24	1.78	9.43	1.80	9.61	1.82	9.98	1.85	10.36	1.89
							18	8.37	1.76	8.73	1.79	9.09	1.83	9.27	1.85	9.46	1.86	9.83	1.90	10.21	1.93
							20	8.22	1.81	8.57	1.84	8.94	1.88	9.12	1.89	9.30	1.91	9.68	1.95	10.05	1.98
							21	8.14	1.83	8.50	1.86	8.86	1.90	9.04	1.92	9.23	1.93	9.60	1.97	9.98	2.00
							23	7.99	1.88	8.34	1.91	8.71	1.95	8.89	1.96	9.08	1.98	9.45	2.02	9.83	2.05
							25	7.83	1.92	8.19	1.96	8.56	1.99	8.74	2.01	8.92	2.03	9.30	2.07	9.68	2.10
3500	3500	3500			10500	131%	27	7.68	1.97	8.04	2.01	8.40	2.04	8.59	2.06	8.77	2.08	9.15	2.11	9.53	2.15
							29	7.53	2.02	7.89	2.06	8.25	2.09	8.44	2.11	8.62	2.13	9.00	2.16	9.38	2.20
							31	7.37	2.07	7.74	2.11	8.10	2.14	8.29	2.16	8.47	2.18	8.85	2.22	9.23	2.25
							33	7.22	2.12	7.58	2.16	7.95	2.19	8.14	2.21	8.32	2.23	8.70	2.27	9.08	2.30
							35	7.07	2.17	7.43	2.21	7.80	2.25	8.00	2.26	8.17	2.28	8.55	2.32	8.93	2.36
							37	6.92	2.23	7.28	2.26	7.65	2.30	7.84	2.32	8.02	2.34	8.40	2.37	8.79	2.41
							39	6.77	2.28	7.13	2.32	7.50	2.35	7.69	2.37	7.87	2.39	8.25	2.43	8.64	2.46
							42	6.54	2.36	6.91	2.40	7.28	2.43	7.46	2.45	7.65	2.47	8.03	2.51	8.42	2.55
							44	6.39	2.42	6.76	2.45	7.13	2.49	7.32	2.51	7.50	2.53	7.88	2.57	8.27	2.60
							46	6.24	2.47	6.61	2.51	6.98	2.55	7.17	2.57	7.36	2.58	7.74	2.62	8.12	2.66
							10	9.00	1.61	9.35	1.65	9.71	1.68	9.89	1.70	10.07	1.72	10.44	1.75	10.81	1.79
							12	8.84	1.66	9.19	1.69	9.55	1.73	9.73	1.74	9.92	1.76	10.29	1.80	10.66	1.83
							14	8.68	1.70	9.04	1.74	9.40	1.77	9.58	1.79	9.76	1.81	10.13	1.84	10.51	1.88
							16	8.53	1.75	8.88	1.78	9.24	1.82	9.43	1.83	9.61	1.85	9.98	1.89	10.36	1.92
							18	8.37	1.79	8.73	1.83	9.09	1.86	9.27	1.88	9.46	1.90	9.83	1.93	10.21	1.97
							20	8.22	1.84	8.57	1.87	8.94	1.91	9.12	1.93	9.30	1.94	9.68	1.98	10.05	2.02
							21	8.14	1.86	8.50	1.90	8.86	1.93	9.04	1.95	9.23	1.97	9.60	2.00	9.98	2.04
							23	7.99	1.91	8.34	1.94	8.71	1.98	8.89	2.00	9.08	2.02	9.45	2.05	9.83	2.09
							25	7.83	1.96	8.19	1.99	8.56	2.03	8.74	2.05	8.92	2.07	9.30	2.10	9.68	2.14
3500	3500	5000			12000	150%	27	7.68	2.01	8.04	2.04	8.40	2.08	8.59	2.10	8.77	2.12	9.15	2.15	9.53	2.19
							29	7.53	2.06	7.89	2.09	8.25	2.13	8.44	2.15	8.62	2.17	9.00	2.20	9.38	2.24
							31	7.37	2.11	7.74	2.14	8.10	2.18	8.29	2.20	8.47	2.22	8.85	2.25	9.23	2.29
							33	7.22	2.16	7.58	2.20	7.95	2.23	8.14	2.25	8.32	2.27	8.70	2.31	9.08	2.34
							35	7.07	2.21	7.43	2.25	7.80	2.29	8.00	2.30	8.17	2.32	8.55	2.36	8.93	2.40
							37	6.92	2.27	7.28	2.30	7.65	2.34	7.84	2.36	8.02	2.38	8.40	2.42	8.79	2.45
							39	6.77	2.32	7.13	2.36	7.50	2.39	7.69	2.41	7.87	2.43	8.25	2.47	8.64	2.51
							42	6.54	2.40	6.91	2.44	7.28	2.48	7.46	2.50	7.65	2.52	8.03	2.55	8.42	2.59
							44	6.39	2.46	6.76	2.50	7.13	2.53	7.32	2.55	7.50	2.57	7.88	2.61	8.27	2.65
							46	6.24	2.51	6.61	2.55	6.98	2.59	7.17	2.61	7.36	2.63	7.74	2.67	8.12	2.71
							10	8.50	1.50	8.83	1.53	9.17	1.57	9.34	1.58	9.52	1.60	9.87	1.63	10.22	1.66
							12	8.35	1.54	8.69	1.57	9.03	1.61	9.20	1.62	9.37	1.64	9.72	1.67	10.08	1.70
							14	8.21	1.58	8.54	1.62	8.88	1.65	9.05	1.66	9.23	1.68	9.58	1.71	9.93	1.74
							16	8.06	1.62	8.39	1.66	8.74	1.69	8.91	1.71	9.08	1.72	9.43	1.76	9.79	1.79
							18	7.91	1.67	8.25	1.70	8.59	1.73	8.76	1.75	8.94	1.77	9.29	1.80	9.64	1.83
							20	7.77	1.71	8.10	1.74	8.45	1.78	8.62	1.79	8.79	1.81	9.14	1.84	9.50	1.88
							21	7.69	1.73	8.03	1.77	8.37	1.80	8.55	1.81	8.72	1.83	9.07	1.86	9.43	1.90
							23	7.55	1.78	7.89	1.81	8.23	1.84	8.40	1.86	8.58	1.88	8.93	1.91	9.29	1.94
							25	7.40	1.82	7.74	1.85	8.08	1.89	8.26	1.91	8.43	1.92	8.79	1.96	9.15	1.99
2000	2000	2000	2000		8000	100%	27	7.26	1.87	7.60	1.90	7.94	1.93	8.12	1.95	8.29	1.97	8.65	2.00	9.00	2.04
							29	7.11	1.91	7.45	1.95	7.80	1.98	7.97	2.00	8.15	2.02	8.50	2.05	8.86	2.08
							31	6.97	1.96	7.31	2.00	7.66	2.03	7.83	2.05	8.01	2.06	8.36	2.10	8.72	2.13
							33	6.83	2.01	7.17	2.04	7.51	2.08	7.69	2.10	7.86	2.11	8.22	2.15	8.58	2.18
							35	6.68	2.06	7.02	2.09	7.37	2.13	7.56	2.14	7.72	2.16	8.08	2.20	8.44	2.23
							37	6.54	2.11	6.88	2.14	7.23	2.18	7.40	2.19	7.58	2.21	7.94	2.25	8.30	2.28
							39	6.40	2.16	6.74	2.19	7.09	2.23	7.26	2.25	7.44	2.26	7.80	2.30	8.16	2.33
							42	6.18	2.23	6.53	2.27	6.88	2.31	7.05	2.32	7.23	2.34	7.59	2.38	7.95	2.41
							44	6.04	2.29	6.39	2.32	6.74	2.36	6.91	2.38	7.09	2.39	7.45	2.43	7.82	2.46
							46	5.90	2.34	6.25	2.38	6.60	2.41	6.77	2.43	6.95	2.45	7.31	2.48	7.68	2.52

* All figures comply with EN14511

1. Cooling capacity is based on 27°CDB / 19°CWB (indoor temperature), 35°CDB (outdoor temperature).
2. Heating capacity is based on 20°CDB (indoor temperature), 7°CDB/6°CWB (outdoor temperature).
3. Capacities are based on the following conditions : - Corresponding refrigerant piping length : 5m / - Level difference : 0m
4. The total ability of connected a indoor unit is up to 12kW
5. It is impossible to connect the indoor unit for one room only.
6. This data is reference data for temperature capacity trend.

1) Cooling

COOLING

Combination (Capacity Index)					Combination (Total)	Combination (%)	Outdoor Temperature (°C, DB)	Indoor Temperature(°C, WB)													
								14		16		18		19		20		22		24	
								TC(kW)	PI(kW)	TC(kW)	PI(kW)	TC(kW)	PI(kW)	TC(kW)	PI(kW)	TC(kW)	PI(kW)	TC(kW)	PI(kW)	TC(kW)	PI(kW)
2000	2000	2000	2500		8500	106%	10	8.55	1.50	8.88	1.53	9.22	1.57	9.39	1.58	9.57	1.60	9.92	1.63	10.27	1.66
							12	8.40	1.54	8.73	1.57	9.07	1.61	9.25	1.62	9.42	1.64	9.77	1.67	10.13	1.70
							14	8.25	1.58	8.59	1.62	8.93	1.65	9.10	1.66	9.27	1.68	9.63	1.71	9.98	1.74
							16	8.10	1.62	8.44	1.66	8.78	1.69	8.95	1.71	9.13	1.72	9.48	1.76	9.84	1.79
							18	7.95	1.67	8.29	1.70	8.64	1.73	8.81	1.75	8.98	1.77	9.34	1.80	9.70	1.83
							20	7.81	1.71	8.15	1.74	8.49	1.78	8.66	1.79	8.84	1.81	9.19	1.84	9.55	1.88
							21	7.73	1.73	8.07	1.77	8.42	1.80	8.59	1.81	8.77	1.83	9.12	1.86	9.48	1.90
							23	7.59	1.78	7.93	1.81	8.27	1.84	8.45	1.86	8.62	1.88	8.98	1.91	9.34	1.94
							25	7.44	1.82	7.78	1.85	8.13	1.89	8.30	1.91	8.48	1.92	8.83	1.96	9.19	1.99
							27	7.30	1.87	7.64	1.90	7.98	1.93	8.16	1.95	8.33	1.97	8.69	2.00	9.05	2.04
							29	7.15	1.91	7.49	1.95	7.84	1.98	8.01	2.00	8.19	2.02	8.55	2.05	8.91	2.08
							31	7.01	1.96	7.35	2.00	7.70	2.03	7.87	2.05	8.05	2.06	8.41	2.10	8.77	2.13
							33	6.86	2.01	7.20	2.04	7.55	2.08	7.73	2.10	7.91	2.11	8.26	2.15	8.63	2.18
							35	6.72	2.06	7.06	2.09	7.41	2.13	7.60	2.14	7.76	2.16	8.12	2.20	8.49	2.23
							37	6.57	2.11	6.92	2.14	7.27	2.18	7.44	2.19	7.62	2.21	7.98	2.25	8.35	2.28
							39	6.43	2.16	6.78	2.19	7.13	2.23	7.30	2.25	7.48	2.26	7.84	2.30	8.21	2.33
							42	6.22	2.23	6.56	2.27	6.91	2.31	7.09	2.32	7.27	2.34	7.63	2.38	8.00	2.41
							44	6.07	2.29	6.42	2.32	6.77	2.36	6.95	2.38	7.13	2.39	7.49	2.43	7.86	2.46
							46	5.93	2.34	6.28	2.38	6.63	2.41	6.81	2.43	6.99	2.45	7.35	2.48	7.72	2.52
2000	2000	2000	3500		9500	119%	10	8.64	1.53	8.97	1.56	9.32	1.59	9.49	1.61	9.67	1.63	10.02	1.66	10.38	1.69
							12	8.49	1.57	8.83	1.60	9.17	1.64	9.34	1.65	9.52	1.67	9.88	1.70	10.24	1.73
							14	8.34	1.61	8.68	1.65	9.02	1.68	9.20	1.69	9.37	1.71	9.73	1.74	10.09	1.78
							16	8.19	1.65	8.53	1.69	8.87	1.72	9.05	1.74	9.23	1.75	9.58	1.79	9.94	1.82
							18	8.04	1.70	8.38	1.73	8.73	1.76	8.90	1.78	9.08	1.80	9.44	1.83	9.80	1.87
							20	7.89	1.74	8.23	1.78	8.58	1.81	8.76	1.83	8.93	1.84	9.29	1.88	9.65	1.91
							21	7.82	1.76	8.16	1.80	8.51	1.83	8.68	1.85	8.86	1.87	9.22	1.90	9.58	1.93
							23	7.67	1.81	8.01	1.84	8.36	1.88	8.54	1.89	8.71	1.91	9.07	1.95	9.44	1.98
							25	7.52	1.86	7.86	1.89	8.21	1.92	8.39	1.94	8.57	1.96	8.93	1.99	9.29	2.03
							27	7.37	1.90	7.72	1.94	8.07	1.97	8.24	1.99	8.42	2.01	8.78	2.04	9.15	2.07
							29	7.23	1.95	7.57	1.98	7.92	2.02	8.10	2.04	8.28	2.05	8.64	2.09	9.00	2.12
							31	7.08	2.00	7.43	2.03	7.78	2.07	7.95	2.08	8.13	2.10	8.49	2.14	8.86	2.17
							33	6.93	2.05	7.28	2.08	7.63	2.12	7.81	2.13	7.99	2.15	8.35	2.19	8.72	2.22
							35	6.79	2.10	7.14	2.13	7.49	2.17	7.68	2.18	7.85	2.20	8.21	2.24	8.58	2.27
							37	6.64	2.15	6.99	2.18	7.34	2.22	7.52	2.24	7.70	2.25	8.07	2.29	8.43	2.32
							39	6.50	2.20	6.85	2.23	7.20	2.27	7.38	2.29	7.56	2.31	7.92	2.34	8.29	2.38
							42	6.28	2.28	6.63	2.31	6.99	2.35	7.17	2.37	7.35	2.38	7.71	2.42	8.08	2.46
							44	6.14	2.33	6.49	2.37	6.84	2.40	7.02	2.42	7.20	2.44	7.57	2.47	7.94	2.51
							46	5.99	2.38	6.35	2.42	6.70	2.46	6.88	2.47	7.06	2.49	7.43	2.53	7.80	2.57
2000	2000	2000	5000		11000	138%	10	9.00	1.61	9.35	1.65	9.71	1.68	9.89	1.70	10.07	1.72	10.44	1.75	10.81	1.79
							12	8.84	1.66	9.19	1.69	9.55	1.73	9.73	1.74	9.92	1.76	10.29	1.80	10.66	1.83
							14	8.68	1.70	9.04	1.74	9.40	1.77	9.58	1.79	9.76	1.81	10.13	1.84	10.51	1.88
							16	8.53	1.75	8.88	1.78	9.24	1.82	9.43	1.83	9.61	1.85	9.98	1.89	10.36	1.92
							18	8.37	1.79	8.73	1.83	9.09	1.86	9.27	1.88	9.46	1.90	9.83	1.93	10.21	1.97
							20	8.22	1.84	8.57	1.87	8.94	1.91	9.12	1.93	9.30	1.94	9.68	1.98	10.05	2.02
							21	8.14	1.86	8.50	1.90	8.86	1.93	9.04	1.95	9.23	1.97	9.60	2.00	9.98	2.04
							23	7.99	1.91	8.34	1.94	8.71	1.98	8.89	2.00	9.08	2.02	9.45	2.05	9.83	2.09
							25	7.83	1.96	8.19	1.99	8.56	2.03	8.74	2.05	8.92	2.07	9.30	2.10	9.68	2.14
							27	7.68	2.01	8.04	2.04	8.40	2.08	8.59	2.10	8.77	2.12	9.15	2.15	9.53	2.19
							29	7.53	2.06	7.89	2.09	8.25	2.13	8.44	2.15	8.62	2.17	9.00	2.20	9.38	2.24
							31	7.37	2.11	7.74	2.14	8.10	2.18	8.29	2.20	8.47	2.22	8.85	2.25	9.23	2.29
							33	7.22	2.16	7.58	2.20	7.95	2.23	8.14	2.25	8.32	2.27	8.70	2.31	9.08	2.34
							35	7.07	2.21	7.43	2.25	7.80	2.29	8.00	2.30	8.17	2.32	8.55	2.36	8.93	2.40
							37	6.92	2.27	7.28	2.30	7.65	2.34	7.84	2.36	8.02	2.38	8.40	2.42	8.79	2.45
							39	6.77	2.32	7.13	2.36	7.50	2.39	7.69	2.41	7.87	2.43	8.25	2.47	8.64	2.51
							42	6.54	2.40	6.91	2.44	7.28	2.48	7.46	2.50	7.65	2.52	8.03	2.55	8.42	2.59
							44	6.39	2.46	6.76	2.50	7.13	2.53	7.32	2.55	7.50	2.57	7.88	2.61	8.27	2.65
							46	6.24	2.51	6.61	2.55	6.98	2.59	7.17	2.61	7.36	2.63	7.74	2.67	8.12	2.71
2000	2000	2500	2500		9000	113%	10	8.61	1.54	8.95	1.57	9.29	1.60	9.47	1.62	9.64	1.63	10.00	1.67	10.36	1.70
							12	8.46	1.58	8.80	1.61	9.15	1.64	9.32	1.66	9.50	1.68	9.85	1.71	10.21	1.74
							14	8.31	1.62	8.65	1.65	9.00	1.69	9.17	1.70	9.35	1.72	9.70	1.75	10.06	1.79
							16	8.17	1.66	8.51	1.70	8.85	1.73	9.03	1.75	9.20	1.76	9.56	1.80	9.92	1.83
							18	8.02	1.71	8.36	1.74	8.70	1.77	8.88	1.79	9.05	1.81	9.41	1.84	9.77	1.87
							20	7.87	1.75	8.21	1.78	8.56	1.82	8.73	1.83	8.91	1.85	9.27	1.89	9.63	1.92
							21	7.80	1.77	8.14	1.81	8.48	1.84	8.66	1.86	8.84	1.87	9.19	1.91	9.56	1.94
							23	7.65	1.82	7.99	1.85	8.34	1.89	8.51	1.90	8.69	1.92	9.05	1.95	9.41	1.99
							25	7.50	1.86	7.84	1.90	8.19	1.93	8.37	1.95	8.55	1.97	8.90	2.00	9.27	2.04
							27	7.35	1.91	7.70	1.95	8.05	1.98	8.22	2.00	8.40	2.01	8.76	2.05	9.12	2.08
							29	7.21	1.96	7.55	1.99	7.90	2.03	8.08	2.05	8.26	2.06	8.62	2.10	8.98	2.13
							31	7.06	2.01	7.41	2.04	7.76	2.08	7.93	2.09	8.11	2.11	8.47	2.15	8.84	2.18
							33	6.92	2.06	7.26	2.09	7.61	2.13	7.79	2.14	7.97	2.16	8.33	2.20	8.70	2.23
							35	6.77	2.11	7.12	2.14	7.47	2.18	7.66	2.19	7.83	2.21	8.19	2.25	8.55	2.28
							37	6.63	2.16	6.97	2.19	7.32	2.23	7.50	2.25	7.68	2.26	8.04	2.30	8.41	2.34
							39	6.48	2.21	6.83	2.24	7.18	2.28	7.36	2.30	7.54	2.32	7.90	2.35	8.27	2.39
							42	6.27	2.29	6.61	2.32	6.97	2.36	7.15	2.38	7.33	2.40	7.69	2.43	8.06	2.47
							44	6.12	2.34	6.47	2.38	6.83	2.41	7.00	2.43	7.19	2.45	7.55	2.49	7.92	2.52
							46	5.98	2.39	6.33	2.43	6.68	2.47	6.86	2.49	7.04	2.50	7.41	2.54	7.78	2.58

* All figures comply with EN14511

1. Cooling capacity is based on 27°CDB / 19°CWB (indoor temperature), 35°CDB (outdoor temperature).
2. Heating capacity is based on 20°CDB (indoor temperature), 7°CDB/6°CWB (outdoor temperature).
3. Capacities are based on the following conditions : - Corresponding refrigerant piping length : 5m / - Level difference : 0m
4. The total ability of connected a indoor unit is up to 12kW
5. It is impossible to connect the indoor unit for one room only.
6. This data is reference data for temperature capacity trend.

6 AJ080FCJ4EH

1) Cooling

COOLING

Combination (Capacity Index)					Combination (Total)	Combination (%)	Outdoor Temperature (°C, DB)	Indoor Temperature(°C, WB)													
								14		16		18		19		20		22		24	
								TC(kW)	PI(kW)	TC(kW)	PI(kW)	TC(kW)	PI(kW)	TC(kW)	PI(kW)	TC(kW)	PI(kW)	TC(kW)	PI(kW)	TC(kW)	PI(kW)
2000	2000	2500	3500		10000	125%	10	8.69	1.54	9.03	1.58	9.38	1.61	9.55	1.63	9.73	1.64	10.09	1.68	10.45	1.71
							12	8.54	1.58	8.88	1.62	9.23	1.65	9.41	1.67	9.58	1.68	9.94	1.72	10.30	1.75
							14	8.39	1.63	8.73	1.66	9.08	1.69	9.26	1.71	9.43	1.73	9.79	1.76	10.15	1.79
							16	8.24	1.67	8.58	1.70	8.93	1.74	9.11	1.75	9.29	1.77	9.64	1.80	10.01	1.84
							18	8.09	1.71	8.43	1.75	8.78	1.78	8.96	1.80	9.14	1.81	9.50	1.85	9.86	1.88
							20	7.94	1.76	8.29	1.79	8.64	1.83	8.81	1.84	8.99	1.86	9.35	1.89	9.72	1.93
							21	7.87	1.78	8.21	1.81	8.56	1.85	8.74	1.87	8.92	1.88	9.28	1.92	9.64	1.95
							23	7.72	1.83	8.06	1.86	8.41	1.89	8.59	1.91	8.77	1.93	9.13	1.96	9.50	2.00
							25	7.57	1.87	7.92	1.91	8.27	1.94	8.44	1.96	8.62	1.98	8.99	2.01	9.35	2.05
							27	7.42	1.92	7.77	1.95	8.12	1.99	8.30	2.01	8.48	2.02	8.84	2.06	9.21	2.09
							29	7.27	1.97	7.62	2.00	7.97	2.04	8.15	2.05	8.33	2.07	8.69	2.11	9.06	2.14
							31	7.13	2.02	7.47	2.05	7.83	2.09	8.01	2.10	8.19	2.12	8.55	2.16	8.92	2.19
							33	6.98	2.07	7.33	2.10	7.68	2.14	7.86	2.15	8.04	2.17	8.41	2.21	8.78	2.24
							35	6.83	2.12	7.18	2.15	7.54	2.19	7.73	2.20	7.90	2.22	8.26	2.26	8.63	2.29
							37	6.69	2.17	7.04	2.20	7.39	2.24	7.57	2.26	7.75	2.27	8.12	2.31	8.49	2.35
							39	6.54	2.22	6.89	2.25	7.25	2.29	7.43	2.31	7.61	2.33	7.97	2.36	8.35	2.40
							42	6.32	2.30	6.67	2.33	7.03	2.37	7.21	2.39	7.39	2.41	7.76	2.44	8.13	2.48
							44	6.18	2.35	6.53	2.39	6.89	2.42	7.07	2.44	7.25	2.46	7.62	2.50	7.99	2.53
							46	6.03	2.41	6.39	2.44	6.74	2.48	6.93	2.50	7.11	2.52	7.48	2.55	7.85	2.59
2000	2000	2500	5000		11500	144%	10	9.00	1.61	9.35	1.65	9.71	1.68	9.89	1.70	10.07	1.72	10.44	1.75	10.81	1.79
							12	8.84	1.66	9.19	1.69	9.55	1.73	9.73	1.74	9.92	1.76	10.29	1.80	10.66	1.83
							14	8.68	1.70	9.04	1.74	9.40	1.77	9.58	1.79	9.76	1.81	10.13	1.84	10.51	1.88
							16	8.53	1.75	8.88	1.78	9.24	1.82	9.43	1.83	9.61	1.85	9.98	1.89	10.36	1.92
							18	8.37	1.79	8.73	1.83	9.09	1.86	9.27	1.88	9.46	1.90	9.83	1.93	10.21	1.97
							20	8.22	1.84	8.57	1.87	8.94	1.91	9.12	1.93	9.30	1.94	9.68	1.98	10.05	2.02
							21	8.14	1.86	8.50	1.90	8.86	1.93	9.04	1.95	9.23	1.97	9.60	2.00	9.98	2.04
							23	7.99	1.91	8.34	1.94	8.71	1.98	8.89	2.00	9.08	2.02	9.45	2.05	9.83	2.09
							25	7.83	1.96	8.19	1.99	8.56	2.03	8.74	2.05	8.92	2.07	9.30	2.10	9.68	2.14
							27	7.68	2.01	8.04	2.04	8.40	2.08	8.59	2.10	8.77	2.12	9.15	2.15	9.53	2.19
							29	7.53	2.06	7.89	2.09	8.25	2.13	8.44	2.15	8.62	2.17	9.00	2.20	9.38	2.24
							31	7.37	2.11	7.74	2.14	8.10	2.18	8.29	2.20	8.47	2.22	8.85	2.25	9.23	2.29
							33	7.22	2.16	7.58	2.20	7.95	2.23	8.14	2.25	8.32	2.27	8.70	2.31	9.08	2.34
							35	7.07	2.21	7.43	2.25	7.80	2.29	8.00	2.30	8.17	2.32	8.55	2.36	8.93	2.40
							37	6.92	2.27	7.28	2.30	7.65	2.34	7.84	2.36	8.02	2.38	8.40	2.42	8.79	2.45
							39	6.77	2.32	7.13	2.36	7.50	2.39	7.69	2.41	7.87	2.43	8.25	2.47	8.64	2.51
							42	6.54	2.40	6.91	2.44	7.28	2.48	7.46	2.50	7.65	2.52	8.03	2.55	8.42	2.59
							44	6.39	2.46	6.76	2.50	7.13	2.53	7.32	2.55	7.50	2.57	7.88	2.61	8.27	2.65
							46	6.24	2.51	6.61	2.55	6.98	2.59	7.17	2.61	7.36	2.63	7.74	2.67	8.12	2.71
2000	2000	3500	3500		11000	138%	10	9.00	1.60	9.35	1.63	9.71	1.67	9.89	1.68	10.07	1.70	10.44	1.74	10.81	1.77
							12	8.84	1.64	9.19	1.68	9.55	1.71	9.73	1.73	9.92	1.75	10.29	1.78	10.66	1.81
							14	8.68	1.69	9.04	1.72	9.40	1.76	9.58	1.77	9.76	1.79	10.13	1.82	10.51	1.86
							16	8.53	1.73	8.88	1.77	9.24	1.80	9.43	1.82	9.61	1.84	9.98	1.87	10.36	1.90
							18	8.37	1.78	8.73	1.81	9.09	1.85	9.27	1.86	9.46	1.88	9.83	1.92	10.21	1.95
							20	8.22	1.82	8.57	1.86	8.94	1.89	9.12	1.91	9.30	1.93	9.68	1.96	10.05	2.00
							21	8.14	1.85	8.50	1.88	8.86	1.92	9.04	1.93	9.23	1.95	9.60	1.99	9.98	2.02
							23	7.99	1.89	8.34	1.93	8.71	1.96	8.89	1.98	9.08	2.00	9.45	2.03	9.83	2.07
							25	7.83	1.94	8.19	1.98	8.56	2.01	8.74	2.03	8.92	2.05	9.30	2.08	9.68	2.12
							27	7.68	1.99	8.04	2.03	8.40	2.06	8.59	2.08	8.77	2.10	9.15	2.13	9.53	2.17
							29	7.53	2.04	7.89	2.08	8.25	2.11	8.44	2.13	8.62	2.15	9.00	2.18	9.38	2.22
							31	7.37	2.09	7.74	2.13	8.10	2.16	8.29	2.18	8.47	2.20	8.85	2.24	9.23	2.27
							33	7.22	2.14	7.58	2.18	7.95	2.21	8.14	2.23	8.32	2.25	8.70	2.29	9.08	2.32
							35	7.07	2.19	7.43	2.23	7.80	2.27	8.00	2.28	8.17	2.30	8.55	2.34	8.93	2.38
							37	6.92	2.25	7.28	2.28	7.65	2.32	7.84	2.34	8.02	2.36	8.40	2.39	8.79	2.43
							39	6.77	2.30	7.13	2.34	7.50	2.37	7.69	2.39	7.87	2.41	8.25	2.45	8.64	2.49
							42	6.54	2.38	6.91	2.42	7.28	2.46	7.46	2.48	7.65	2.49	8.03	2.53	8.42	2.57
							44	6.39	2.44	6.76	2.47	7.13	2.51	7.32	2.53	7.50	2.55	7.88	2.59	8.27	2.63
							46	6.24	2.49	6.61	2.53	6.98	2.57	7.17	2.59	7.36	2.61	7.74	2.65	8.12	2.68
2000	2500	2500	2500		9500	119%	10	8.67	1.54	9.01	1.57	9.36	1.60	9.53	1.62	9.71	1.63	10.06	1.67	10.42	1.70
							12	8.52	1.58	8.86	1.61	9.21	1.64	9.38	1.66	9.56	1.68	9.91	1.71	10.28	1.74
							14	8.37	1.62	8.71	1.65	9.06	1.69	9.23	1.70	9.41	1.72	9.77	1.75	10.13	1.79
							16	8.22	1.66	8.56	1.70	8.91	1.73	9.08	1.75	9.26	1.76	9.62	1.80	9.98	1.83
							18	8.07	1.71	8.41	1.74	8.76	1.77	8.94	1.79	9.11	1.81	9.47	1.84	9.84	1.87
							20	7.92	1.75	8.26	1.78	8.61	1.82	8.79	1.83	8.97	1.85	9.33	1.89	9.69	1.92
							21	7.85	1.77	8.19	1.81	8.54	1.84	8.72	1.86	8.89	1.87	9.25	1.91	9.62	1.94
							23	7.70	1.82	8.04	1.85	8.39	1.89	8.57	1.90	8.75	1.92	9.11	1.95	9.47	1.99
							25	7.55	1.86	7.89	1.90	8.25	1.93	8.42	1.95	8.60	1.97	8.96	2.00	9.33	2.04
							27	7.40	1.91	7.75	1.95	8.10	1.98	8.28	2.00	8.46	2.01	8.82	2.05	9.18	2.08
							29	7.25	1.96	7.60	1.99	7.95	2.03	8.13	2.05	8.31	2.06	8.67	2.10	9.04	2.13
							31	7.11	2.01	7.45	2.04	7.81	2.08	7.99	2.09	8.16	2.11	8.53	2.15	8.90	2.18
							33	6.96	2.06	7.31	2.09	7.66	2.13	7.84	2.14	8.02	2.16	8.38	2.20	8.75	2.23
							35	6.81	2.11	7.16	2.14	7.52	2.18	7.71	2.19	7.88	2.21	8.24	2.25	8.61	2.28
							37	6.67	2.16	7.02	2.19	7.37	2.23	7.55	2.25	7.73	2.26	8.10	2.30	8.47	2.34
							39	6.52	2.21	6.87	2.24	7.23	2.28	7.41	2.30	7.59	2.32	7.95	2.35	8.32	2.39
							42	6.31	2.29	6.66	2.32	7.01	2.36	7.19	2.38	7.37	2.40	7.74	2.43	8.11	2.47
							44	6.16	2.34	6.51	2.38	6.87	2.41	7.05	2.43	7.23	2.45	7.60	2.49	7.97	2.52
							46	6.02	2.39	6.37	2.43	6.73	2.47	6.91	2.49	7.09	2.50	7.46	2.54	7.83	2.58

* All figures comply with EN14511

1. Cooling capacity is based on 27°CDB / 19°CWB (indoor temperature), 35°CDB (outdoor temperature).
2. Heating capacity is based on 20°CDB (indoor temperature), 7°CDB/6°CWB (outdoor temperature).
3. Capacities are based on the following conditions : - Corresponding refrigerant piping length : 5m / - Level difference : 0m
4. The total ability of connected a indoor unit is up to 12kW
5. It is impossible to connect the indoor unit for one room only.
6. This data is reference data for temperature capacity trend.

1) Cooling

	Combination (Capacity Index)					Combination (Total)	Combination (%)	Outdoor Temperature (°C, DB)	Indoor Temperature(°C, WB)															
									14		16		18		19		20		22		24			
									TC(kW)	PI(kW)	TC(kW)	PI(kW)	TC(kW)	PI(kW)	TC(kW)	PI(kW)	TC(kW)	PI(kW)	TC(kW)	PI(kW)	TC(kW)	PI(kW)	TC(kW)	PI(kW)
COOLING	2000	2500	2500	3500		10500	131%	10	9.00	1.59	9.35	1.62	9.71	1.65	9.89	1.67	10.07	1.69	10.44	1.72	10.81	1.75
								12	8.84	1.63	9.19	1.66	9.55	1.70	9.73	1.71	9.92	1.73	10.29	1.76	10.66	1.80
								14	8.68	1.67	9.04	1.71	9.40	1.74	9.58	1.76	9.76	1.77	10.13	1.81	10.51	1.84
								16	8.53	1.72	8.88	1.75	9.24	1.78	9.43	1.80	9.61	1.82	9.98	1.85	10.36	1.89
								18	8.37	1.76	8.73	1.79	9.09	1.83	9.27	1.85	9.46	1.86	9.83	1.90	10.21	1.93
								20	8.22	1.81	8.57	1.84	8.94	1.88	9.12	1.89	9.30	1.91	9.68	1.95	10.05	1.98
								21	8.14	1.83	8.50	1.86	8.86	1.90	9.04	1.92	9.23	1.93	9.60	1.97	9.98	2.00
								23	7.99	1.88	8.34	1.91	8.71	1.95	8.89	1.96	9.08	1.98	9.45	2.02	9.83	2.05
								25	7.83	1.92	8.19	1.96	8.56	1.99	8.74	2.01	8.92	2.03	9.30	2.07	9.68	2.10
								27	7.68	1.97	8.04	2.01	8.40	2.04	8.59	2.06	8.77	2.08	9.15	2.11	9.53	2.15
								29	7.53	2.02	7.89	2.06	8.25	2.09	8.44	2.11	8.62	2.13	9.00	2.16	9.38	2.20
								31	7.37	2.07	7.74	2.11	8.10	2.14	8.29	2.16	8.47	2.18	8.85	2.22	9.23	2.25
								33	7.22	2.12	7.58	2.16	7.95	2.19	8.14	2.21	8.32	2.23	8.70	2.27	9.08	2.30
								35	7.07	2.17	7.43	2.21	7.80	2.25	8.00	2.26	8.17	2.28	8.55	2.32	8.93	2.36
								37	6.92	2.23	7.28	2.26	7.65	2.30	7.84	2.32	8.02	2.34	8.40	2.37	8.79	2.41
								39	6.77	2.28	7.13	2.32	7.50	2.35	7.69	2.37	7.87	2.39	8.25	2.43	8.64	2.46
								42	6.54	2.36	6.91	2.40	7.28	2.43	7.46	2.45	7.65	2.47	8.03	2.51	8.42	2.55
								44	6.39	2.42	6.76	2.45	7.13	2.49	7.32	2.51	7.50	2.53	7.88	2.57	8.27	2.60
								46	6.24	2.47	6.61	2.51	6.98	2.55	7.17	2.57	7.36	2.58	7.74	2.62	8.12	2.66
	2000	2500	2500	5000		12000	150%	10	9.00	1.61	9.35	1.65	9.71	1.68	9.89	1.70	10.07	1.72	10.44	1.75	10.81	1.79
								12	8.84	1.66	9.19	1.69	9.55	1.73	9.73	1.74	9.92	1.76	10.29	1.80	10.66	1.83
								14	8.68	1.70	9.04	1.74	9.40	1.77	9.58	1.79	9.76	1.81	10.13	1.84	10.51	1.88
								16	8.53	1.75	8.88	1.78	9.24	1.82	9.43	1.83	9.61	1.85	9.98	1.89	10.36	1.92
								18	8.37	1.79	8.73	1.83	9.09	1.86	9.27	1.88	9.46	1.90	9.83	1.93	10.21	1.97
								20	8.22	1.84	8.57	1.87	8.94	1.91	9.12	1.93	9.30	1.94	9.68	1.98	10.05	2.02
								21	8.14	1.86	8.50	1.90	8.86	1.93	9.04	1.95	9.23	1.97	9.60	2.00	9.98	2.04
								23	7.99	1.91	8.34	1.94	8.71	1.98	8.89	2.00	9.08	2.02	9.45	2.05	9.83	2.09
								25	7.83	1.96	8.19	1.99	8.56	2.03	8.74	2.05	8.92	2.07	9.30	2.10	9.68	2.14
								27	7.68	2.01	8.04	2.04	8.40	2.08	8.59	2.10	8.77	2.12	9.15	2.15	9.53	2.19
								29	7.53	2.06	7.89	2.09	8.25	2.13	8.44	2.15	8.62	2.17	9.00	2.20	9.38	2.24
								31	7.37	2.11	7.74	2.14	8.10	2.18	8.29	2.20	8.47	2.22	8.85	2.25	9.23	2.29
								33	7.22	2.16	7.58	2.20	7.95	2.23	8.14	2.25	8.32	2.27	8.70	2.31	9.08	2.34
								35	7.07	2.21	7.43	2.25	7.80	2.29	8.00	2.30	8.17	2.32	8.55	2.36	8.93	2.40
								37	6.92	2.27	7.28	2.30	7.65	2.34	7.84	2.36	8.02	2.38	8.40	2.42	8.79	2.45
								39	6.77	2.32	7.13	2.36	7.50	2.39	7.69	2.41	7.87	2.43	8.25	2.47	8.64	2.51
								42	6.54	2.40	6.91	2.44	7.28	2.48	7.46	2.50	7.65	2.52	8.03	2.55	8.42	2.59
								44	6.39	2.46	6.76	2.50	7.13	2.53	7.32	2.55	7.50	2.57	7.88	2.61	8.27	2.65
								46	6.24	2.51	6.61	2.55	6.98	2.59	7.17	2.61	7.36	2.63	7.74	2.67	8.12	2.71
	2000	2500	3500	3500		11500	144%	10	9.00	1.61	9.35	1.65	9.71	1.68	9.89	1.70	10.07	1.72	10.44	1.75	10.81	1.79
								12	8.84	1.66	9.19	1.69	9.55	1.73	9.73	1.74	9.92	1.76	10.29	1.80	10.66	1.83
								14	8.68	1.70	9.04	1.74	9.40	1.77	9.58	1.79	9.76	1.81	10.13	1.84	10.51	1.88
								16	8.53	1.75	8.88	1.78	9.24	1.82	9.43	1.83	9.61	1.85	9.98	1.89	10.36	1.92
								18	8.37	1.79	8.73	1.83	9.09	1.86	9.27	1.88	9.46	1.90	9.83	1.93	10.21	1.97
								20	8.22	1.84	8.57	1.87	8.94	1.91	9.12	1.93	9.30	1.94	9.68	1.98	10.05	2.02
								21	8.14	1.86	8.50	1.90	8.86	1.93	9.04	1.95	9.23	1.97	9.60	2.00	9.98	2.04
								23	7.99	1.91	8.34	1.94	8.71	1.98	8.89	2.00	9.08	2.02	9.45	2.05	9.83	2.09
								25	7.83	1.96	8.19	1.99	8.56	2.03	8.74	2.05	8.92	2.07	9.30	2.10	9.68	2.14
								27	7.68	2.01	8.04	2.04	8.40	2.08	8.59	2.10	8.77	2.12	9.15	2.15	9.53	2.19
								29	7.53	2.06	7.89	2.09	8.25	2.13	8.44	2.15	8.62	2.17	9.00	2.20	9.38	2.24
								31	7.37	2.11	7.74	2.14	8.10	2.18	8.29	2.20	8.47	2.22	8.85	2.25	9.23	2.29
								33	7.22	2.16	7.58	2.20	7.95	2.23	8.14	2.25	8.32	2.27	8.70	2.31	9.08	2.34
								35	7.07	2.21	7.43	2.25	7.80	2.29	8.00	2.30	8.17	2.32	8.55	2.36	8.93	2.40
								37	6.92	2.27	7.28	2.30	7.65	2.34	7.84	2.36	8.02	2.38	8.40	2.42	8.79	2.45
								39	6.77	2.32	7.13	2.36	7.50	2.39	7.69	2.41	7.87	2.43	8.25	2.47	8.64	2.51
								42	6.54	2.40	6.91	2.44	7.28	2.48	7.46	2.50	7.65	2.52	8.03	2.55	8.42	2.59
								44	6.39	2.46	6.76	2.50	7.13	2.53	7.32	2.55	7.50	2.57	7.88	2.61	8.27	2.65
								46	6.24	2.51	6.61	2.55	6.98	2.59	7.17	2.61	7.36	2.63	7.74	2.67	8.12	2.71
	2500	2500	2500	2500		10000	125%	10	8.73	1.56	9.07	1.59	9.42	1.62	9.59	1.64	9.77	1.66	10.13	1.69	10.49	1.72
								12	8.57	1.60	8.92	1.63	9.27	1.67	9.44	1.68	9.62	1.70	9.98	1.73	10.34	1.77
								14	8.42	1.64	8.77	1.68	9.12	1.71	9.29	1.73	9.47	1.74	9.83	1.78	10.19	1.81
								16	8.27	1.69	8.62	1.72	8.97	1.75	9.14	1.77	9.32	1.79	9.68	1.82	10.05	1.85
								18	8.12	1.73	8.47	1.76	8.82	1.80	8.99	1.81	9.17	1.83	9.53	1.87	9.90	1.90
								20	7.97	1.77	8.32	1.81	8.67	1.84	8.85	1.86	9.03	1.88	9.39	1.91	9.75	1.95
								21	7.90	1.80	8.24	1.83	8.59	1.87	8.77	1.88	8.95	1.90	9.31	1.93	9.68	1.97
								23	7.75	1.84	8.09	1.88	8.45	1.91	8.62	1.93	8.80	1.95	9.17	1.98	9.53	2.02
								25	7.60	1.89	7.95	1.92	8.30	1.96	8.48	1.98	8.66	1.99	9.02	2.03	9.39	2.06
								27	7.45	1.94	7.80	1.97	8.15	2.01	8.33	2.02	8.51	2.04	8.87	2.08	9.24	2.11
								29	7.30	1.99	7.65	2.02	8.00	2.06	8.18	2.07	8.36	2.09	8.73	2.13	9.10	2.16
								31	7.15	2.03	7.50	2.07	7.86	2.11	8.04	2.12	8.22	2.14	8.58	2.18	8.95	2.21
								33	7.01	2.08	7.36	2.12	7.71	2.16	7.89	2.17	8.07	2.19	8.44	2.23	8.81	2.26
								35	6.86	2.13	7.21	2.17	7.57	2.21	7.76	2.22	7.93	2.24	8.29	2.28	8.67	2.31
								37	6.71	2.19	7.06	2.22	7.42	2.26	7.60	2.28	7.78	2.29	8.15	2.33	8.52	2.37
								39	6.57	2.24	6.92	2.27	7.28	2.31	7.46	2.33	7.64	2.35	8.01	2.38	8.38	2.42
								42	6.35	2.32	6.70	2.35	7.06	2.39	7.24	2.41	7.42	2.43	7.79	2.47	8.16	2.50
								44	6.20	2.37	6.56	2.41	6.91	2.45	7.10	2.46	7.28	2.48	7.65	2.52	8.02	2.56
								46	6.06	2.43	6.41	2.46	6.77	2.50	6.95	2.52	7.14	2.54	7.51	2.58	7.88	2.61

* All figures comply with EN14511

1. Cooling capacity is based on 27°CDB / 19°CWB (indoor temperature), 35°CDB (outdoor temperature).
2. Heating capacity is based on 20°CDB (indoor temperature), 7°CDB/6°CWB (outdoor temperature).
3. Capacities are based on the following conditions : - Corresponding refrigerant piping length : 5m / - Level difference : 0m
4. The total ability of connected a indoor unit is up to 12kW
5. It is impossible to connect the indoor unit for one room only.
6. This data is reference data for temperature capacity trend.

6 AJ080FCJ4EH

1) Cooling

	Combination (Capacity Index)					Combination (Total)	Combination (%)	Outdoor Temperature (°C, DB)	Indoor Temperature(°C, WB)													
									14		16		18		19		20		22		24	
									TC(kW)	PI(kW)	TC(kW)	PI(kW)	TC(kW)	PI(kW)	TC(kW)	PI(kW)	TC(kW)	PI(kW)	TC(kW)	PI(kW)	TC(kW)	PI(kW)
COOLING	2500	2500	2500	3500		11000	138%	10	9.00	1.61	9.35	1.65	9.71	1.68	9.89	1.70	10.07	1.72	10.44	1.75	10.81	1.79
								12	8.84	1.66	9.19	1.69	9.55	1.73	9.73	1.74	9.92	1.76	10.29	1.80	10.66	1.83
								14	8.68	1.70	9.04	1.74	9.40	1.77	9.58	1.79	9.76	1.81	10.13	1.84	10.51	1.88
								16	8.53	1.75	8.88	1.78	9.24	1.82	9.43	1.83	9.61	1.85	9.98	1.89	10.36	1.92
								18	8.37	1.79	8.73	1.83	9.09	1.86	9.27	1.88	9.46	1.90	9.83	1.93	10.21	1.97
								20	8.22	1.84	8.57	1.87	8.94	1.91	9.12	1.93	9.30	1.94	9.68	1.98	10.05	2.02
								21	8.14	1.86	8.50	1.90	8.86	1.93	9.04	1.95	9.23	1.97	9.60	2.00	9.98	2.04
								23	7.99	1.91	8.34	1.94	8.71	1.98	8.89	2.00	9.08	2.02	9.45	2.05	9.83	2.09
								25	7.83	1.96	8.19	1.99	8.56	2.03	8.74	2.05	8.92	2.07	9.30	2.10	9.68	2.14
								27	7.68	2.01	8.04	2.04	8.40	2.08	8.59	2.10	8.77	2.12	9.15	2.15	9.53	2.19
								29	7.53	2.06	7.89	2.09	8.25	2.13	8.44	2.15	8.62	2.17	9.00	2.20	9.38	2.24
								31	7.37	2.11	7.74	2.14	8.10	2.18	8.29	2.20	8.47	2.22	8.85	2.25	9.23	2.29
								33	7.22	2.16	7.58	2.20	7.95	2.23	8.14	2.25	8.32	2.27	8.70	2.31	9.08	2.34
								35	7.07	2.21	7.43	2.25	7.80	2.29	8.00	2.30	8.17	2.32	8.55	2.36	8.93	2.40
								37	6.92	2.27	7.28	2.30	7.65	2.34	7.84	2.36	8.02	2.38	8.40	2.42	8.79	2.45
								39	6.77	2.32	7.13	2.36	7.50	2.39	7.69	2.41	7.87	2.43	8.25	2.47	8.64	2.51
								42	6.54	2.40	6.91	2.44	7.28	2.48	7.46	2.50	7.65	2.52	8.03	2.55	8.42	2.59
								44	6.39	2.46	6.76	2.50	7.13	2.53	7.32	2.55	7.50	2.57	7.88	2.61	8.27	2.65
								46	6.24	2.51	6.61	2.55	6.98	2.59	7.17	2.61	7.36	2.63	7.74	2.67	8.12	2.71
	2500	2500	3500	3500		12000	150%	10	9.00	1.61	9.35	1.65	9.71	1.68	9.89	1.70	10.07	1.72	10.44	1.75	10.81	1.79
								12	8.84	1.66	9.19	1.69	9.55	1.73	9.73	1.74	9.92	1.76	10.29	1.80	10.66	1.83
								14	8.68	1.70	9.04	1.74	9.40	1.77	9.58	1.79	9.76	1.81	10.13	1.84	10.51	1.88
								16	8.53	1.75	8.88	1.78	9.24	1.82	9.43	1.83	9.61	1.85	9.98	1.89	10.36	1.92
								18	8.37	1.79	8.73	1.83	9.09	1.86	9.27	1.88	9.46	1.90	9.83	1.93	10.21	1.97
								20	8.22	1.84	8.57	1.87	8.94	1.91	9.12	1.93	9.30	1.94	9.68	1.98	10.05	2.02
								21	8.14	1.86	8.50	1.90	8.86	1.93	9.04	1.95	9.23	1.97	9.60	2.00	9.98	2.04
								23	7.99	1.91	8.34	1.94	8.71	1.98	8.89	2.00	9.08	2.02	9.45	2.05	9.83	2.09
								25	7.83	1.96	8.19	1.99	8.56	2.03	8.74	2.05	8.92	2.07	9.30	2.10	9.68	2.14
								27	7.68	2.01	8.04	2.04	8.40	2.08	8.59	2.10	8.77	2.12	9.15	2.15	9.53	2.19
								29	7.53	2.06	7.89	2.09	8.25	2.13	8.44	2.15	8.62	2.17	9.00	2.20	9.38	2.24
								31	7.37	2.11	7.74	2.14	8.10	2.18	8.29	2.20	8.47	2.22	8.85	2.25	9.23	2.29
								33	7.22	2.16	7.58	2.20	7.95	2.23	8.14	2.25	8.32	2.27	8.70	2.31	9.08	2.34
								35	7.07	2.21	7.43	2.25	7.80	2.29	8.00	2.30	8.17	2.32	8.55	2.36	8.93	2.40
								37	6.92	2.27	7.28	2.30	7.65	2.34	7.84	2.36	8.02	2.38	8.40	2.42	8.79	2.45
								39	6.77	2.32	7.13	2.36	7.50	2.39	7.69	2.41	7.87	2.43	8.25	2.47	8.64	2.51
								42	6.54	2.40	6.91	2.44	7.28	2.48	7.46	2.50	7.65	2.52	8.03	2.55	8.42	2.59
								44	6.39	2.46	6.76	2.50	7.13	2.53	7.32	2.55	7.50	2.57	7.88	2.61	8.27	2.65
								46	6.24	2.51	6.61	2.55	6.98	2.59	7.17	2.61	7.36	2.63	7.74	2.67	8.12	2.71

* All figures comply with EN14511

1. Cooling capacity is based on 27°CDB / 19°CWB (indoor temperature), 35°CDB (outdoor temperature).
2. Heating capacity is based on 20°CDB (indoor temperature), 7°CDB/6°CWB (outdoor temperature).
3. Capacities are based on the following conditions : - Corresponding refrigerant piping length : 5m / - Level difference : 0m
4. The total ability of connected a indoor unit is up to 12kW
5. It is impossible to connect the indoor unit for one room only.
6. This data is reference data for temperature capacity trend.

2) Heating

HEATING

Combination (Capacity Index)					Combination (Total)	Combination (%)	Outdoor Temperature (°C, DB)	Indoor Temperature(°C, WB)													
								14		16		18		20		21		22		24	
								TC(kW)	PI(kW)	TC(kW)	PI(kW)	TC(kW)	PI(kW)	TC(kW)	PI(kW)	TC(kW)	PI(kW)	TC(kW)	PI(kW)	TC(kW)	PI(kW)
2000					2000	25%	-15	1.26	0.76	1.22	0.77	1.18	0.78	1.17	0.78	1.15	0.79	1.13	0.79	1.11	0.80
							-10	1.51	0.79	1.47	0.81	1.43	0.82	1.41	0.82	1.40	0.83	1.37	0.83	1.34	0.84
							-5	1.76	0.83	1.71	0.85	1.67	0.86	1.66	0.86	1.64	0.87	1.61	0.88	1.58	0.88
							0	2.01	0.87	1.96	0.89	1.92	0.90	1.90	0.90	1.88	0.91	1.85	0.92	1.82	0.93
							2	2.11	0.89	2.06	0.90	2.02	0.91	2.00	0.92	1.98	0.92	1.95	0.93	1.92	0.94
							7	2.31	0.92	2.26	0.93	2.21	0.95	2.20	0.95	2.17	0.96	2.14	0.97	2.11	0.98
							10	2.51	0.95	2.46	0.96	2.41	0.98	2.39	0.98	2.37	0.99	2.33	1.00	2.30	1.01
							15	2.76	0.99	2.71	1.00	2.66	1.02	2.64	1.02	2.61	1.03	2.57	1.04	2.54	1.05
2500					2500	31%	-15	1.89	0.91	1.83	0.93	1.78	0.94	1.75	0.95	1.73	0.95	1.69	0.96	1.66	0.97
							-10	2.26	0.96	2.20	0.98	2.14	0.99	2.12	1.00	2.09	1.00	2.05	1.01	2.02	1.02
							-5	2.64	1.01	2.57	1.02	2.51	1.04	2.48	1.04	2.46	1.05	2.41	1.06	2.37	1.07
							0	3.01	1.06	2.94	1.07	2.88	1.09	2.85	1.09	2.82	1.10	2.77	1.11	2.73	1.12
							2	3.16	1.08	3.09	1.09	3.03	1.11	3.00	1.11	2.97	1.12	2.92	1.13	2.87	1.14
							7	3.46	1.11	3.39	1.13	3.32	1.14	3.30	1.15	3.26	1.16	3.21	1.17	3.16	1.18
							10	3.76	1.15	3.69	1.17	3.62	1.18	3.59	1.19	3.55	1.20	3.50	1.21	3.45	1.22
							15	4.14	1.20	4.06	1.21	3.99	1.23	3.95	1.24	3.92	1.25	3.86	1.26	3.81	1.27
3500					3500	44%	-15	2.29	1.03	2.22	1.05	2.15	1.06	2.13	1.07	2.10	1.07	2.05	1.08	2.01	1.09
							-10	2.74	1.09	2.67	1.10	2.60	1.12	2.57	1.12	2.54	1.13	2.49	1.14	2.44	1.15
							-5	3.20	1.14	3.12	1.16	3.04	1.17	3.01	1.18	2.98	1.19	2.92	1.20	2.88	1.21
							0	3.65	1.19	3.57	1.21	3.49	1.23	3.46	1.24	3.42	1.24	3.36	1.26	3.31	1.27
							2	3.83	1.22	3.75	1.23	3.67	1.25	3.63	1.26	3.60	1.27	3.54	1.28	3.48	1.29
							7	4.20	1.26	4.11	1.28	4.03	1.29	4.00	1.30	3.95	1.31	3.89	1.32	3.83	1.34
							10	4.56	1.30	4.47	1.32	4.38	1.34	4.35	1.35	4.31	1.35	4.24	1.37	4.18	1.38
							15	5.02	1.35	4.92	1.37	4.83	1.39	4.79	1.40	4.75	1.41	4.68	1.42	4.62	1.44
5000					5000	63%	-15	3.43	1.39	3.33	1.41	3.23	1.43	3.19	1.44	3.15	1.45	3.08	1.46	3.02	1.47
							-10	4.11	1.46	4.00	1.49	3.90	1.51	3.85	1.51	3.81	1.52	3.73	1.54	3.67	1.55
							-5	4.80	1.54	4.67	1.56	4.57	1.58	4.52	1.59	4.47	1.60	4.39	1.61	4.31	1.63
							0	5.48	1.61	5.35	1.63	5.24	1.65	5.18	1.66	5.13	1.67	5.04	1.69	4.97	1.71
							2	5.75	1.64	5.62	1.66	5.50	1.68	5.45	1.69	5.40	1.70	5.31	1.72	5.23	1.74
							7	6.30	1.69	6.16	1.72	6.04	1.74	6.00	1.75	5.93	1.76	5.83	1.78	5.75	1.80
							10	6.84	1.75	6.70	1.78	6.58	1.80	6.52	1.81	6.46	1.82	6.36	1.84	6.27	1.86
							15	7.53	1.82	7.38	1.85	7.25	1.87	7.19	1.88	7.13	1.90	7.02	1.92	6.92	1.93
6800						85%	-15	4.47	1.79	4.33	1.82	4.20	1.84	4.14	1.85	4.09	1.86	4.00	1.88	3.92	1.89
							-10	5.35	1.88	5.20	1.91	5.07	1.94	5.01	1.95	4.95	1.96	4.85	1.98	4.77	1.99
							-5	6.23	1.98	6.08	2.00	5.94	2.03	5.87	2.04	5.81	2.05	5.70	2.08	5.61	2.09
							0	7.12	2.07	6.96	2.10	6.81	2.13	6.74	2.14	6.67	2.15	6.56	2.17	6.45	2.19
							2	7.47	2.10	7.31	2.14	7.15	2.16	7.08	2.18	7.02	2.19	6.90	2.21	6.79	2.23
							7	8.19	2.18	8.01	2.21	7.85	2.24	7.80	2.25	7.71	2.27	7.58	2.29	7.47	2.31
							10	8.90	2.25	8.72	2.28	8.55	2.31	8.47	2.33	8.40	2.34	8.27	2.37	8.15	2.39
							15	9.79	2.34	9.60	2.38	9.43	2.41	9.34	2.42	9.27	2.44	9.13	2.46	9.00	2.49
2000	2000				4000	50%	-15	2.52	0.97	2.44	0.98	2.37	1.00	2.34	1.00	2.31	1.01	2.26	1.02	2.21	1.03
							-10	3.02	1.02	2.93	1.04	2.86	1.05	2.82	1.06	2.79	1.06	2.74	1.07	2.69	1.08
							-5	3.52	1.07	3.43	1.09	3.35	1.10	3.31	1.11	3.28	1.11	3.22	1.13	3.16	1.14
							0	4.02	1.12	3.92	1.14	3.84	1.15	3.80	1.16	3.76	1.17	3.70	1.18	3.64	1.19
							2	4.22	1.14	4.12	1.16	4.04	1.17	4.00	1.18	3.96	1.19	3.89	1.20	3.83	1.21
							7	4.62	1.18	4.52	1.20	4.43	1.21	4.40	1.22	4.35	1.23	4.28	1.24	4.21	1.25
							10	5.02	1.22	4.92	1.24	4.82	1.25	4.78	1.26	4.74	1.27	4.66	1.28	4.60	1.30
							15	5.52	1.27	5.41	1.29	5.32	1.31	5.27	1.31	5.23	1.32	5.15	1.34	5.08	1.35
2000	25000				4500	56%	-15	2.92	1.12	2.83	1.14	2.75	1.15	2.71	1.16	2.68	1.17	2.62	1.18	2.56	1.19
							-10	3.50	1.18	3.40	1.20	3.31	1.21	3.27	1.22	3.24	1.23	3.17	1.24	3.12	1.25
							-5	4.08	1.24	3.97	1.26	3.88	1.27	3.84	1.28	3.80	1.29	3.73	1.30	3.67	1.31
							0	4.66	1.30	4.55	1.31	4.45	1.33	4.41	1.34	4.36	1.35	4.29	1.36	4.22	1.37
							2	4.89	1.32	4.78	1.34	4.68	1.36	4.63	1.36	4.59	1.37	4.51	1.39	4.44	1.40
							7	5.35	1.36	5.24	1.38	5.13	1.40	5.10	1.41	5.04	1.42	4.96	1.44	4.89	1.45
							10	5.82	1.41	5.70	1.43	5.59	1.45	5.54	1.46	5.49	1.47	5.41	1.48	5.33	1.50
							15	6.40	1.47	6.28	1.49	6.16	1.51	6.11	1.52	6.06	1.53	5.97	1.54	5.88	1.56
2000	35000				7000	69%	-15	3.43	1.40	3.33	1.42	3.23	1.44	3.19	1.45	3.15	1.45	3.08	1.47	3.02	1.48
							-10	4.11	1.47	4.00	1.49	3.90	1.51	3.85	1.52	3.81	1.53	3.73	1.55	3.67	1.56
							-5	4.80	1.55	4.67	1.57	4.57	1.59	4.52	1.60	4.47	1.61	4.39	1.62	4.31	1.64
							0	5.48	1.62	5.35	1.64	5.24	1.66	5.18	1.67	5.13	1.68	5.04	1.70	4.97	1.72
							2	5.75	1.65	5.62	1.67	5.50	1.69	5.45	1.70	5.40	1.71	5.31	1.73	5.23	1.75
							7	6.30	1.70	6.16	1.73	6.04	1.75	6.00	1.76	5.93	1.77	5.83	1.79	5.75	1.81
							10	6.84	1.76	6.70	1.79	6.58	1.81	6.52	1.82	6.46	1.83	6.36	1.85	6.27	1.87
							15	7.53	1.83	7.38	1.86	7.25	1.88	7.19	1.89	7.13	1.91	7.02	1.93	6.92	1.95
2000	5000				7000	88%	-15	4.47	1.72	4.33	1.74	4.20	1.77	4.14	1.78	4.09	1.79	4.00	1.80	3.92	1.82
							-10	5.35	1.81	5.20	1.83	5.07	1.86	5.01	1.87	4.95	1.88	4.85	1.90	4.77	1.91
							-5	6.23	1.90	6.08	1.92	5.94	1.95	5.87	1.96	5.81	1.97	5.70	1.99	5.61	2.01
							0	7.12	1.98	6.96	2.01	6.81	2.04	6.74	2.05	6.67	2.07	6.56	2.09	6.45	2.11
							2	7.47	2.02	7.31	2.05	7.15	2.08	7.08	2.09	7.02	2.10	6.90	2.12	6.79	2.14
							7	8.19	2.09	8.01	2.12	7.85	2.15	7.80	2.16	7.71	2.18	7.58	2.20	7.47	2.22
							10	8.90	2.16	8.72	2.19	8.55	2.22	8.47	2.24	8.40	2.25	8.27	2.27	8.15	2.29
							15	9.79	2.25	9.60	2.28	9.43	2.31	9.34	2.33	9.27	2.34	9.13	2.36	9.00	2.39

* All figures comply with EN14511

1. Cooling capacity is based on 27°CDB / 19°CWB (indoor temperature), 35°CDB (outdoor temperature).
2. Heating capacity is based on 20°CDB (indoor temperature), 7°CDB/6°CWB (outdoor temperature).
3. Capacities are based on the following conditions : - Corresponding refrigerant piping length : 5m / - Level difference : 0m
4. The total ability of connected a indoor unit is up to 12kW
5. It is impossible to connect the indoor unit for one room only.
6. This data is reference data for temperature capacity trend.

6 AJ080FCJ4EH

2) Heating

HEATING	Combination (Capacity Index)					Combination (Total)	Combination (%)	Outdoor Temperature (°C, DB)	Indoor Temperature(°C, WB)													
									14		16		18		20		21		22		24	
									TC(kW)	PI(kW)	TC(kW)	PI(kW)	TC(kW)	PI(kW)	TC(kW)	PI(kW)	TC(kW)	PI(kW)	TC(kW)	PI(kW)	TC(kW)	PI(kW)
	2000	6800				8800	110%	-15	4.65	1.79	4.50	1.82	4.37	1.84	4.31	1.85	4.26	1.86	4.16	1.88	4.08	1.89
								-10	5.57	1.88	5.41	1.91	5.28	1.94	5.21	1.95	5.15	1.96	5.05	1.98	4.96	1.99
								-5	6.49	1.98	6.33	2.00	6.18	2.03	6.11	2.04	6.05	2.05	5.94	2.08	5.84	2.09
								0	7.41	2.07	7.24	2.10	7.09	2.13	7.01	2.14	6.95	2.15	6.83	2.17	6.72	2.19
								2	7.78	2.10	7.61	2.14	7.45	2.16	7.38	2.18	7.31	2.19	7.18	2.21	7.07	2.23
								7	8.52	2.18	8.34	2.21	8.17	2.24	8.12	2.25	8.03	2.27	7.89	2.29	7.78	2.31
								10	9.26	2.25	9.07	2.28	8.90	2.31	8.82	2.33	8.75	2.34	8.61	2.37	8.48	2.39
								15	10.19	2.34	9.99	2.38	9.81	2.41	9.73	2.42	9.65	2.44	9.50	2.46	9.37	2.49
	2500	2500				5000	63%	-15	3.32	1.27	3.22	1.29	3.12	1.31	3.08	1.32	3.04	1.32	2.97	1.34	2.92	1.35
								-10	3.98	1.34	3.87	1.36	3.77	1.38	3.72	1.38	3.68	1.39	3.61	1.41	3.54	1.42
								-5	4.64	1.40	4.52	1.43	4.41	1.44	4.37	1.45	4.32	1.46	4.24	1.48	4.17	1.49
								0	5.29	1.47	5.17	1.49	5.06	1.51	5.01	1.52	4.96	1.53	4.88	1.55	4.80	1.56
								2	5.56	1.50	5.43	1.52	5.32	1.54	5.27	1.55	5.22	1.56	5.13	1.57	5.05	1.59
								7	6.09	1.55	5.96	1.57	5.84	1.59	5.80	1.60	5.73	1.61	5.64	1.63	5.56	1.64
								10	6.62	1.60	6.48	1.62	6.36	1.65	6.30	1.66	6.25	1.67	6.15	1.68	6.06	1.70
								15	7.28	1.66	7.14	1.69	7.01	1.71	6.95	1.72	6.89	1.73	6.79	1.75	6.69	1.77
	2500	3500				6000	75%	-15	3.84	1.54	3.72	1.57	3.61	1.59	3.56	1.59	3.52	1.60	3.44	1.62	3.37	1.63
								-10	4.59	1.62	4.47	1.65	4.35	1.67	4.30	1.68	4.25	1.69	4.17	1.70	4.09	1.72
								-5	5.35	1.70	5.22	1.73	5.10	1.75	5.04	1.76	4.99	1.77	4.90	1.79	4.82	1.81
								0	6.12	1.78	5.97	1.81	5.85	1.83	5.79	1.84	5.73	1.86	5.63	1.87	5.54	1.89
								2	6.42	1.81	6.28	1.84	6.15	1.87	6.09	1.88	6.03	1.89	5.93	1.91	5.84	1.93
								7	7.03	1.88	6.88	1.91	6.74	1.93	6.70	1.94	6.62	1.95	6.51	1.97	6.42	1.99
								10	7.64	1.94	7.49	1.97	7.34	2.00	7.28	2.01	7.22	2.02	7.10	2.04	7.00	2.06
								15	8.41	2.02	8.24	2.05	8.10	2.08	8.03	2.09	7.96	2.10	7.84	2.12	7.73	2.14
	2500	5000				7500	94%	-15	4.47	1.72	4.33	1.74	4.20	1.77	4.14	1.78	4.09	1.79	4.00	1.80	3.92	1.82
								-10	5.35	1.81	5.20	1.83	5.07	1.86	5.01	1.87	4.95	1.88	4.85	1.90	4.77	1.91
								-5	6.23	1.90	6.08	1.92	5.94	1.95	5.87	1.96	5.81	1.97	5.70	1.99	5.61	2.01
								0	7.12	1.98	6.96	2.01	6.81	2.04	6.74	2.05	6.67	2.07	6.56	2.09	6.45	2.11
								2	7.47	2.02	7.31	2.05	7.15	2.08	7.08	2.09	7.02	2.10	6.90	2.12	6.79	2.14
								7	8.19	2.09	8.01	2.12	7.85	2.15	7.80	2.16	7.71	2.18	7.58	2.20	7.47	2.22
								10	8.90	2.16	8.72	2.19	8.55	2.22	8.47	2.24	8.40	2.25	8.27	2.27	8.15	2.29
								15	9.79	2.25	9.60	2.28	9.43	2.31	9.34	2.33	9.27	2.34	9.13	2.36	9.00	2.39
	2500	6800				9300	116%	-15	4.78	1.86	4.63	1.89	4.50	1.91	4.44	1.92	4.38	1.93	4.28	1.95	4.20	1.97
								-10	5.73	1.96	5.57	1.99	5.43	2.01	5.36	2.02	5.30	2.04	5.19	2.06	5.10	2.07
								-5	6.67	2.05	6.51	2.08	6.35	2.11	6.29	2.13	6.22	2.14	6.10	2.16	6.00	2.18
								0	7.62	2.15	7.45	2.18	7.29	2.21	7.21	2.22	7.14	2.24	7.02	2.26	6.91	2.28
								2	8.00	2.19	7.82	2.22	7.66	2.25	7.58	2.26	7.51	2.28	7.38	2.30	7.27	2.32
								7	8.76	2.26	8.58	2.30	8.41	2.33	8.35	2.34	8.25	2.36	8.12	2.38	8.00	2.40
								10	9.52	2.34	9.33	2.37	9.15	2.41	9.07	2.42	8.99	2.44	8.85	2.46	8.73	2.49
								15	10.48	2.43	10.28	2.47	10.09	2.50	10.00	2.52	9.92	2.53	9.77	2.56	9.63	2.59
	3500	3500				7000	88%	-15	4.35	1.73	4.21	1.76	4.09	1.78	4.04	1.79	3.99	1.80	3.90	1.82	3.82	1.83
								-10	5.21	1.82	5.07	1.85	4.94	1.88	4.88	1.89	4.82	1.90	4.73	1.92	4.64	1.93
								-5	6.07	1.91	5.92	1.94	5.78	1.97	5.72	1.98	5.66	1.99	5.56	2.01	5.47	2.03
								0	6.94	2.00	6.78	2.03	6.63	2.06	6.57	2.07	6.50	2.08	6.39	2.11	6.29	2.12
								2	7.28	2.04	7.12	2.07	6.97	2.10	6.90	2.11	6.84	2.12	6.72	2.14	6.62	2.16
								7	7.98	2.11	7.81	2.14	7.65	2.17	7.60	2.18	7.51	2.20	7.39	2.22	7.28	2.24
								10	8.67	2.18	8.49	2.21	8.33	2.24	8.26	2.26	8.19	2.27	8.06	2.29	7.94	2.32
								15	9.54	2.27	9.35	2.30	9.18	2.33	9.10	2.35	9.03	2.36	8.89	2.39	8.77	2.41
	3500	5000				8500	106%	-15	4.65	1.79	4.50	1.82	4.37	1.84	4.31	1.85	4.26	1.86	4.16	1.88	4.08	1.89
								-10	5.57	1.88	5.41	1.91	5.28	1.94	5.21	1.95	5.15	1.96	5.05	1.98	4.96	1.99
								-5	6.49	1.98	6.33	2.00	6.18	2.03	6.11	2.04	6.05	2.05	5.94	2.08	5.84	2.09
								0	7.41	2.07	7.24	2.10	7.09	2.13	7.01	2.14	6.95	2.15	6.83	2.17	6.72	2.19
								2	7.78	2.10	7.61	2.14	7.45	2.16	7.38	2.18	7.31	2.19	7.18	2.21	7.07	2.23
								7	8.52	2.18	8.34	2.21	8.17	2.24	8.12	2.25	8.03	2.27	7.89	2.29	7.78	2.31
								10	9.26	2.25	9.07	2.28	8.90	2.31	8.82	2.33	8.75	2.34	8.61	2.37	8.48	2.39
								15	10.19	2.34	9.99	2.38	9.81	2.41	9.73	2.42	9.65	2.44	9.50	2.46	9.37	2.49
	3500	6800				10300	129%	-15	4.84	1.89	4.69	1.92	4.55	1.95	4.49	1.96	4.43	1.97	4.33	1.99	4.25	2.00
								-10	5.79	1.99	5.63	2.02	5.49	2.05	5.42	2.06	5.36	2.07	5.25	2.09	5.16	2.11
								-5	6.75	2.09	6.58	2.12	6.43	2.15	6.36	2.16	6.30	2.17	6.18	2.20	6.08	2.21
								0	7.71	2.19	7.53	2.22	7.37	2.25	7.30	2.26	7.23	2.28	7.10	2.30	6.99	2.32
								2	8.10	2.23	7.92	2.26	7.75	2.29	7.68	2.30	7.60	2.32	7.47	2.34	7.36	2.36
								7	8.87	2.30	8.68	2.34	8.51	2.37	8.45	2.38	8.35	2.40	8.21	2.42	8.09	2.45
								10	9.64	2.38	9.44	2.42	9.26	2.45	9.18	2.46	9.10	2.48	8.96	2.50	8.83	2.53
								15	10.60	2.48	10.40	2.51	10.21	2.55	10.12	2.56	10.04	2.58	9.89	2.61	9.75	2.63
	5000	5000				10000	125%	-15	4.87	1.86	4.71	1.89	4.58	1.91	4.52	1.92	4.46	1.93	4.36	1.95	4.27	1.97
								-10	5.83	1.96	5.67	1.99	5.52	2.01	5.46	2.02	5.40	2.04	5.29	2.06	5.19	2.07
								-5	6.79	2.05	6.62	2.08	6.47	2.11	6.40	2.13	6.33	2.14	6.21	2.16	6.11	2.18
								0	7.76	2.15	7.58	2.18	7.42	2.21	7.34	2.22	7.27	2.24	7.14	2.26	7.03	2.28
								2	8.15	2.19	7.96	2.22	7.80	2.25	7.72	2.26	7.65	2.28	7.52	2.30	7.40	2.32
								7	8.92	2.26	8.73	2.30	8.56	2.33	8.50	2.34	8.40	2.36	8.26	2.38	8.14	2.40
								10	9.70	2.34	9.50	2.37	9.32	2.41	9.23	2.42	9.16	2.44	9.01	2.46	8.88	2.49
								15	10.67	2.43	10.46	2.47	10.27	2.50	10.18	2.52	10.10	2.53	9.95	2.56	9.81	2.59

* All figures comply with EN14511

1. Cooling capacity is based on 27°CDB / 19°CWB (indoor temperature), 35°CDB (outdoor temperature).
2. Heating capacity is based on 20°CDB (indoor temperature), 7°CDB/6°CWB (outdoor temperature).
3. Capacities are based on the following conditions : - Corresponding refrigerant piping length : 5m / - Level difference : 0m
4. The total ability of connected a indoor unit is up to 12kW
5. It is impossible to connect the indoor unit for one room only.
6. This data is reference data for temperature capacity trend.

2) Heating

HEATING

Combination (Capacity Index)					Combination (Total)	Combination (%)	Outdoor Temperature (°C, DB)	Indoor Temperature(°C, WB)													
								14		16		18		20		21		22		24	
								TC(kW)	PI(kW)	TC(kW)	PI(kW)	TC(kW)	PI(kW)	TC(kW)	PI(kW)	TC(kW)	PI(kW)	TC(kW)	PI(kW)	TC(kW)	PI(kW)
5000	6800				11800	148%	-15	4.95	1.92	4.80	1.95	4.66	1.98	4.60	1.99	4.54	2.00	4.44	2.02	4.35	2.04
							-10	5.93	2.02	5.77	2.05	5.62	2.08	5.55	2.09	5.49	2.11	5.38	2.13	5.28	2.14
							-5	6.91	2.12	6.74	2.16	6.58	2.18	6.51	2.20	6.44	2.21	6.32	2.23	6.22	2.25
							0	7.90	2.22	7.71	2.26	7.55	2.29	7.47	2.30	7.40	2.31	7.27	2.34	7.16	2.36
							2	8.29	2.26	8.10	2.30	7.93	2.33	7.86	2.34	7.78	2.36	7.65	2.38	7.53	2.40
							7	9.08	2.34	8.88	2.38	8.71	2.41	8.65	2.42	8.55	2.44	8.41	2.46	8.29	2.49
							10	9.87	2.42	9.67	2.46	9.48	2.49	9.40	2.50	9.32	2.52	9.17	2.55	9.04	2.57
							15	10.85	2.52	10.64	2.55	10.45	2.59	10.36	2.61	10.28	2.62	10.12	2.65	9.98	2.68
2000	2000	2000			6000	75%	-15	3.78	1.45	3.66	1.48	3.55	1.50	3.51	1.50	3.46	1.51	3.38	1.53	3.32	1.54
							-10	4.53	1.53	4.40	1.55	4.29	1.57	4.24	1.58	4.19	1.59	4.10	1.61	4.03	1.62
							-5	5.27	1.61	5.14	1.63	5.02	1.65	4.97	1.66	4.92	1.67	4.83	1.69	4.75	1.70
							0	6.02	1.68	5.89	1.71	5.76	1.73	5.70	1.74	5.65	1.75	5.55	1.77	5.46	1.78
							2	6.32	1.71	6.18	1.74	6.05	1.76	5.99	1.77	5.94	1.78	5.84	1.80	5.75	1.82
							7	6.93	1.77	6.78	1.80	6.64	1.82	6.60	1.83	6.52	1.84	6.42	1.86	6.32	1.88
							10	7.53	1.83	7.37	1.86	7.24	1.88	7.17	1.89	7.11	1.91	7.00	1.93	6.90	1.94
							15	8.28	1.90	8.12	1.93	7.98	1.96	7.91	1.97	7.84	1.98	7.72	2.00	7.62	2.02
2000	2000	2500			6500	81%	-15	4.18	1.55	4.05	1.57	3.93	1.59	3.88	1.60	3.83	1.61	3.74	1.63	3.67	1.64
							-10	5.01	1.63	4.87	1.66	4.74	1.68	4.69	1.69	4.63	1.70	4.54	1.71	4.46	1.73
							-5	5.83	1.71	5.69	1.74	5.56	1.76	5.50	1.77	5.44	1.78	5.34	1.80	5.25	1.81
							0	6.66	1.79	6.51	1.82	6.37	1.84	6.31	1.85	6.25	1.86	6.14	1.88	6.04	1.90
							2	7.00	1.82	6.84	1.85	6.70	1.88	6.63	1.89	6.57	1.90	6.46	1.92	6.36	1.94
							7	7.66	1.89	7.50	1.92	7.35	1.94	7.30	1.95	7.22	1.96	7.10	1.99	6.99	2.00
							10	8.33	1.95	8.16	1.98	8.00	2.01	7.93	2.02	7.86	2.03	7.74	2.05	7.63	2.07
							15	9.16	2.03	8.98	2.06	8.82	2.09	8.75	2.10	8.67	2.11	8.54	2.14	8.42	2.16
2000	2000	3500			7500	94%	-15	4.69	1.71	4.55	1.73	4.42	1.76	4.36	1.77	4.30	1.78	4.20	1.79	4.12	1.81
							-10	5.62	1.80	5.47	1.83	5.33	1.85	5.26	1.86	5.21	1.87	5.10	1.89	5.01	1.91
							-5	6.55	1.89	6.39	1.92	6.24	1.94	6.17	1.95	6.11	1.96	5.99	1.98	5.90	2.00
							0	7.48	1.98	7.31	2.01	7.16	2.03	7.08	2.04	7.02	2.06	6.89	2.08	6.79	2.10
							2	7.86	2.01	7.68	2.04	7.52	2.07	7.45	2.08	7.38	2.09	7.25	2.11	7.14	2.13
							7	8.61	2.08	8.42	2.11	8.25	2.14	8.20	2.15	8.10	2.17	7.97	2.19	7.85	2.21
							10	9.35	2.15	9.16	2.18	8.99	2.21	8.91	2.23	8.83	2.24	8.69	2.26	8.57	2.28
							15	10.29	2.24	10.09	2.27	9.91	2.30	9.82	2.31	9.74	2.33	9.59	2.35	9.46	2.38
2000	2000	5000			9000	113%	-15	4.93	1.70	4.78	1.73	4.64	1.75	4.58	1.76	4.52	1.77	4.42	1.79	4.34	1.80
							-10	5.91	1.79	5.75	1.82	5.60	1.84	5.53	1.85	5.47	1.86	5.36	1.88	5.27	1.90
							-5	6.89	1.88	6.72	1.91	6.56	1.93	6.49	1.94	6.42	1.95	6.30	1.97	6.20	1.99
							0	7.87	1.97	7.69	2.00	7.52	2.02	7.45	2.03	7.37	2.05	7.25	2.07	7.13	2.09
							2	8.26	2.00	8.07	2.03	7.91	2.06	7.83	2.07	7.76	2.08	7.62	2.10	7.51	2.12
							7	9.05	2.07	8.85	2.10	8.68	2.13	8.62	2.14	8.52	2.16	8.38	2.18	8.26	2.20
							10	9.83	2.14	9.63	2.17	9.45	2.20	9.36	2.21	9.28	2.23	9.14	2.25	9.01	2.27
							15	10.82	2.23	10.61	2.26	10.42	2.29	10.33	2.30	10.24	2.32	10.09	2.34	9.95	2.37
2000	2000	6800			10800	135%	-15	5.01	1.71	4.85	1.73	4.71	1.76	4.65	1.77	4.59	1.78	4.49	1.79	4.40	1.81
							-10	6.00	1.80	5.83	1.83	5.69	1.85	5.62	1.86	5.55	1.87	5.44	1.89	5.35	1.91
							-5	6.99	1.89	6.82	1.92	6.66	1.94	6.59	1.95	6.52	1.96	6.40	1.98	6.29	2.00
							0	7.99	1.98	7.80	2.01	7.64	2.03	7.56	2.04	7.49	2.06	7.35	2.08	7.24	2.10
							2	8.39	2.01	8.20	2.04	8.03	2.07	7.95	2.08	7.87	2.09	7.74	2.11	7.62	2.13
							7	9.18	2.08	8.99	2.11	8.81	2.14	8.75	2.15	8.65	2.17	8.51	2.19	8.38	2.21
							10	9.98	2.15	9.78	2.18	9.59	2.21	9.51	2.23	9.42	2.24	9.27	2.26	9.14	2.28
							15	10.98	2.24	10.77	2.27	10.57	2.30	10.48	2.31	10.40	2.33	10.24	2.35	10.10	2.38
2000	2500	2500			7000	88%	-15	4.58	1.65	4.44	1.68	4.31	1.70	4.25	1.71	4.20	1.72	4.10	1.74	4.02	1.75
							-10	5.49	1.74	5.33	1.77	5.20	1.79	5.14	1.80	5.08	1.81	4.97	1.83	4.89	1.84
							-5	6.39	1.83	6.23	1.85	6.09	1.88	6.02	1.89	5.96	1.90	5.85	1.92	5.75	1.94
							0	7.30	1.91	7.13	1.94	6.98	1.97	6.91	1.98	6.84	1.99	6.72	2.01	6.62	2.03
							2	7.67	1.95	7.49	1.97	7.34	2.00	7.27	2.01	7.20	2.02	7.07	2.05	6.97	2.06
							7	8.40	2.01	8.22	2.04	8.05	2.07	8.00	2.08	7.91	2.10	7.78	2.12	7.66	2.14
							10	9.12	2.08	8.94	2.11	8.77	2.14	8.69	2.15	8.62	2.17	8.48	2.19	8.36	2.21
							15	10.04	2.16	9.84	2.20	9.67	2.23	9.58	2.24	9.51	2.25	9.36	2.28	9.23	2.30
2000	2500	3500			8000	100%	-15	4.88	1.67	4.73	1.69	4.59	1.72	4.53	1.73	4.48	1.74	4.37	1.75	4.29	1.77
							-10	5.85	1.76	5.69	1.78	5.54	1.81	5.48	1.82	5.41	1.83	5.30	1.85	5.21	1.86
							-5	6.82	1.84	6.65	1.87	6.49	1.90	6.42	1.91	6.36	1.92	6.24	1.94	6.13	1.95
							0	7.79	1.93	7.61	1.96	7.44	1.98	7.37	2.00	7.30	2.01	7.17	2.03	7.06	2.05
							2	8.17	1.96	7.99	1.99	7.82	2.02	7.75	2.03	7.68	2.04	7.54	2.07	7.43	2.08
							7	8.95	2.03	8.76	2.06	8.59	2.09	8.53	2.10	8.43	2.12	8.29	2.14	8.17	2.16
							10	9.73	2.10	9.53	2.13	9.35	2.16	9.27	2.17	9.19	2.19	9.04	2.21	8.91	2.23
							15	10.70	2.18	10.50	2.22	10.31	2.25	10.22	2.26	10.14	2.27	9.98	2.30	9.84	2.32
2000	2500	5000			9500	119%	-15	4.97	1.70	4.81	1.73	4.67	1.75	4.61	1.76	4.55	1.77	4.45	1.79	4.37	1.80
							-10	5.95	1.79	5.79	1.82	5.64	1.84	5.57	1.85	5.51	1.86	5.40	1.88	5.30	1.90
							-5	6.94	1.88	6.76	1.91	6.61	1.93	6.53	1.94	6.47	1.95	6.35	1.97	6.24	1.99
							0	7.92	1.97	7.74	2.00	7.57	2.02	7.50	2.03	7.43	2.05	7.30	2.07	7.18	2.09
							2	8.32	2.00	8.13	2.03	7.96	2.06	7.88	2.07	7.81	2.08	7.68	2.10	7.56	2.12
							7	9.11	2.07	8.91	2.10	8.74	2.13	8.68	2.14	8.58	2.16	8.44	2.18	8.31	2.20
							10	9.90	2.14	9.70	2.17	9.52	2.20	9.43	2.21	9.35	2.23	9.20	2.25	9.07	2.27
							15	10.89	2.23	10.68	2.26	10.49	2.29	10.40	2.30	10.31	2.32	10.16	2.34	10.02	2.37

* All figures comply with EN14511

1. Cooling capacity is based on 27°CDB / 19°CWB (indoor temperature), 35°CDB (outdoor temperature).
2. Heating capacity is based on 20°CDB (indoor temperature), 7°CDB/6°CWB (outdoor temperature).
3. Capacities are based on the following conditions : - Corresponding refrigerant piping length : 5m / - Level difference : 0m
4. The total ability of connected a indoor unit is up to 12kW
5. It is impossible to connect the indoor unit for one room only.
6. This data is reference data for temperature capacity trend.

6 AJ080FCJ4EH

2) Heating

	Combination (Capacity Index)					Combination (Total)	Combination (%)	Outdoor Temperature (°C, DB)	Indoor Temperature(°C, WB)													
									14		16		18		20		21		22		24	
									TC(kW)	PI(kW)	TC(kW)	PI(kW)	TC(kW)	PI(kW)	TC(kW)	PI(kW)	TC(kW)	PI(kW)	TC(kW)	PI(kW)	TC(kW)	PI(kW)
HEATING	2000	2500	6800			11300	141%	-15	5.32	1.79	5.16	1.82	5.01	1.84	4.94	1.85	4.88	1.86	4.77	1.88	4.68	1.89
								-10	6.38	1.88	6.20	1.91	6.04	1.94	5.97	1.95	5.90	1.96	5.78	1.98	5.68	1.99
								-5	7.43	1.98	7.25	2.00	7.08	2.03	7.00	2.04	6.93	2.05	6.80	2.08	6.69	2.09
								0	8.49	2.07	8.29	2.10	8.12	2.13	8.03	2.14	7.96	2.15	7.82	2.17	7.70	2.19
								2	8.91	2.10	8.71	2.14	8.53	2.16	8.45	2.18	8.37	2.19	8.22	2.21	8.10	2.23
								7	9.76	2.18	9.55	2.21	9.36	2.24	9.30	2.25	9.19	2.27	9.04	2.29	8.91	2.31
								10	10.61	2.25	10.39	2.28	10.20	2.31	10.10	2.33	10.02	2.34	9.86	2.37	9.72	2.39
								15	11.67	2.34	11.44	2.38	11.24	2.41	11.14	2.42	11.05	2.44	10.88	2.46	10.73	2.49
	2000	3500	3500			9000	113%	-15	4.92	1.70	4.77	1.73	4.63	1.75	4.57	1.76	4.51	1.77	4.41	1.79	4.33	1.80
								-10	5.90	1.79	5.73	1.82	5.59	1.84	5.52	1.85	5.46	1.86	5.35	1.88	5.25	1.90
								-5	6.87	1.88	6.70	1.91	6.55	1.93	6.47	1.94	6.41	1.95	6.29	1.97	6.18	1.99
								0	7.85	1.97	7.67	2.00	7.50	2.02	7.43	2.03	7.36	2.05	7.23	2.07	7.12	2.09
								2	8.24	2.00	8.06	2.03	7.89	2.06	7.81	2.07	7.74	2.08	7.61	2.10	7.49	2.12
								7	9.02	2.07	8.83	2.10	8.66	2.13	8.60	2.14	8.50	2.16	8.36	2.18	8.24	2.20
								10	9.81	2.14	9.61	2.17	9.43	2.20	9.34	2.21	9.26	2.23	9.12	2.25	8.99	2.27
								15	10.79	2.23	10.58	2.26	10.39	2.29	10.30	2.30	10.22	2.32	10.06	2.34	9.92	2.37
	2000	3500	5000			10500	131%	-15	5.01	1.71	4.85	1.73	4.71	1.76	4.65	1.77	4.59	1.78	4.49	1.79	4.40	1.81
								-10	6.00	1.80	5.83	1.83	5.69	1.85	5.62	1.86	5.55	1.87	5.44	1.89	5.35	1.91
								-5	6.99	1.89	6.82	1.92	6.66	1.94	6.59	1.95	6.52	1.96	6.40	1.98	6.29	2.00
								0	7.99	1.98	7.80	2.01	7.64	2.03	7.56	2.04	7.49	2.06	7.35	2.08	7.24	2.10
								2	8.39	2.01	8.20	2.04	8.03	2.07	7.95	2.08	7.87	2.09	7.74	2.11	7.62	2.13
								7	9.18	2.08	8.99	2.11	8.81	2.14	8.75	2.15	8.65	2.17	8.51	2.19	8.38	2.21
								10	9.98	2.15	9.78	2.18	9.59	2.21	9.51	2.23	9.42	2.24	9.27	2.26	9.14	2.28
								15	10.98	2.24	10.77	2.27	10.57	2.30	10.48	2.31	10.40	2.33	10.24	2.35	10.10	2.38
	2000	5000	5000			12000	150%	-15	5.32	1.79	5.16	1.82	5.01	1.84	4.94	1.85	4.88	1.86	4.77	1.88	4.68	1.89
								-10	6.38	1.88	6.20	1.91	6.04	1.94	5.97	1.95	5.90	1.96	5.78	1.98	5.68	1.99
								-5	7.43	1.98	7.25	2.00	7.08	2.03	7.00	2.04	6.93	2.05	6.80	2.08	6.69	2.09
								0	8.49	2.07	8.29	2.10	8.12	2.13	8.03	2.14	7.96	2.15	7.82	2.17	7.70	2.19
								2	8.91	2.10	8.71	2.14	8.53	2.16	8.45	2.18	8.37	2.19	8.22	2.21	8.10	2.23
								7	9.76	2.18	9.55	2.21	9.36	2.24	9.30	2.25	9.19	2.27	9.04	2.29	8.91	2.31
								10	10.61	2.25	10.39	2.28	10.20	2.31	10.10	2.33	10.02	2.34	9.86	2.37	9.72	2.39
								15	11.67	2.34	11.44	2.38	11.24	2.41	11.14	2.42	11.05	2.44	10.88	2.46	10.73	2.49
	2500	2500	2500			7500	94%	-15	4.88	1.66	4.72	1.69	4.59	1.71	4.53	1.72	4.47	1.73	4.37	1.74	4.28	1.76
								-10	5.84	1.75	5.68	1.77	5.54	1.80	5.47	1.81	5.41	1.82	5.30	1.84	5.21	1.85
								-5	6.81	1.83	6.64	1.86	6.48	1.89	6.41	1.90	6.35	1.91	6.23	1.93	6.13	1.94
								0	7.78	1.92	7.60	1.95	7.43	1.98	7.36	1.99	7.29	2.00	7.16	2.02	7.05	2.04
								2	8.16	1.95	7.98	1.98	7.82	2.01	7.74	2.02	7.67	2.03	7.53	2.06	7.42	2.07
								7	8.94	2.02	8.75	2.05	8.58	2.08	8.52	2.09	8.42	2.11	8.28	2.13	8.16	2.15
								10	9.72	2.09	9.52	2.12	9.34	2.15	9.26	2.16	9.18	2.18	9.03	2.20	8.90	2.22
								15	10.69	2.17	10.48	2.21	10.30	2.24	10.21	2.25	10.12	2.26	9.97	2.29	9.83	2.31
	2500	2500	3500			8500	106%	-15	4.92	1.67	4.76	1.69	4.63	1.72	4.56	1.73	4.51	1.74	4.40	1.75	4.32	1.77
								-10	5.89	1.76	5.73	1.78	5.58	1.81	5.51	1.82	5.45	1.83	5.34	1.85	5.25	1.86
								-5	6.86	1.84	6.69	1.87	6.54	1.90	6.47	1.91	6.40	1.92	6.28	1.94	6.18	1.95
								0	7.84	1.93	7.66	1.96	7.50	1.98	7.42	2.00	7.35	2.01	7.22	2.03	7.11	2.05
								2	8.23	1.96	8.05	1.99	7.88	2.02	7.80	2.03	7.73	2.04	7.60	2.07	7.48	2.08
								7	9.01	2.03	8.82	2.06	8.65	2.09	8.59	2.10	8.49	2.12	8.35	2.14	8.23	2.16
								10	9.80	2.10	9.60	2.13	9.42	2.16	9.33	2.17	9.25	2.19	9.11	2.21	8.98	2.23
								15	10.78	2.18	10.57	2.22	10.38	2.25	10.29	2.26	10.21	2.27	10.05	2.30	9.91	2.32
	2500	2500	5000			10000	125%	-15	5.01	1.70	4.85	1.73	4.71	1.75	4.65	1.76	4.59	1.77	4.49	1.79	4.40	1.80
								-10	6.00	1.79	5.83	1.82	5.69	1.84	5.62	1.85	5.55	1.86	5.44	1.88	5.35	1.90
								-5	6.99	1.88	6.82	1.91	6.66	1.93	6.59	1.94	6.52	1.95	6.40	1.97	6.29	1.99
								0	7.99	1.97	7.80	2.00	7.64	2.02	7.56	2.03	7.49	2.05	7.35	2.07	7.24	2.09
								2	8.39	2.00	8.20	2.03	8.03	2.06	7.95	2.07	7.87	2.08	7.74	2.10	7.62	2.12
								7	9.18	2.07	8.99	2.10	8.81	2.13	8.75	2.14	8.65	2.16	8.51	2.18	8.38	2.20
								10	9.98	2.14	9.78	2.17	9.59	2.20	9.51	2.21	9.42	2.23	9.27	2.25	9.14	2.27
								15	10.98	2.23	10.77	2.26	10.57	2.29	10.48	2.30	10.40	2.32	10.24	2.34	10.10	2.37
	2500	2500	6800			11800	148%	-15	5.32	1.79	5.16	1.82	5.01	1.84	4.94	1.85	4.88	1.86	4.77	1.88	4.68	1.89
								-10	6.38	1.88	6.20	1.91	6.04	1.94	5.97	1.95	5.90	1.96	5.78	1.98	5.68	1.99
								-5	7.43	1.98	7.25	2.00	7.08	2.03	7.00	2.04	6.93	2.05	6.80	2.08	6.69	2.09
								0	8.49	2.07	8.29	2.10	8.12	2.13	8.03	2.14	7.96	2.15	7.82	2.17	7.70	2.19
								2	8.91	2.10	8.71	2.14	8.53	2.16	8.45	2.18	8.37	2.19	8.22	2.21	8.10	2.23
								7	9.76	2.18	9.55	2.21	9.36	2.24	9.30	2.25	9.19	2.27	9.04	2.29	8.91	2.31
								10	10.61	2.25	10.39	2.28	10.20	2.31	10.10	2.33	10.02	2.34	9.86	2.37	9.72	2.39
								15	11.67	2.34	11.44	2.38	11.24	2.41	11.14	2.42	11.05	2.44	10.88	2.46	10.73	2.49
	2500	3500	3500			9500	119%	-15	4.96	1.70	4.80	1.73	4.66	1.75	4.60	1.76	4.54	1.77	4.44	1.79	4.36	1.80
								-10	5.94	1.79	5.77	1.82	5.63	1.84	5.56	1.85	5.50	1.86	5.39	1.88	5.29	1.90
								-5	6.92	1.88	6.75	1.91	6.59	1.93	6.52	1.94	6.45	1.95	6.33	1.97	6.23	1.99
								0	7.90	1.97	7.72	2.00	7.56	2.02	7.48	2.03	7.41	2.05	7.28	2.07	7.17	2.09
								2	8.30	2.00	8.11	2.03	7.94	2.06	7.87	2.07	7.79	2.08	7.66	2.10	7.54	2.12
								7	9.09	2.07	8.89	2.10	8.72	2.13	8.66	2.14	8.56	2.16	8.42	2.18	8.30	2.20
								10	9.88	2.14	9.68	2.17	9.49	2.20	9.41	2.21	9.33	2.23	9.18	2.25	9.05	2.27
								15	10.87	2.23	10.66	2.26	10.46	2.29	10.37	2.30	10.29	2.32	10.13	2.34	9.99	2.37

* All figures comply with EN14511

1. Cooling capacity is based on 27°CDB / 19°CWB (indoor temperature), 35°CDB (outdoor temperature).
2. Heating capacity is based on 20°CDB (indoor temperature), 7°CDB/6°CWB (outdoor temperature).
3. Capacities are based on the following conditions : - Corresponding refrigerant piping length : 5m / - Level difference : 0m
4. The total ability of connected a indoor unit is up to 12kW
5. It is impossible to connect the indoor unit for one room only.
6. This data is reference data for temperature capacity trend.

2) Heating

HEATING

Combination (Capacity Index)					Combination (Total)	Combination (%)	Outdoor Temperature (°C, DB)	Indoor Temperature(°C, WB)													
								14		16		18		20		21		22		24	
								TC(kW)	PI(kW)	TC(kW)	PI(kW)	TC(kW)	PI(kW)	TC(kW)	PI(kW)	TC(kW)	PI(kW)	TC(kW)	PI(kW)	TC(kW)	PI(kW)
2500	3500	5000			11000	138%	-15	5.32	1.71	5.16	1.73	5.01	1.76	4.94	1.77	4.88	1.78	4.77	1.79	4.68	1.81
							-10	6.38	1.80	6.20	1.83	6.04	1.85	5.97	1.86	5.90	1.87	5.78	1.89	5.68	1.91
							-5	7.43	1.89	7.25	1.92	7.08	1.94	7.00	1.95	6.93	1.96	6.80	1.98	6.69	2.00
							0	8.49	1.98	8.29	2.01	8.12	2.03	8.03	2.04	7.96	2.06	7.82	2.08	7.70	2.10
							2	8.91	2.01	8.71	2.04	8.53	2.07	8.45	2.08	8.37	2.09	8.22	2.11	8.10	2.13
							7	9.76	2.08	9.55	2.11	9.36	2.14	9.30	2.15	9.19	2.17	9.04	2.19	8.91	2.21
							10	10.61	2.15	10.39	2.18	10.20	2.21	10.10	2.23	10.02	2.24	9.86	2.26	9.72	2.28
							15	11.67	2.24	11.44	2.27	11.24	2.30	11.14	2.31	11.05	2.33	10.88	2.35	10.73	2.38
3500	3500	3500			10500	131%	-15	5.00	1.71	4.84	1.73	4.70	1.76	4.64	1.77	4.58	1.78	4.48	1.79	4.39	1.81
							-10	5.99	1.80	5.82	1.83	5.67	1.85	5.60	1.86	5.54	1.87	5.43	1.89	5.33	1.91
							-5	6.98	1.89	6.80	1.92	6.64	1.94	6.57	1.95	6.50	1.96	6.38	1.98	6.28	2.00
							0	7.97	1.98	7.78	2.01	7.62	2.03	7.54	2.04	7.47	2.06	7.34	2.08	7.22	2.10
							2	8.37	2.01	8.18	2.04	8.01	2.07	7.93	2.08	7.86	2.09	7.72	2.11	7.60	2.13
							7	9.16	2.08	8.97	2.11	8.79	2.14	8.73	2.15	8.63	2.17	8.49	2.19	8.36	2.21
							10	9.96	2.15	9.76	2.18	9.57	2.21	9.48	2.23	9.40	2.24	9.25	2.26	9.12	2.28
							15	10.95	2.24	10.74	2.27	10.55	2.30	10.46	2.31	10.37	2.33	10.21	2.35	10.07	2.38
3500	3500	5000			12000	150%	-15	5.32	1.73	5.16	1.76	5.01	1.78	4.94	1.79	4.88	1.80	4.77	1.82	4.68	1.83
							-10	6.38	1.82	6.20	1.85	6.04	1.88	5.97	1.89	5.90	1.90	5.78	1.92	5.68	1.93
							-5	7.43	1.91	7.25	1.94	7.08	1.97	7.00	1.98	6.93	1.99	6.80	2.01	6.69	2.03
							0	8.49	2.00	8.29	2.03	8.12	2.06	8.03	2.07	7.96	2.08	7.82	2.11	7.70	2.12
							2	8.91	2.04	8.71	2.07	8.53	2.10	8.45	2.11	8.37	2.12	8.22	2.14	8.10	2.16
							7	9.76	2.11	9.55	2.14	9.36	2.17	9.30	2.18	9.19	2.20	9.04	2.22	8.91	2.24
							10	10.61	2.18	10.39	2.21	10.20	2.24	10.10	2.26	10.02	2.27	9.86	2.29	9.72	2.32
							15	11.67	2.27	11.44	2.30	11.24	2.33	11.14	2.35	11.05	2.36	10.88	2.39	10.73	2.41
2000	2000	2000	2000		8000	100%	-15	4.88	1.67	4.72	1.69	4.59	1.72	4.53	1.73	4.47	1.74	4.37	1.75	4.28	1.77
							-10	5.84	1.76	5.68	1.78	5.54	1.81	5.47	1.82	5.41	1.83	5.30	1.85	5.21	1.86
							-5	6.81	1.84	6.64	1.87	6.48	1.90	6.41	1.91	6.35	1.92	6.23	1.94	6.13	1.95
							0	7.78	1.93	7.60	1.96	7.43	1.98	7.36	2.00	7.29	2.01	7.16	2.03	7.05	2.05
							2	8.16	1.96	7.98	1.99	7.82	2.02	7.74	2.03	7.67	2.04	7.53	2.07	7.42	2.08
							7	8.94	2.03	8.75	2.06	8.58	2.09	8.52	2.10	8.42	2.12	8.28	2.14	8.16	2.16
							10	9.72	2.10	9.52	2.13	9.34	2.16	9.26	2.17	9.18	2.19	9.03	2.21	8.90	2.23
							15	10.69	2.18	10.48	2.22	10.30	2.25	10.21	2.26	10.12	2.27	9.97	2.30	9.83	2.32
2000	2000	2000	2500		8500	106%	-15	4.91	1.67	4.76	1.69	4.62	1.72	4.56	1.73	4.50	1.74	4.40	1.75	4.32	1.77
							-10	5.88	1.76	5.72	1.78	5.57	1.81	5.51	1.82	5.45	1.83	5.34	1.85	5.24	1.86
							-5	6.86	1.84	6.68	1.87	6.53	1.90	6.46	1.91	6.39	1.92	6.27	1.94	6.17	1.95
							0	7.83	1.93	7.65	1.96	7.49	1.98	7.41	2.00	7.34	2.01	7.21	2.03	7.10	2.05
							2	8.22	1.96	8.04	1.99	7.87	2.02	7.79	2.03	7.72	2.04	7.59	2.07	7.47	2.08
							7	9.00	2.03	8.81	2.06	8.64	2.09	8.58	2.10	8.48	2.12	8.34	2.14	8.22	2.16
							10	9.79	2.10	9.59	2.13	9.41	2.16	9.32	2.17	9.24	2.19	9.09	2.21	8.97	2.23
							15	10.77	2.18	10.56	2.22	10.37	2.25	10.28	2.26	10.19	2.27	10.04	2.30	9.90	2.32
2000	2000	2000	3500		9500	119%	-15	4.95	1.70	4.80	1.73	4.66	1.75	4.60	1.76	4.54	1.77	4.44	1.79	4.35	1.80
							-10	5.93	1.79	5.77	1.82	5.62	1.84	5.55	1.85	5.49	1.86	5.38	1.88	5.28	1.90
							-5	6.91	1.88	6.74	1.91	6.58	1.93	6.51	1.94	6.44	1.95	6.32	1.97	6.22	1.99
							0	7.90	1.97	7.71	2.00	7.55	2.02	7.47	2.03	7.40	2.05	7.27	2.07	7.16	2.09
							2	8.29	2.00	8.10	2.03	7.93	2.06	7.86	2.07	7.78	2.08	7.65	2.10	7.53	2.12
							7	9.08	2.07	8.88	2.10	8.71	2.13	8.65	2.14	8.55	2.16	8.41	2.18	8.29	2.20
							10	9.87	2.14	9.67	2.17	9.48	2.20	9.40	2.21	9.32	2.23	9.17	2.25	9.04	2.27
							15	10.85	2.23	10.64	2.26	10.45	2.29	10.36	2.30	10.28	2.32	10.12	2.34	9.98	2.37
2000	2000	2000	5000		11000	138%	-15	5.32	1.75	5.16	1.77	5.01	1.80	4.94	1.81	4.88	1.82	4.77	1.84	4.68	1.85
							-10	6.38	1.84	6.20	1.87	6.04	1.89	5.97	1.90	5.90	1.91	5.78	1.93	5.68	1.95
							-5	7.43	1.93	7.25	1.96	7.08	1.99	7.00	2.00	6.93	2.01	6.80	2.03	6.69	2.05
							0	8.49	2.02	8.29	2.05	8.12	2.08	8.03	2.09	7.96	2.10	7.82	2.13	7.70	2.14
							2	8.91	2.06	8.71	2.09	8.53	2.12	8.45	2.13	8.37	2.14	8.22	2.16	8.10	2.18
							7	9.76	2.13	9.55	2.16	9.36	2.19	9.30	2.20	9.19	2.22	9.04	2.24	8.91	2.26
							10	10.61	2.20	10.39	2.23	10.20	2.26	10.10	2.28	10.02	2.29	9.86	2.31	9.72	2.34
							15	11.67	2.29	11.44	2.32	11.24	2.35	11.14	2.37	11.05	2.38	10.88	2.41	10.73	2.43
2000	2000	2500	2500		90000	113%	-15	4.95	1.70	4.79	1.73	4.65	1.75	4.59	1.76	4.53	1.77	4.43	1.79	4.35	1.80
							-10	5.92	1.79	5.76	1.82	5.61	1.84	5.55	1.85	5.48	1.86	5.37	1.88	5.28	1.90
							-5	6.90	1.88	6.73	1.91	6.58	1.93	6.50	1.94	6.44	1.95	6.32	1.97	6.21	1.99
							0	7.89	1.97	7.70	2.00	7.54	2.02	7.46	2.03	7.39	2.05	7.26	2.07	7.15	2.09
							2	8.28	2.00	8.09	2.03	7.93	2.06	7.85	2.07	7.77	2.08	7.64	2.10	7.53	2.12
							7	9.07	2.07	8.87	2.10	8.70	2.13	8.64	2.14	8.54	2.16	8.40	2.18	8.28	2.20
							10	9.85	2.14	9.65	2.17	9.47	2.20	9.39	2.21	9.31	2.23	9.16	2.25	9.03	2.27
							15	10.84	2.23	10.63	2.26	10.44	2.29	10.35	2.30	10.27	2.32	10.11	2.34	9.97	2.37
2000	2000	2500	3500		10000	125%	-15	4.99	1.70	4.83	1.73	4.69	1.75	4.63	1.76	4.57	1.77	4.47	1.79	4.38	1.80
							-10	5.97	1.79	5.81	1.82	5.66	1.84	5.59	1.85	5.53	1.86	5.42	1.88	5.32	1.90
							-5	6.96	1.88	6.79	1.91	6.63	1.93	6.56	1.94	6.49	1.95	6.37	1.97	6.26	1.99
							0	7.95	1.97	7.77	2.00	7.60	2.02	7.52	2.03	7.45	2.05	7.32	2.07	7.21	2.09
							2	8.35	2.00	8.16	2.03	7.99	2.06	7.91	2.07	7.84	2.08	7.70	2.10	7.59	2.12
							7	9.14	2.07	8.95	2.10	8.77	2.13	8.71	2.14	8.61	2.16	8.47	2.18	8.34	2.20
							10	9.93	2.14	9.73	2.17	9.55	2.20	9.46	2.21	9.38	2.23	9.23	2.25	9.10	2.27
							15	10.93	2.23	10.72	2.26	10.52	2.29	10.43	2.30	10.35	2.32	10.19	2.34	10.05	2.37

* All figures comply with EN14511

1. Cooling capacity is based on 27°CDB / 19°CWB (indoor temperature), 35°CDB (outdoor temperature).
2. Heating capacity is based on 20°CDB (indoor temperature), 7°CDB/6°CWB (outdoor temperature).
3. Capacities are based on the following conditions : - Corresponding refrigerant piping length : 5m / - Level difference : 0m
4. The total ability of connected a indoor unit is up to 12kW
5. It is impossible to connect the indoor unit for one room only.
6. This data is reference data for temperature capacity trend.

6 AJ080FCJ4EH

2) Heating

	Combination (Capacity Index)					Combination (Total)	Combination (%)	Outdoor Temperature (°C, DB)	Indoor Temperature(°C, WB)													
									14		16		18		20		21		22		24	
									TC(kW)	PI(kW)	TC(kW)	PI(kW)	TC(kW)	PI(kW)	TC(kW)	PI(kW)	TC(kW)	PI(kW)	TC(kW)	PI(kW)	TC(kW)	PI(kW)
HEATING	2000	2000	2500	5000		11500	144%	-15	5.32	1.75	5.16	1.77	5.01	1.80	4.94	1.81	4.88	1.82	4.77	1.84	4.68	1.85
								-10	6.38	1.84	6.20	1.87	6.04	1.89	5.97	1.90	5.90	1.91	5.78	1.93	5.68	1.95
								-5	7.43	1.93	7.25	1.96	7.08	1.99	7.00	2.00	6.93	2.01	6.80	2.03	6.69	2.05
								0	8.49	2.02	8.29	2.05	8.12	2.08	8.03	2.09	7.96	2.10	7.82	2.13	7.70	2.14
								2	8.91	2.06	8.71	2.09	8.53	2.12	8.45	2.13	8.37	2.14	8.22	2.16	8.10	2.18
								7	9.76	2.13	9.55	2.16	9.36	2.19	9.30	2.20	9.19	2.22	9.04	2.24	8.91	2.26
								10	10.61	2.20	10.39	2.23	10.20	2.26	10.10	2.28	10.02	2.29	9.86	2.31	9.72	2.34
								15	11.67	2.29	11.44	2.32	11.24	2.35	11.14	2.37	11.05	2.38	10.88	2.41	10.73	2.43
	2000	2000	3500	3500		11000	138%	-15	5.03	1.73	4.87	1.76	4.73	1.78	4.67	1.79	4.61	1.80	4.50	1.82	4.42	1.83
								-10	6.02	1.82	5.85	1.85	5.70	1.88	5.64	1.89	5.57	1.90	5.46	1.92	5.36	1.93
								-5	7.02	1.91	6.84	1.94	6.68	1.97	6.61	1.98	6.54	1.99	6.42	2.01	6.31	2.03
								0	8.01	2.00	7.83	2.03	7.66	2.06	7.58	2.07	7.51	2.08	7.38	2.11	7.27	2.12
								2	8.41	2.04	8.22	2.07	8.05	2.10	7.97	2.11	7.90	2.12	7.76	2.14	7.65	2.16
								7	9.21	2.11	9.02	2.14	8.84	2.17	8.78	2.18	8.68	2.20	8.54	2.22	8.41	2.24
								10	10.01	2.18	9.81	2.21	9.63	2.24	9.54	2.26	9.46	2.27	9.31	2.29	9.17	2.32
								15	11.02	2.27	10.80	2.30	10.61	2.33	10.52	2.35	10.43	2.36	10.27	2.39	10.13	2.41
	2000	2500	2500	2500		9500	119%	-15	4.97	1.70	4.82	1.73	4.68	1.75	4.62	1.76	4.56	1.77	4.46	1.79	4.37	1.80
								-10	5.96	1.79	5.79	1.82	5.65	1.84	5.58	1.85	5.52	1.86	5.40	1.88	5.31	1.90
								-5	6.94	1.88	6.77	1.91	6.61	1.93	6.54	1.94	6.47	1.95	6.35	1.97	6.25	1.99
								0	7.93	1.97	7.75	2.00	7.58	2.02	7.51	2.03	7.43	2.05	7.30	2.07	7.19	2.09
								2	8.33	2.00	8.14	2.03	7.97	2.06	7.89	2.07	7.82	2.08	7.69	2.10	7.57	2.12
								7	9.12	2.07	8.92	2.10	8.75	2.13	8.69	2.14	8.59	2.16	8.45	2.18	8.32	2.20
								10	9.91	2.14	9.71	2.17	9.53	2.20	9.44	2.21	9.36	2.23	9.21	2.25	9.08	2.27
								15	10.90	2.23	10.69	2.26	10.50	2.29	10.41	2.30	10.33	2.32	10.17	2.34	10.03	2.37
	2000	2500	2500	3500		10500	131%	-15	5.02	1.73	4.86	1.76	4.72	1.78	4.65	1.79	4.60	1.80	4.49	1.82	4.41	1.83
								-10	6.01	1.82	5.84	1.85	5.69	1.88	5.62	1.89	5.56	1.90	5.45	1.92	5.35	1.93
								-5	7.00	1.91	6.83	1.94	6.67	1.97	6.59	1.98	6.53	1.99	6.40	2.01	6.30	2.03
								0	8.00	2.00	7.81	2.03	7.64	2.06	7.57	2.07	7.49	2.08	7.36	2.11	7.25	2.12
								2	8.39	2.04	8.21	2.07	8.04	2.10	7.96	2.11	7.88	2.12	7.75	2.14	7.63	2.16
								7	9.19	2.11	9.00	2.14	8.82	2.17	8.76	2.18	8.66	2.20	8.52	2.22	8.39	2.24
								10	9.99	2.18	9.79	2.21	9.60	2.24	9.52	2.26	9.44	2.27	9.29	2.29	9.15	2.32
								15	10.99	2.27	10.78	2.30	10.59	2.33	10.49	2.35	10.41	2.36	10.25	2.39	10.11	2.41
	200	2500	2500	5000		12000	150%	-15	5.32	1.79	5.16	1.82	5.01	1.84	4.94	1.85	4.88	1.86	4.77	1.88	4.68	1.89
								-10	6.38	1.88	6.20	1.91	6.04	1.94	5.97	1.95	5.90	1.96	5.78	1.98	5.68	1.99
								-5	7.43	1.98	7.25	2.00	7.08	2.03	7.00	2.04	6.93	2.05	6.80	2.08	6.69	2.09
								0	8.49	2.07	8.29	2.10	8.12	2.13	8.03	2.14	7.96	2.15	7.82	2.17	7.70	2.19
								2	8.91	2.10	8.71	2.14	8.53	2.16	8.45	2.18	8.37	2.19	8.22	2.21	8.10	2.23
								7	9.76	2.18	9.55	2.21	9.36	2.24	9.30	2.25	9.19	2.27	9.04	2.29	8.91	2.31
								10	10.61	2.25	10.39	2.28	10.20	2.31	10.10	2.33	10.02	2.34	9.86	2.37	9.72	2.39
								15	11.67	2.34	11.44	2.38	11.24	2.41	11.14	2.42	11.05	2.44	10.88	2.46	10.73	2.49
	2000	2500	3500	3500		11500	144%	-15	5.32	1.75	5.16	1.77	5.01	1.80	4.94	1.81	4.88	1.82	4.77	1.84	4.68	1.85
								-10	6.38	1.84	6.20	1.87	6.04	1.89	5.97	1.90	5.90	1.91	5.78	1.93	5.68	1.95
								-5	7.43	1.93	7.25	1.96	7.08	1.99	7.00	2.00	6.93	2.01	6.80	2.03	6.69	2.05
								0	8.49	2.02	8.29	2.05	8.12	2.08	8.03	2.09	7.96	2.10	7.82	2.13	7.70	2.14
								2	8.91	2.06	8.71	2.09	8.53	2.12	8.45	2.13	8.37	2.14	8.22	2.16	8.10	2.18
								7	9.76	2.13	9.55	2.16	9.36	2.19	9.30	2.20	9.19	2.22	9.04	2.24	8.91	2.26
								10	10.61	2.20	10.39	2.23	10.20	2.26	10.10	2.28	10.02	2.29	9.86	2.31	9.72	2.34
								15	11.67	2.29	11.44	2.32	11.24	2.35	11.14	2.37	11.05	2.38	10.88	2.41	10.73	2.43
	2500	2500	2500	2500		10000	125%	-15	5.01	1.70	4.85	1.73	4.71	1.75	4.65	1.76	4.59	1.77	4.49	1.79	4.40	1.80
								-10	6.00	1.79	5.83	1.82	5.69	1.84	5.62	1.85	5.55	1.86	5.44	1.88	5.35	1.90
								-5	6.99	1.88	6.82	1.91	6.66	1.93	6.59	1.94	6.52	1.95	6.40	1.97	6.29	1.99
								0	7.99	1.97	7.80	2.00	7.64	2.02	7.56	2.03	7.49	2.05	7.35	2.07	7.24	2.09
								2	8.39	2.00	8.20	2.03	8.03	2.06	7.95	2.07	7.87	2.08	7.74	2.10	7.62	2.12
								7	9.18	2.07	8.99	2.10	8.81	2.13	8.75	2.14	8.65	2.16	8.51	2.18	8.38	2.20
								10	9.98	2.14	9.78	2.17	9.59	2.20	9.51	2.21	9.42	2.23	9.27	2.25	9.14	2.27
								15	10.98	2.23	10.77	2.26	10.57	2.29	10.48	2.30	10.40	2.32	10.24	2.34	10.10	2.37
	2500	2500	2500	3500		11000	138%	-15	5.32	1.73	5.16	1.76	5.01	1.78	4.94	1.79	4.88	1.80	4.77	1.82	4.68	1.83
								-10	6.38	1.82	6.20	1.85	6.04	1.88	5.97	1.89	5.90	1.90	5.78	1.92	5.68	1.93
								-5	7.43	1.91	7.25	1.94	7.08	1.97	7.00	1.98	6.93	1.99	6.80	2.01	6.69	2.03
								0	8.49	2.00	8.29	2.03	8.12	2.06	8.03	2.07	7.96	2.08	7.82	2.11	7.70	2.12
								2	8.91	2.04	8.71	2.07	8.53	2.10	8.45	2.11	8.37	2.12	8.22	2.14	8.10	2.16
								7	9.76	2.11	9.55	2.14	9.36	2.17	9.30	2.18	9.19	2.20	9.04	2.22	8.91	2.24
								10	10.61	2.18	10.39	2.21	10.20	2.24	10.10	2.26	10.02	2.27	9.86	2.29	9.72	2.32
								15	11.67	2.27	11.44	2.30	11.24	2.33	11.14	2.35	11.05	2.36	10.88	2.39	10.73	2.41
	2500	2500	3500	2500		12000	150%	-15	5.32	1.75	5.16	1.77	5.01	1.80	4.88	1.82	4.82	1.83	4.77	1.84	4.68	1.85
								-10	6.38	1.84	6.20	1.87	6.04	1.89	5.90	1.91	5.84	1.92	5.78	1.93	5.68	1.95
								-5	7.43	1.93	7.25	1.96	7.08	1.99	6.93	2.01	6.86	2.02	6.80	2.03	6.69	2.05
								0	8.49	2.02	8.29	2.05	8.12	2.08	7.96	2.10	7.88	2.11	7.82	2.13	7.70	2.14
								2	8.91	2.06	8.71	2.09	8.53	2.12	8.37	2.14	8.29	2.15	8.22	2.16	8.10	2.18
								7	9.97	2.15	9.76	2.18	9.57	2.21	9.30	2.20	9.32	2.25	9.24	2.26	9.11	2.28
								10	10.61	2.20	10.39	2.23	10.20	2.26	10.02	2.29	9.94	2.30	9.86	2.31	9.72	2.34
								15	11.67	2.29	11.44	2.32	11.24	2.35	11.05	2.38	10.96	2.40	10.88	2.41	10.73	2.43

* All figures comply with EN14511

1. Cooling capacity is based on 27°CDB / 19°CWB (indoor temperature), 35°CDB (outdoor temperature).
2. Heating capacity is based on 20°CDB (indoor temperature), 7°CDB/6°CWB (outdoor temperature).
3. Capacities are based on the following conditions : - Corresponding refrigerant piping length : 5m / - Level difference : 0m
4. The total ability of connected a indoor unit is up to 12kW
5. It is impossible to connect the indoor unit for one room only.
6. This data is reference data for temperature capacity trend.

7 AJ100FCJ5EH

1) Cooling

COOLING

Combination (Capacity Index)	Combination (Total)	Combination (%)	Outdoor Temperature (°C, DB)	Indoor Temperature(°C, WB)													
				14		16		18		19		20		22		24	
				TC(kW)	PI(kW)	TC(kW)	PI(kW)	TC(kW)	PI(kW)	TC(kW)	PI(kW)	TC(kW)	PI(kW)	TC(kW)	PI(kW)	TC(kW)	PI(kW)
2000	2000	20%	10	1.60	0.41	2.32	0.45	2.42	0.49	2.46	0.51	2.51	0.52	2.61	0.55	2.71	0.57
			12	1.60	0.42	2.28	0.47	2.38	0.51	2.43	0.52	2.48	0.54	2.57	0.56	2.67	0.58
			14	1.60	0.44	2.24	0.48	2.34	0.52	2.39	0.54	2.44	0.55	2.53	0.57	2.63	0.59
			16	1.60	0.46	2.21	0.50	2.30	0.54	2.35	0.55	2.40	0.56	2.50	0.59	2.59	0.60
			18	1.60	0.48	2.17	0.52	2.27	0.55	2.31	0.57	2.36	0.58	2.46	0.60	2.55	0.61
			20	1.60	0.50	2.13	0.54	2.23	0.57	2.28	0.58	2.32	0.59	2.42	0.61	2.52	0.62
			21	1.60	0.51	2.12	0.55	2.21	0.58	2.26	0.59	2.30	0.60	2.40	0.62	2.50	0.63
			23	1.60	0.53	2.08	0.57	2.17	0.59	2.22	0.61	2.27	0.62	2.36	0.63	2.46	0.64
			25	1.60	0.55	2.04	0.58	2.14	0.61	2.18	0.62	2.23	0.63	2.32	0.65	2.42	0.65
			27	1.60	0.57	2.01	0.60	2.10	0.63	2.15	0.64	2.19	0.65	2.29	0.66	2.38	0.67
			29	1.60	0.59	1.97	0.62	2.06	0.65	2.11	0.66	2.16	0.66	2.25	0.68	2.34	0.68
			31	1.60	0.61	1.94	0.64	2.03	0.66	2.07	0.67	2.12	0.68	2.21	0.69	2.30	0.69
			33	1.60	0.63	1.90	0.66	1.99	0.68	2.04	0.69	2.08	0.70	2.17	0.71	2.27	0.71
			35	1.60	0.65	1.86	0.68	1.95	0.70	2.00	0.70	2.04	0.72	2.14	0.72	2.23	0.72
			37	1.60	0.68	1.83	0.70	1.92	0.72	1.96	0.73	2.01	0.73	2.10	0.74	2.19	0.74
			39	1.60	0.70	1.79	0.72	1.88	0.74	1.93	0.75	1.97	0.75	2.06	0.75	2.15	0.75
			42	1.58	0.73	1.74	0.75	1.83	0.77	1.87	0.77	1.92	0.78	2.01	0.78	2.10	0.77
			44	1.50	0.76	1.71	0.78	1.79	0.79	1.84	0.79	1.88	0.80	1.97	0.80	2.06	0.79
			46	1.46	0.78	1.67	0.80	1.76	0.81	1.80	0.81	1.84	0.81	1.93	0.81	2.02	0.81
2500	2500	25%	10	2.00	0.46	2.90	0.52	3.02	0.56	3.08	0.58	3.14	0.60	3.26	0.63	3.39	0.65
			12	2.00	0.48	2.85	0.53	2.97	0.58	3.03	0.60	3.09	0.61	3.22	0.64	3.34	0.66
			14	2.00	0.51	2.80	0.55	2.93	0.60	2.99	0.61	3.05	0.63	3.17	0.65	3.29	0.67
			16	2.00	0.53	2.76	0.57	2.88	0.61	2.94	0.63	3.00	0.65	3.12	0.67	3.24	0.69
			18	2.00	0.55	2.71	0.59	2.83	0.63	2.89	0.65	2.95	0.66	3.07	0.68	3.19	0.70
			20	2.00	0.57	2.67	0.61	2.79	0.65	2.85	0.67	2.90	0.68	3.02	0.70	3.14	0.71
			21	2.00	0.58	2.64	0.62	2.76	0.66	2.82	0.67	2.88	0.69	3.00	0.71	3.12	0.72
			23	2.00	0.61	2.60	0.65	2.72	0.68	2.78	0.69	2.83	0.71	2.95	0.72	3.07	0.73
			25	2.00	0.63	2.55	0.67	2.67	0.70	2.73	0.71	2.79	0.72	2.91	0.74	3.02	0.75
			27	2.00	0.65	2.51	0.69	2.62	0.72	2.68	0.73	2.74	0.74	2.86	0.76	2.98	0.76
			29	2.00	0.68	2.46	0.71	2.58	0.74	2.64	0.75	2.69	0.76	2.81	0.77	2.93	0.78
			31	2.00	0.70	2.42	0.73	2.53	0.76	2.59	0.77	2.65	0.78	2.76	0.79	2.88	0.79
			33	2.00	0.72	2.37	0.76	2.49	0.78	2.54	0.79	2.60	0.80	2.72	0.81	2.83	0.81
			35	2.00	0.75	2.33	0.78	2.44	0.80	2.50	0.80	2.56	0.82	2.67	0.83	2.78	0.83
			37	2.00	0.77	2.29	0.80	2.40	0.82	2.45	0.83	2.51	0.84	2.62	0.84	2.74	0.84
			39	2.00	0.80	2.24	0.83	2.35	0.85	2.41	0.85	2.46	0.86	2.58	0.86	2.69	0.86
			42	1.98	0.84	2.18	0.86	2.29	0.88	2.34	0.88	2.40	0.89	2.51	0.89	2.62	0.88
			44	1.88	0.86	2.13	0.89	2.24	0.90	2.30	0.91	2.35	0.91	2.46	0.91	2.57	0.90
			46	1.83	0.89	2.09	0.91	2.20	0.93	2.25	0.93	2.30	0.93	2.41	0.93	2.53	0.92
3500	3500	35%	10	2.80	0.62	4.06	0.69	4.23	0.75	4.31	0.77	4.40	0.80	4.57	0.84	4.74	0.87
			12	2.80	0.65	3.99	0.71	4.16	0.77	4.25	0.80	4.33	0.82	4.50	0.86	4.68	0.88
			14	2.80	0.68	3.93	0.74	4.10	0.80	4.18	0.82	4.26	0.84	4.44	0.88	4.61	0.90
			16	2.80	0.70	3.86	0.77	4.03	0.82	4.11	0.84	4.20	0.86	4.37	0.90	4.54	0.92
			18	2.80	0.73	3.80	0.79	3.96	0.84	4.05	0.87	4.13	0.89	4.30	0.92	4.47	0.94
			20	2.80	0.76	3.73	0.82	3.90	0.87	3.98	0.89	4.07	0.91	4.23	0.94	4.40	0.95
			21	2.80	0.78	3.70	0.84	3.87	0.88	3.95	0.90	4.03	0.92	4.20	0.95	4.37	0.96
			23	2.80	0.81	3.64	0.86	3.80	0.91	3.89	0.93	3.97	0.94	4.13	0.97	4.30	0.98
			25	2.80	0.84	3.58	0.89	3.74	0.93	3.82	0.95	3.90	0.97	4.07	0.99	4.23	1.00
			27	2.80	0.87	3.51	0.92	3.67	0.96	3.76	0.98	3.84	0.99	4.00	1.01	4.17	1.02
			29	2.80	0.90	3.45	0.95	3.61	0.99	3.69	1.00	3.77	1.02	3.93	1.03	4.10	1.04
			31	2.80	0.94	3.39	0.98	3.55	1.02	3.63	1.03	3.71	1.04	3.87	1.06	4.03	1.06
			33	2.80	0.97	3.32	1.01	3.48	1.04	3.56	1.06	3.64	1.07	3.80	1.08	3.97	1.08
			35	2.80	1.00	3.26	1.04	3.42	1.07	3.50	1.07	3.58	1.09	3.74	1.10	3.90	1.10
			37	2.80	1.03	3.20	1.07	3.36	1.10	3.43	1.11	3.51	1.12	3.67	1.13	3.83	1.13
			39	2.80	1.07	3.14	1.11	3.29	1.13	3.37	1.14	3.45	1.15	3.61	1.15	3.77	1.15
			42	2.77	1.12	3.05	1.15	3.20	1.18	3.28	1.18	3.35	1.19	3.51	1.19	3.67	1.18
			44	2.63	1.16	2.98	1.19	3.14	1.21	3.21	1.21	3.29	1.22	3.45	1.22	3.60	1.21
			46	2.56	1.19	2.92	1.22	3.07	1.24	3.15	1.24	3.23	1.25	3.38	1.24	3.54	1.23
5000	5000	50%	10	4.00	0.87	5.79	0.97	6.04	1.05	6.16	1.09	6.28	1.12	6.53	1.17	6.78	1.21
			12	4.00	0.91	5.70	1.00	5.94	1.08	6.07	1.12	6.19	1.15	6.43	1.20	6.68	1.24
			14	4.00	0.95	5.61	1.04	5.85	1.12	5.97	1.15	6.09	1.18	6.34	1.23	6.58	1.26
			16	4.00	0.99	5.52	1.08	5.76	1.15	5.88	1.18	6.00	1.21	6.24	1.25	6.48	1.29
			18	4.00	1.03	5.43	1.11	5.66	1.18	5.78	1.21	5.90	1.24	6.14	1.28	6.39	1.31
			20	4.00	1.07	5.34	1.15	5.57	1.22	5.69	1.25	5.81	1.27	6.05	1.31	6.29	1.34
			21	4.00	1.09	5.29	1.17	5.53	1.24	5.64	1.27	5.76	1.29	6.00	1.33	6.24	1.35
			23	4.00	1.13	5.20	1.21	5.43	1.27	5.55	1.30	5.67	1.32	5.91	1.36	6.14	1.38
			25	4.00	1.18	5.11	1.25	5.34	1.31	5.46	1.33	5.57	1.36	5.81	1.39	6.05	1.40
			27	4.00	1.22	5.02	1.29	5.25	1.35	5.37	1.37	5.48	1.39	5.72	1.42	5.95	1.43
			29	4.00	1.27	4.93	1.33	5.16	1.39	5.27	1.41	5.39	1.42	5.62	1.45	5.86	1.46
			31	4.00	1.31	4.84	1.38	5.07	1.42	5.18	1.44	5.30	1.46	5.53	1.48	5.76	1.49
			33	4.00	1.36	4.75	1.42	4.98	1.46	5.09	1.48	5.20	1.50	5.43	1.51	5.66	1.52
			35	4.00	1.40	4.66	1.46	4.89	1.50	5.00	1.50	5.11	1.53	5.34	1.55	5.57	1.55
			37	4.00	1.45	4.57	1.50	4.79	1.54	4.91	1.56	5.02	1.57	5.25	1.58	5.47	1.58
			39	4.00	1.50	4.48	1.55	4.70	1.59	4.82	1.60	4.93	1.61	5.15	1.62	5.38	1.61
			42	3.95	1.57	4.35	1.62	4.57	1.65	4.68	1.66	4.79	1.67	5.01	1.67	5.24	1.66
			44	3.75	1.62	4.26	1.66	4.48	1.69	4.59	1.70	4.70	1.71	4.92	1.71	5.14	1.69
			46	3.65	1.67	4.18	1.71	4.39	1.73	4.50	1.74	4.61	1.75	4.83	1.74	5.05	1.73

* All figures comply with EN14511

1. Cooling capacity is based on 27°CDB / 19°CWB (indoor temperature), 35°CDB (outdoor temperature).
2. Heating capacity is based on 20°CDB (indoor temperature), 7°CDB/6°CWB (outdoor temperature).
3. Capacities are based on the following conditions : - Corresponding refrigerant piping length : 5m / - Level difference : 0m
4. The total ability of connected a indoor unit is up to 17.3kW
5. It is impossible to connect the indoor unit for one room only.
6. This data is reference data for temperature capacity trend.

7 AJ100FCJ5EH

1) Cooling

COOLING

Combination (Capacity Index)					Combination (Total)	Combination (%)	Outdoor Temperature (°C, DB)	Indoor Temperature(°C, WB)													
								14		16		18		19		20		22		24	
								TC(kW)	PI(kW)	TC(kW)	PI(kW)	TC(kW)	PI(kW)	TC(kW)	PI(kW)	TC(kW)	PI(kW)	TC(kW)	PI(kW)	TC(kW)	PI(kW)
6800					6800	68%	10	5.44	1.26	7.88	1.40	8.21	1.53	8.38	1.58	8.54	1.63	8.88	1.71	9.22	1.77
							12	5.44	1.32	7.75	1.46	8.08	1.57	8.25	1.62	8.42	1.67	8.75	1.74	9.08	1.80
							14	5.44	1.38	7.63	1.51	7.96	1.62	8.12	1.67	8.29	1.71	8.62	1.78	8.95	1.83
							16	5.44	1.44	7.50	1.56	7.83	1.67	7.99	1.72	8.16	1.76	8.49	1.82	8.82	1.87
							18	5.44	1.50	7.38	1.62	7.70	1.72	7.87	1.77	8.03	1.80	8.36	1.86	8.69	1.91
							20	5.44	1.56	7.26	1.67	7.58	1.77	7.74	1.81	7.90	1.85	8.23	1.91	8.55	1.94
							21	5.44	1.59	7.19	1.70	7.51	1.80	7.68	1.84	7.84	1.87	8.16	1.93	8.49	1.96
							23	5.44	1.65	7.07	1.76	7.39	1.85	7.55	1.89	7.71	1.92	8.03	1.97	8.36	2.00
							25	5.44	1.71	6.95	1.82	7.26	1.90	7.42	1.94	7.58	1.97	7.90	2.01	8.22	2.04
							27	5.44	1.78	6.83	1.88	7.14	1.96	7.30	1.99	7.46	2.02	7.77	2.06	8.09	2.08
							29	5.44	1.84	6.70	1.94	7.01	2.01	7.17	2.05	7.33	2.07	7.64	2.11	7.96	2.12
							31	5.44	1.91	6.58	2.00	6.89	2.07	7.05	2.10	7.20	2.12	7.52	2.15	7.83	2.16
							33	5.44	1.97	6.46	2.06	6.77	2.13	6.92	2.15	7.08	2.17	7.39	2.20	7.70	2.21
							35	5.44	2.04	6.34	2.12	6.64	2.19	6.80	2.18	6.95	2.23	7.26	2.25	7.57	2.25
							37	5.44	2.11	6.22	2.19	6.52	2.24	6.67	2.27	6.83	2.28	7.13	2.30	7.45	2.29
							39	5.44	2.18	6.10	2.25	6.40	2.30	6.55	2.32	6.70	2.34	7.01	2.35	7.32	2.34
							42	5.37	2.28	5.92	2.35	6.22	2.40	6.37	2.41	6.52	2.42	6.82	2.43	7.12	2.41
							44	5.10	2.35	5.80	2.42	6.09	2.46	6.24	2.47	6.39	2.48	6.69	2.48	7.00	2.46
							46	4.96	2.43	5.68	2.48	5.97	2.52	6.12	2.53	6.27	2.54	6.57	2.53	6.87	2.51
2000	2000				4000	40%	10	3.53	0.89	4.99	0.91	5.08	0.93	5.14	0.94	5.20	0.95	5.35	0.97	5.52	0.99
							12	3.53	0.91	4.85	0.93	4.95	0.95	5.01	0.96	5.08	0.97	5.23	0.99	5.41	1.01
							14	3.53	0.93	4.72	0.95	4.83	0.97	4.89	0.98	4.96	0.99	5.12	1.01	5.31	1.03
							16	3.53	0.95	4.60	0.98	4.71	1.00	4.78	1.01	4.85	1.02	5.02	1.04	5.21	1.06
							18	3.53	0.98	4.48	1.00	4.60	1.02	4.67	1.03	4.75	1.04	4.92	1.06	5.12	1.08
							20	3.53	1.00	4.36	1.02	4.49	1.05	4.57	1.06	4.65	1.07	4.83	1.09	5.03	1.11
							21	3.53	1.02	4.31	1.04	4.44	1.06	4.52	1.07	4.60	1.08	4.78	1.10	4.99	1.12
							23	3.53	1.04	4.20	1.06	4.34	1.08	4.42	1.09	4.51	1.10	4.70	1.12	4.91	1.14
							25	3.53	1.07	4.10	1.09	4.25	1.11	4.33	1.12	4.42	1.13	4.62	1.15	4.84	1.17
							27	3.53	1.10	4.01	1.12	4.16	1.14	4.25	1.15	4.34	1.16	4.55	1.18	4.78	1.20
							29	3.53	1.12	3.92	1.14	4.08	1.17	4.17	1.18	4.27	1.19	4.48	1.21	4.72	1.22
							31	3.53	1.15	3.84	1.17	4.01	1.19	4.10	1.20	4.20	1.21	4.42	1.23	4.66	1.25
							33	3.53	1.18	3.76	1.20	3.94	1.22	4.03	1.23	4.13	1.24	4.36	1.26	4.61	1.28
							35	3.53	1.21	3.69	1.23	3.87	1.25	4.00	1.26	4.08	1.27	4.31	1.29	4.57	1.31
							37	3.53	1.24	3.62	1.26	3.81	1.28	3.91	1.29	4.02	1.30	4.26	1.32	4.53	1.34
							39	3.53	1.27	3.56	1.29	3.76	1.31	3.86	1.32	3.98	1.33	4.22	1.35	4.49	1.37
							42	3.53	1.32	3.48	1.34	3.69	1.36	3.80	1.37	3.92	1.38	4.17	1.40	4.46	1.42
							44	3.53	1.35	3.44	1.38	3.65	1.40	3.76	1.41	3.89	1.41	4.15	1.43	4.44	1.45
							46	3.53	1.39	3.39	1.41	3.61	1.43	3.73	1.44	3.86	1.45	4.13	1.47	4.42	1.48
2000	2500				4500	45%	10	3.98	0.98	5.61	1.01	5.72	1.03	5.78	1.04	5.85	1.06	6.01	1.08	6.21	1.10
							12	3.98	1.01	5.46	1.03	5.57	1.06	5.64	1.07	5.71	1.08	5.89	1.10	6.09	1.12
							14	3.98	1.03	5.31	1.06	5.43	1.08	5.50	1.09	5.58	1.11	5.76	1.13	5.97	1.15
							16	3.98	1.06	5.17	1.08	5.30	1.11	5.38	1.12	5.46	1.13	5.65	1.15	5.86	1.17
							18	3.98	1.09	5.04	1.11	5.17	1.13	5.25	1.15	5.34	1.16	5.53	1.18	5.76	1.20
							20	3.98	1.11	4.91	1.14	5.05	1.16	5.14	1.17	5.23	1.19	5.43	1.21	5.66	1.23
							21	3.98	1.13	4.85	1.15	5.00	1.18	5.08	1.19	5.17	1.20	5.38	1.22	5.62	1.24
							23	3.98	1.16	4.73	1.18	4.89	1.21	4.98	1.22	5.07	1.23	5.29	1.25	5.53	1.27
							25	3.98	1.19	4.62	1.21	4.78	1.23	4.87	1.25	4.98	1.26	5.20	1.28	5.45	1.30
							27	3.98	1.22	4.51	1.24	4.68	1.26	4.78	1.28	4.88	1.29	5.11	1.31	5.37	1.33
							29	3.98	1.25	4.41	1.27	4.59	1.30	4.69	1.31	4.80	1.32	5.04	1.34	5.30	1.36
							31	3.98	1.28	4.32	1.30	4.51	1.33	4.61	1.34	4.72	1.35	4.97	1.37	5.24	1.39
							33	3.98	1.31	4.23	1.34	4.43	1.36	4.54	1.37	4.65	1.38	4.90	1.40	5.19	1.42
							35	3.98	1.35	4.15	1.37	4.35	1.39	4.50	1.40	4.59	1.41	4.85	1.44	5.14	1.46
							37	3.98	1.38	4.08	1.40	4.29	1.43	4.40	1.44	4.53	1.45	4.80	1.47	5.09	1.49
							39	3.98	1.41	4.01	1.44	4.23	1.46	4.35	1.47	4.48	1.48	4.75	1.50	5.06	1.52
							42	3.98	1.47	3.92	1.49	4.15	1.51	4.27	1.52	4.41	1.54	4.70	1.56	5.01	1.58
							44	3.98	1.50	3.87	1.53	4.10	1.55	4.23	1.56	4.37	1.57	4.67	1.59	4.99	1.61
							46	3.98	1.54	3.82	1.57	4.07	1.59	4.20	1.60	4.34	1.61	4.64	1.63	4.98	1.65
2000	3500				5500	55%	10	4.86	1.23	6.86	1.26	6.99	1.29	7.06	1.31	7.15	1.32	7.35	1.35	7.59	1.37
							12	4.86	1.26	6.67	1.29	6.81	1.32	6.89	1.34	6.98	1.35	7.19	1.38	7.44	1.40
							14	4.86	1.29	6.49	1.32	6.64	1.35	6.73	1.37	6.82	1.38	7.04	1.41	7.30	1.44
							16	4.86	1.32	6.32	1.36	6.48	1.39	6.57	1.40	6.67	1.41	6.90	1.44	7.16	1.47
							18	4.86	1.36	6.16	1.39	6.32	1.42	6.42	1.43	6.53	1.45	6.76	1.47	7.04	1.50
							20	4.86	1.39	6.00	1.42	6.18	1.45	6.28	1.47	6.39	1.48	6.64	1.51	6.92	1.54
							21	4.86	1.41	5.92	1.44	6.11	1.47	6.21	1.48	6.32	1.50	6.58	1.53	6.86	1.55
							23	4.86	1.45	5.78	1.48	5.97	1.51	6.08	1.52	6.20	1.53	6.46	1.56	6.76	1.59
							25	4.86	1.48	5.64	1.51	5.84	1.54	5.96	1.56	6.08	1.57	6.35	1.60	6.66	1.62
							27	4.86	1.52	5.51	1.55	5.72	1.58	5.84	1.59	5.97	1.61	6.25	1.64	6.57	1.66
							29	4.86	1.56	5.39	1.59	5.61	1.62	5.74	1.63	5.87	1.65	6.16	1.67	6.48	1.70
							31	4.86	1.60	5.28	1.63	5.51	1.66	5.64	1.67	5.77	1.69	6.07	1.71	6.41	1.74
							33	4.86	1.64	5.17	1.67	5.41	1.70	5.54	1.71	5.69	1.73	5.99	1.75	6.34	1.78
							35	4.86	1.68	5.07	1.71	5.32	1.74	5.50	1.75	5.61	1.77	5.92	1.79	6.28	1.82
							37	4.86	1.72	4.98	1.75	5.24	1.78	5.38	1.80	5.53	1.81	5.86	1.84	6.23	1.86
							39	4.86	1.77	4.90	1.80	5.17	1.83	5.31	1.84	5.47	1.85	5.81	1.88	6.18	1.90
							42	4.86	1.83	4.79	1.86	5.07	1.89	5.22	1.91	5.39	1.92	5.74	1.95	6.13	1.97
							44	4.86	1.88	4.72	1.91	5.02	1.94	5.17	1.95	5.34	1.96	5.70	1.99	6.10	2.02
							46	4.86	1.93	4.67	1.96	4.97	1.98	5.13	2.00	5.30	2.01	5.68	2.04	6.08	2.06

* All figures comply with EN14511

1. Cooling capacity is based on 27°CDB / 19°CWB (indoor temperature), 35°CDB (outdoor temperature).
2. Heating capacity is based on 20°CDB (indoor temperature), 7°CDB/6°CWB (outdoor temperature).
3. Capacities are based on the following conditions : - Corresponding refrigerant piping length : 5m / - Level difference : 0m
4. The total ability of connected a indoor unit is up to 17.3kW
5. It is impossible to connect the indoor unit for one room only.
6. This data is reference data for temperature capacity trend.

1) Cooling

COOLING

Combination (Capacity Index)					Combination (Total)	Combination (%)	Outdoor Temperature (°C, DB)	Indoor Temperature(°C, WB)													
								14		16		18		19		20		22		24	
								TC(kW)	PI(kW)	TC(kW)	PI(kW)	TC(kW)	PI(kW)	TC(kW)	PI(kW)	TC(kW)	PI(kW)	TC(kW)	PI(kW)	TC(kW)	PI(kW)
2000	5000				7000	70%	10	6.19	1.54	8.73	1.58	8.89	1.62	8.99	1.63	9.10	1.65	9.36	1.69	9.66	1.72
							12	6.19	1.58	8.49	1.62	8.67	1.65	8.77	1.67	8.89	1.69	9.15	1.72	9.47	1.76
							14	6.19	1.62	8.26	1.66	8.45	1.69	8.56	1.71	8.68	1.73	8.96	1.76	9.29	1.80
							16	6.19	1.66	8.04	1.70	8.24	1.73	8.36	1.75	8.49	1.77	8.78	1.80	9.12	1.84
							18	6.19	1.70	7.83	1.74	8.05	1.78	8.17	1.79	8.31	1.81	8.61	1.85	8.96	1.88
							20	6.19	1.74	7.64	1.78	7.86	1.82	7.99	1.84	8.13	1.85	8.45	1.89	8.81	1.92
							21	6.19	1.77	7.54	1.80	7.77	1.84	7.90	1.86	8.05	1.88	8.37	1.91	8.74	1.94
							23	6.19	1.81	7.36	1.85	7.60	1.89	7.74	1.90	7.89	1.92	8.22	1.95	8.60	1.99
							25	6.19	1.86	7.18	1.89	7.44	1.93	7.58	1.95	7.74	1.97	8.08	2.00	8.47	2.03
							27	6.19	1.90	7.02	1.94	7.29	1.98	7.44	2.00	7.60	2.01	7.96	2.05	8.36	2.08
							29	6.19	1.95	6.86	1.99	7.14	2.03	7.30	2.04	7.47	2.06	7.84	2.09	8.25	2.13
							31	6.19	2.00	6.72	2.04	7.01	2.08	7.17	2.09	7.35	2.11	7.73	2.14	8.15	2.18
							33	6.19	2.05	6.58	2.09	6.89	2.13	7.06	2.14	7.24	2.16	7.63	2.19	8.07	2.23
							35	6.19	2.11	6.46	2.14	6.77	2.18	7.00	2.19	7.13	2.21	7.54	2.25	7.99	2.28
							37	6.19	2.16	6.34	2.20	6.67	2.23	6.85	2.25	7.04	2.27	7.46	2.30	7.92	2.33
							39	6.19	2.21	6.24	2.25	6.58	2.28	6.76	2.30	6.96	2.32	7.39	2.35	7.87	2.38
							42	6.19	2.30	6.09	2.33	6.45	2.37	6.65	2.39	6.86	2.40	7.30	2.43	7.80	2.47
							44	6.19	2.35	6.01	2.39	6.38	2.43	6.59	2.44	6.80	2.46	7.26	2.49	7.76	2.52
							46	6.19	2.41	5.94	2.45	6.32	2.48	6.53	2.50	6.75	2.52	7.22	2.55	7.74	2.58
2000	6800				8800	88%	10	7.13	1.79	10.06	1.84	10.25	1.88	10.37	1.90	10.49	1.92	10.79	1.96	11.13	2.00
							12	7.13	1.84	9.79	1.88	9.99	1.93	10.11	1.95	10.25	1.97	10.55	2.01	10.91	2.05
							14	7.13	1.88	9.52	1.93	9.74	1.97	9.87	1.99	10.01	2.01	10.33	2.05	10.71	2.09
							16	7.13	1.93	9.27	1.98	9.50	2.02	9.64	2.04	9.79	2.06	10.12	2.10	10.51	2.14
							18	7.13	1.98	9.03	2.02	9.28	2.07	9.42	2.09	9.58	2.11	9.93	2.15	10.33	2.19
							20	7.13	2.03	8.80	2.07	9.06	2.12	9.21	2.14	9.38	2.16	9.74	2.20	10.15	2.24
							21	7.13	2.06	8.69	2.10	8.96	2.14	9.11	2.16	9.28	2.18	9.65	2.22	10.07	2.26
							23	7.13	2.11	8.48	2.15	8.76	2.19	8.92	2.22	9.09	2.24	9.48	2.28	9.91	2.31
							25	7.13	2.16	8.28	2.21	8.58	2.25	8.74	2.27	8.92	2.29	9.32	2.33	9.77	2.37
							27	7.13	2.22	8.09	2.26	8.40	2.30	8.57	2.32	8.76	2.34	9.17	2.38	9.64	2.42
							29	7.13	2.27	7.91	2.32	8.24	2.36	8.42	2.38	8.61	2.40	9.04	2.44	9.51	2.48
							31	7.13	2.33	7.75	2.37	8.08	2.42	8.27	2.44	8.47	2.46	8.91	2.50	9.40	2.53
							33	7.13	2.39	7.59	2.43	7.94	2.48	8.13	2.50	8.34	2.52	8.80	2.55	9.30	2.59
							35	7.13	2.45	7.44	2.49	7.81	2.54	8.07	2.55	8.23	2.58	8.69	2.61	9.21	2.65
							37	7.13	2.51	7.31	2.56	7.69	2.60	7.90	2.62	8.12	2.64	8.60	2.68	9.13	2.71
							39	7.13	2.58	7.19	2.62	7.58	2.66	7.80	2.68	8.03	2.70	8.52	2.74	9.07	2.78
							42	7.13	2.67	7.03	2.72	7.44	2.76	7.67	2.78	7.90	2.80	8.42	2.83	8.99	2.87
							44	7.13	2.74	6.93	2.78	7.36	2.82	7.59	2.84	7.84	2.86	8.37	2.90	8.95	2.94
							46	7.13	2.81	6.85	2.85	7.29	2.89	7.53	2.91	7.78	2.93	8.33	2.97	8.92	3.00
2500	2500				5000	50%	10	4.42	1.12	6.23	1.15	6.35	1.18	6.42	1.19	6.50	1.21	6.68	1.23	6.90	1.26
							12	4.42	1.15	6.06	1.18	6.19	1.21	6.27	1.22	6.35	1.23	6.54	1.26	6.76	1.28
							14	4.42	1.18	5.90	1.21	6.04	1.24	6.12	1.25	6.20	1.26	6.40	1.29	6.63	1.31
							16	4.42	1.21	5.75	1.24	5.89	1.27	5.97	1.28	6.06	1.29	6.27	1.32	6.51	1.34
							18	4.42	1.24	5.60	1.27	5.75	1.30	5.84	1.31	5.93	1.32	6.15	1.35	6.40	1.37
							20	4.42	1.27	5.45	1.30	5.62	1.33	5.71	1.34	5.81	1.35	6.03	1.38	6.29	1.40
							21	4.42	1.29	5.39	1.32	5.55	1.34	5.65	1.36	5.75	1.37	5.98	1.40	6.24	1.42
							23	4.42	1.32	5.25	1.35	5.43	1.38	5.53	1.39	5.63	1.40	5.87	1.43	6.14	1.45
							25	4.42	1.36	5.13	1.38	5.31	1.41	5.42	1.42	5.53	1.44	5.77	1.46	6.05	1.49
							27	4.42	1.39	5.01	1.42	5.20	1.45	5.31	1.46	5.43	1.47	5.68	1.50	5.97	1.52
							29	4.42	1.43	4.90	1.45	5.10	1.48	5.21	1.49	5.33	1.51	5.60	1.53	5.89	1.55
							31	4.42	1.46	4.80	1.49	5.01	1.52	5.12	1.53	5.25	1.54	5.52	1.57	5.82	1.59
							33	4.42	1.50	4.70	1.53	4.92	1.55	5.04	1.57	5.17	1.58	5.45	1.60	5.76	1.63
							35	4.42	1.54	4.61	1.57	4.84	1.59	5.00	1.60	5.10	1.62	5.39	1.64	5.71	1.66
							37	4.42	1.58	4.53	1.60	4.76	1.63	4.89	1.64	5.03	1.65	5.33	1.68	5.66	1.70
							39	4.42	1.62	4.45	1.64	4.70	1.67	4.83	1.68	4.97	1.69	5.28	1.72	5.62	1.74
							42	4.42	1.68	4.35	1.70	4.61	1.73	4.75	1.74	4.90	1.75	5.22	1.78	5.57	1.80
							44	4.42	1.72	4.30	1.75	4.56	1.77	4.70	1.78	4.86	1.80	5.18	1.82	5.55	1.84
							46	4.42	1.76	4.24	1.79	4.52	1.81	4.67	1.83	4.82	1.84	5.16	1.86	5.53	1.89
2500	3500				6000	60%	10	5.30	1.29	7.48	1.33	7.62	1.36	7.71	1.37	7.80	1.39	8.02	1.42	8.28	1.45
							12	5.30	1.33	7.28	1.36	7.43	1.39	7.52	1.40	7.62	1.42	7.85	1.45	8.11	1.48
							14	5.30	1.36	7.08	1.39	7.24	1.42	7.34	1.44	7.44	1.45	7.68	1.48	7.96	1.51
							16	5.30	1.39	6.89	1.43	7.07	1.46	7.17	1.47	7.28	1.49	7.53	1.52	7.81	1.54
							18	5.30	1.43	6.72	1.46	6.90	1.49	7.00	1.51	7.12	1.52	7.38	1.55	7.68	1.58
							20	5.30	1.46	6.55	1.50	6.74	1.53	6.85	1.54	6.97	1.56	7.24	1.59	7.55	1.61
							21	5.30	1.48	6.46	1.52	6.66	1.55	6.78	1.56	6.90	1.58	7.17	1.60	7.49	1.63
							23	5.30	1.52	6.31	1.55	6.51	1.58	6.63	1.60	6.76	1.61	7.05	1.64	7.37	1.67
							25	5.30	1.56	6.16	1.59	6.38	1.62	6.50	1.64	6.63	1.65	6.93	1.68	7.26	1.71
							27	5.30	1.60	6.02	1.63	6.25	1.66	6.37	1.68	6.51	1.69	6.82	1.72	7.16	1.75
							29	5.30	1.64	5.88	1.67	6.12	1.70	6.26	1.72	6.40	1.73	6.72	1.76	7.07	1.79
							31	5.30	1.68	5.76	1.71	6.01	1.74	6.15	1.76	6.30	1.77	6.62	1.80	6.99	1.83
							33	5.30	1.72	5.64	1.76	5.90	1.79	6.05	1.80	6.20	1.82	6.54	1.84	6.92	1.87
							35	5.30	1.77	5.54	1.80	5.81	1.83	6.00	1.84	6.12	1.86	6.46	1.89	6.85	1.91
							37	5.30	1.81	5.44	1.84	5.72	1.87	5.87	1.89	6.04	1.90	6.39	1.93	6.79	1.96
							39	5.30	1.86	5.34	1.89	5.64	1.92	5.80	1.93	5.97	1.95	6.34	1.98	6.74	2.00
							42	5.30	1.93	5.22	1.96	5.53	1.99	5.70	2.00	5.88	2.02	6.26	2.05	6.68	2.07
							44	5.30	1.98	5.15	2.01	5.47	2.04	5.64	2.05	5.83	2.07	6.22	2.09	6.65	2.12
							46	5.30	2.03	5.09	2.06	5.42	2.09	5.60	2.10	5.79	2.11	6.19	2.14	6.63	2.17

* All figures comply with EN14511

1. Cooling capacity is based on 27°CDB / 19°CWB (indoor temperature), 35°CDB (outdoor temperature).
2. Heating capacity is based on 20°CDB (indoor temperature), 7°CDB/6°CWB (outdoor temperature).
3. Capacities are based on the following conditions : - Corresponding refrigerant piping length : 5m / - Level difference : 0m
4. The total ability of connected a indoor unit is up to 17.3kW
5. It is impossible to connect the indoor unit for one room only.
6. This data is reference data for temperature capacity trend.

7 AJ100FCJ5EH

1) Cooling

COOLING

Combination (Capacity Index)					Combination (Total)	Combination (%)	Outdoor Temperature (°C, DB)	Indoor Temperature(°C, WB)													
								14		16		18		19		20		22		24	
								TC(kW)	PI(kW)	TC(kW)	PI(kW)	TC(kW)	PI(kW)	TC(kW)	PI(kW)	TC(kW)	PI(kW)	TC(kW)	PI(kW)	TC(kW)	PI(kW)
2500	5000				7500	75%	10	6.63	1.64	9.35	1.69	9.53	1.73	9.63	1.75	9.75	1.76	10.02	1.80	10.34	1.84
							12	6.63	1.69	9.10	1.73	9.29	1.77	9.40	1.79	9.52	1.81	9.81	1.84	10.14	1.88
							14	6.63	1.73	8.85	1.77	9.05	1.81	9.17	1.83	9.30	1.85	9.60	1.88	9.95	1.92
							16	6.63	1.77	8.62	1.81	8.83	1.85	8.96	1.87	9.10	1.89	9.41	1.93	9.77	1.96
							18	6.63	1.82	8.39	1.86	8.62	1.90	8.76	1.92	8.90	1.94	9.22	1.97	9.60	2.01
							20	6.63	1.86	8.18	1.90	8.42	1.94	8.56	1.96	8.71	1.98	9.05	2.02	9.44	2.05
							21	6.63	1.89	8.08	1.93	8.33	1.97	8.47	1.99	8.62	2.00	8.97	2.04	9.36	2.08
							23	6.63	1.93	7.88	1.98	8.14	2.01	8.29	2.03	8.45	2.05	8.81	2.09	9.21	2.12
							25	6.63	1.98	7.70	2.02	7.97	2.06	8.12	2.08	8.29	2.10	8.66	2.14	9.08	2.17
							27	6.63	2.03	7.52	2.07	7.81	2.11	7.97	2.13	8.14	2.15	8.52	2.19	8.95	2.22
							29	6.63	2.09	7.35	2.13	7.65	2.17	7.82	2.18	8.00	2.20	8.40	2.24	8.84	2.27
							31	6.63	2.14	7.20	2.18	7.51	2.22	7.69	2.24	7.87	2.25	8.28	2.29	8.74	2.33
							33	6.63	2.19	7.05	2.23	7.38	2.27	7.56	2.29	7.75	2.31	8.17	2.34	8.64	2.38
							35	6.63	2.25	6.92	2.29	7.26	2.33	7.50	2.34	7.64	2.36	8.08	2.40	8.56	2.43
							37	6.63	2.31	6.79	2.35	7.15	2.38	7.34	2.40	7.55	2.42	7.99	2.46	8.49	2.49
							39	6.63	2.36	6.68	2.40	7.05	2.44	7.25	2.46	7.46	2.48	7.92	2.51	8.43	2.55
							42	6.63	2.45	6.53	2.49	6.91	2.53	7.12	2.55	7.35	2.57	7.83	2.60	8.35	2.63
							44	6.63	2.51	6.44	2.55	6.84	2.59	7.06	2.61	7.28	2.63	7.78	2.66	8.32	2.70
							46	6.63	2.58	6.37	2.62	6.78	2.65	7.00	2.67	7.23	2.69	7.74	2.72	8.29	2.76
2500	6800				9300	93%	10	7.20	1.79	10.16	1.84	10.35	1.88	10.47	1.90	10.60	1.92	10.89	1.96	11.24	2.00
							12	7.20	1.84	9.88	1.88	10.09	1.93	10.21	1.95	10.35	1.97	10.66	2.01	11.02	2.05
							14	7.20	1.88	9.62	1.93	9.84	1.97	9.97	1.99	10.11	2.01	10.44	2.05	10.81	2.09
							16	7.20	1.93	9.36	1.98	9.60	2.02	9.74	2.04	9.89	2.06	10.22	2.10	10.61	2.14
							18	7.20	1.98	9.12	2.02	9.37	2.07	9.51	2.09	9.67	2.11	10.02	2.15	10.43	2.19
							20	7.20	2.03	8.89	2.07	9.15	2.12	9.30	2.14	9.47	2.16	9.83	2.20	10.25	2.24
							21	7.20	2.06	8.78	2.10	9.05	2.14	9.20	2.16	9.37	2.18	9.74	2.22	10.17	2.26
							23	7.20	2.11	8.57	2.15	8.85	2.19	9.01	2.22	9.19	2.24	9.57	2.28	10.01	2.31
							25	7.20	2.16	8.36	2.21	8.66	2.25	8.83	2.27	9.01	2.29	9.41	2.33	9.87	2.37
							27	7.20	2.22	8.17	2.26	8.48	2.30	8.66	2.32	8.85	2.34	9.26	2.38	9.73	2.42
							29	7.20	2.27	7.99	2.32	8.32	2.36	8.50	2.38	8.69	2.40	9.12	2.44	9.61	2.48
							31	7.20	2.33	7.82	2.37	8.16	2.42	8.35	2.44	8.55	2.46	9.00	2.50	9.49	2.53
							33	7.20	2.39	7.66	2.43	8.02	2.48	8.22	2.50	8.42	2.52	8.88	2.55	9.39	2.59
							35	7.20	2.45	7.52	2.49	7.89	2.54	8.15	2.55	8.31	2.58	8.78	2.61	9.30	2.65
							37	7.20	2.51	7.38	2.56	7.77	2.60	7.98	2.62	8.20	2.64	8.69	2.68	9.22	2.71
							39	7.20	2.58	7.26	2.62	7.66	2.66	7.87	2.68	8.10	2.70	8.61	2.74	9.16	2.78
							42	7.20	2.67	7.10	2.72	7.51	2.76	7.74	2.78	7.98	2.80	8.50	2.83	9.08	2.87
							44	7.20	2.74	7.00	2.78	7.43	2.82	7.67	2.84	7.92	2.86	8.45	2.90	9.04	2.94
							46	7.20	2.81	6.92	2.85	7.36	2.89	7.60	2.91	7.86	2.93	8.41	2.97	9.01	3.00
3500	3500				7000	70%	10	6.19	1.50	8.73	1.53	8.89	1.57	8.99	1.59	9.10	1.61	9.36	1.64	9.66	1.67
							12	6.19	1.53	8.49	1.57	8.67	1.61	8.77	1.63	8.89	1.64	9.15	1.68	9.47	1.71
							14	6.19	1.57	8.26	1.61	8.45	1.65	8.56	1.66	8.68	1.68	8.96	1.72	9.29	1.75
							16	6.19	1.61	8.04	1.65	8.24	1.69	8.36	1.70	8.49	1.72	8.78	1.75	9.12	1.79
							18	6.19	1.65	7.83	1.69	8.05	1.73	8.17	1.74	8.31	1.76	8.61	1.79	8.96	1.83
							20	6.19	1.70	7.64	1.73	7.86	1.77	7.99	1.79	8.13	1.80	8.45	1.84	8.81	1.87
							21	6.19	1.72	7.54	1.75	7.77	1.79	7.90	1.81	8.05	1.82	8.37	1.86	8.74	1.89
							23	6.19	1.76	7.36	1.80	7.60	1.83	7.74	1.85	7.89	1.87	8.22	1.90	8.60	1.93
							25	6.19	1.81	7.18	1.84	7.44	1.88	7.58	1.90	7.74	1.91	8.08	1.95	8.47	1.98
							27	6.19	1.85	7.02	1.89	7.29	1.92	7.44	1.94	7.60	1.96	7.96	1.99	8.36	2.02
							29	6.19	1.90	6.86	1.94	7.14	1.97	7.30	1.99	7.47	2.00	7.84	2.04	8.25	2.07
							31	6.19	1.95	6.72	1.98	7.01	2.02	7.17	2.04	7.35	2.05	7.73	2.09	8.15	2.12
							33	6.19	2.00	6.58	2.03	6.89	2.07	7.06	2.08	7.24	2.10	7.63	2.13	8.07	2.17
							35	6.19	2.05	6.46	2.08	6.77	2.12	7.00	2.13	7.13	2.15	7.54	2.18	7.99	2.22
							37	6.19	2.10	6.34	2.14	6.67	2.17	6.85	2.19	7.04	2.20	7.46	2.24	7.92	2.27
							39	6.19	2.15	6.24	2.19	6.58	2.22	6.76	2.24	6.96	2.26	7.39	2.29	7.87	2.32
							42	6.19	2.23	6.09	2.27	6.45	2.30	6.65	2.32	6.86	2.34	7.30	2.37	7.80	2.40
							44	6.19	2.29	6.01	2.32	6.38	2.36	6.59	2.38	6.80	2.39	7.26	2.42	7.76	2.45
							46	6.19	2.35	5.94	2.38	6.32	2.42	6.53	2.43	6.75	2.45	7.22	2.48	7.74	2.51
3500	5000				8500	85%	10	7.09	1.75	10.00	1.79	10.19	1.84	10.30	1.86	10.43	1.88	10.72	1.92	11.06	1.96
							12	7.09	1.79	9.73	1.84	9.93	1.88	10.05	1.90	10.18	1.92	10.49	1.96	10.85	2.00
							14	7.09	1.84	9.47	1.88	9.68	1.92	9.81	1.95	9.95	1.97	10.27	2.01	10.64	2.04
							16	7.09	1.89	9.22	1.93	9.45	1.97	9.58	1.99	9.73	2.01	10.06	2.05	10.45	2.09
							18	7.09	1.93	8.98	1.98	9.22	2.02	9.36	2.04	9.52	2.06	9.86	2.10	10.26	2.14
							20	7.09	1.98	8.75	2.03	9.01	2.07	9.16	2.09	9.32	2.11	9.68	2.15	10.09	2.18
							21	7.09	2.01	8.64	2.05	8.90	2.09	9.06	2.11	9.22	2.13	9.59	2.17	10.01	2.21
							23	7.09	2.06	8.43	2.10	8.71	2.14	8.87	2.16	9.04	2.18	9.42	2.22	9.85	2.26
							25	7.09	2.11	8.23	2.15	8.52	2.20	8.69	2.22	8.87	2.24	9.26	2.27	9.71	2.31
							27	7.09	2.16	8.04	2.21	8.35	2.25	8.52	2.27	8.71	2.29	9.12	2.33	9.58	2.36
							29	7.09	2.22	7.86	2.26	8.18	2.30	8.36	2.32	8.56	2.34	8.98	2.38	9.45	2.42
							31	7.09	2.28	7.70	2.32	8.03	2.36	8.22	2.38	8.42	2.40	8.85	2.44	9.34	2.47
							33	7.09	2.33	7.54	2.38	7.89	2.42	8.08	2.44	8.29	2.46	8.74	2.49	9.24	2.53
							35	7.09	2.39	7.40	2.44	7.76	2.48	8.02	2.49	8.17	2.52	8.64	2.55	9.15	2.59
							37	7.09	2.45	7.27	2.50	7.64	2.54	7.85	2.56	8.07	2.58	8.55	2.61	9.08	2.65
							39	7.09	2.52	7.14	2.56	7.53	2.60	7.75	2.62	7.98	2.64	8.47	2.67	9.01	2.71
							42	7.09	2.61	6.98	2.65	7.39	2.69	7.62	2.71	7.86	2.73	8.37	2.77	8.93	2.80
							44	7.09	2.68	6.89	2.72	7.31	2.76	7.55	2.78	7.79	2.80	8.32	2.83	8.89	2.87
							46	7.09	2.74	6.81	2.78	7.25	2.82	7.48	2.84	7.73	2.86	8.28	2.90	8.87	2.93

* All figures comply with EN14511

1. Cooling capacity is based on 27°CDB / 19°CWB (indoor temperature), 35°CDB (outdoor temperature).
2. Heating capacity is based on 20°CDB (indoor temperature), 7°CDB/6°CWB (outdoor temperature).
3. Capacities are based on the following conditions : - Corresponding refrigerant piping length : 5m / - Level difference : 0m
4. The total ability of connected a indoor unit is up to 17.3kW
5. It is impossible to connect the indoor unit for one room only.
6. This data is reference data for temperature capacity trend.

1) Cooling

COOLING

Combination (Capacity Index)					Combination (Total)	Combination (%)	Outdoor Temperature (°C, DB)	Indoor Temperature(°C, WB)													
								14		16		18		19		20		22		24	
								TC(kW)	PI(kW)	TC(kW)	PI(kW)	TC(kW)	PI(kW)	TC(kW)	PI(kW)	TC(kW)	PI(kW)	TC(kW)	PI(kW)	TC(kW)	PI(kW)
3500	6800				10300	103%	10	7.59	1.90	10.71	1.94	10.91	1.99	11.03	2.01	11.17	2.04	11.48	2.08	11.85	2.12
							12	7.59	1.94	10.42	1.99	10.63	2.04	10.76	2.06	10.91	2.08	11.23	2.13	11.62	2.17
							14	7.59	1.99	10.14	2.04	10.37	2.09	10.51	2.11	10.66	2.13	11.00	2.17	11.40	2.22
							16	7.59	2.04	9.87	2.09	10.12	2.14	10.26	2.16	10.42	2.18	10.78	2.22	11.19	2.27
							18	7.59	2.10	9.61	2.14	9.88	2.19	10.03	2.21	10.19	2.23	10.57	2.28	10.99	2.32
							20	7.59	2.15	9.37	2.20	9.65	2.24	9.81	2.26	9.98	2.29	10.37	2.33	10.81	2.37
							21	7.59	2.18	9.25	2.22	9.54	2.27	9.70	2.29	9.88	2.31	10.27	2.35	10.72	2.40
							23	7.59	2.23	9.03	2.28	9.33	2.32	9.50	2.35	9.68	2.37	10.09	2.41	10.55	2.45
							25	7.59	2.29	8.81	2.34	9.13	2.38	9.31	2.40	9.50	2.42	9.92	2.47	10.40	2.51
							27	7.59	2.35	8.61	2.39	8.94	2.44	9.13	2.46	9.32	2.48	9.76	2.52	10.26	2.56
							29	7.59	2.41	8.42	2.45	8.77	2.50	8.96	2.52	9.16	2.54	9.62	2.58	10.13	2.62
							31	7.59	2.47	8.24	2.51	8.60	2.56	8.80	2.58	9.02	2.60	9.48	2.64	10.01	2.68
							33	7.59	2.53	8.08	2.58	8.45	2.62	8.66	2.64	8.88	2.66	9.36	2.71	9.90	2.74
							35	7.59	2.60	7.92	2.64	8.31	2.69	8.59	2.70	8.76	2.73	9.25	2.77	9.81	2.81
							37	7.59	2.66	7.78	2.71	8.19	2.75	8.41	2.77	8.64	2.79	9.16	2.83	9.72	2.87
							39	7.59	2.73	7.65	2.77	8.07	2.82	8.30	2.84	8.54	2.86	9.07	2.90	9.65	2.94
							42	7.59	2.83	7.48	2.88	7.92	2.92	8.16	2.94	8.41	2.96	8.96	3.00	9.57	3.04
							44	7.59	2.90	7.38	2.95	7.83	2.99	8.08	3.01	8.34	3.03	8.91	3.07	9.53	3.11
							46	7.59	2.97	7.29	3.02	7.76	3.06	8.02	3.08	8.28	3.10	8.86	3.14	9.50	3.18
5000	5000				10000	100%	10	7.56	1.86	10.67	1.91	10.87	1.95	10.99	1.98	11.13	2.00	11.44	2.04	11.81	2.08
							12	7.56	1.91	10.38	1.96	10.60	2.00	10.73	2.02	10.87	2.04	11.19	2.09	11.58	2.13
							14	7.56	1.96	10.10	2.00	10.33	2.05	10.47	2.07	10.62	2.09	10.96	2.13	11.36	2.17
							16	7.56	2.01	9.84	2.05	10.08	2.10	10.23	2.12	10.38	2.14	10.74	2.18	11.15	2.22
							18	7.56	2.06	9.58	2.10	9.84	2.15	9.99	2.17	10.16	2.19	10.53	2.23	10.95	2.27
							20	7.56	2.11	9.34	2.16	9.61	2.20	9.77	2.22	9.94	2.24	10.33	2.28	10.77	2.32
							21	7.56	2.14	9.22	2.18	9.50	2.23	9.67	2.25	9.84	2.27	10.23	2.31	10.68	2.35
							23	7.56	2.19	9.00	2.24	9.29	2.28	9.46	2.30	9.65	2.32	10.05	2.36	10.52	2.40
							25	7.56	2.25	8.78	2.29	9.10	2.34	9.27	2.36	9.46	2.38	9.89	2.42	10.36	2.46
							27	7.56	2.30	8.58	2.35	8.91	2.39	9.09	2.41	9.29	2.44	9.73	2.48	10.22	2.52
							29	7.56	2.36	8.39	2.41	8.74	2.45	8.93	2.47	9.13	2.49	9.58	2.53	10.09	2.57
							31	7.56	2.42	8.22	2.47	8.57	2.51	8.77	2.53	8.98	2.55	9.45	2.59	9.97	2.63
							33	7.56	2.48	8.05	2.53	8.42	2.57	8.63	2.59	8.85	2.61	9.33	2.66	9.87	2.69
							35	7.56	2.55	7.90	2.59	8.28	2.64	8.56	2.65	8.72	2.68	9.22	2.72	9.77	2.76
							37	7.56	2.61	7.76	2.66	8.16	2.70	8.38	2.72	8.61	2.74	9.12	2.78	9.69	2.82
							39	7.56	2.68	7.63	2.72	8.04	2.76	8.27	2.79	8.51	2.81	9.04	2.85	9.62	2.88
							42	7.56	2.78	7.45	2.82	7.89	2.87	8.13	2.89	8.38	2.91	8.93	2.95	9.53	2.98
							44	7.56	2.85	7.35	2.89	7.81	2.93	8.05	2.96	8.31	2.98	8.88	3.01	9.49	3.05
							46	7.56	2.92	7.27	2.96	7.73	3.00	7.99	3.03	8.26	3.05	8.83	3.08	9.46	3.12
5000	6800				11800	118%	10	7.79	1.94	11.00	1.99	11.20	2.04	11.33	2.06	11.47	2.08	11.79	2.13	12.17	2.17
							12	7.79	1.99	10.70	2.04	10.92	2.08	11.05	2.11	11.20	2.13	11.53	2.17	11.93	2.22
							14	7.79	2.04	10.41	2.09	10.65	2.13	10.79	2.16	10.94	2.18	11.29	2.22	11.70	2.26
							16	7.79	2.09	10.13	2.14	10.39	2.18	10.54	2.21	10.70	2.23	11.06	2.27	11.49	2.32
							18	7.79	2.14	9.87	2.19	10.14	2.24	10.30	2.26	10.47	2.28	10.85	2.33	11.29	2.37
							20	7.79	2.20	9.62	2.25	9.91	2.29	10.07	2.31	10.25	2.34	10.64	2.38	11.10	2.42
							21	7.79	2.22	9.50	2.27	9.79	2.32	9.96	2.34	10.14	2.36	10.55	2.41	11.01	2.45
							23	7.79	2.28	9.27	2.33	9.58	2.38	9.75	2.40	9.94	2.42	10.36	2.46	10.84	2.50
							25	7.79	2.34	9.05	2.39	9.37	2.43	9.55	2.46	9.75	2.48	10.19	2.52	10.68	2.56
							27	7.79	2.40	8.84	2.45	9.18	2.49	9.37	2.52	9.57	2.54	10.02	2.58	10.53	2.62
							29	7.79	2.46	8.65	2.51	9.00	2.55	9.20	2.58	9.41	2.60	9.88	2.64	10.40	2.68
							31	7.79	2.52	8.47	2.57	8.83	2.62	9.04	2.64	9.26	2.66	9.74	2.70	10.27	2.74
							33	7.79	2.59	8.29	2.63	8.68	2.68	8.89	2.70	9.12	2.72	9.61	2.77	10.17	2.81
							35	7.79	2.65	8.14	2.70	8.54	2.74	8.82	2.76	8.99	2.79	9.50	2.83	10.07	2.87
							37	7.79	2.72	7.99	2.77	8.40	2.81	8.63	2.83	8.87	2.85	9.40	2.90	9.98	2.94
							39	7.79	2.79	7.86	2.83	8.29	2.88	8.52	2.90	8.77	2.92	9.31	2.96	9.91	3.00
							42	7.79	2.89	7.68	2.94	8.13	2.98	8.38	3.01	8.64	3.03	9.20	3.07	9.82	3.11
							44	7.79	2.97	7.58	3.01	8.04	3.06	8.30	3.08	8.57	3.10	9.15	3.14	9.78	3.18
							46	7.79	3.04	7.49	3.09	7.97	3.13	8.23	3.15	8.51	3.17	9.10	3.21	9.75	3.25
6800	6800				13600	136%	10	10.23	1.99	10.63	2.03	11.04	2.07	11.25	2.09	11.46	2.11	11.88	2.15	12.30	2.20
							12	10.05	2.04	10.46	2.08	10.87	2.12	11.07	2.15	11.28	2.17	11.70	2.21	12.13	2.25
							14	9.88	2.09	10.28	2.14	10.69	2.18	10.90	2.20	11.11	2.22	11.53	2.26	11.95	2.31
							16	9.70	2.15	10.10	2.19	10.51	2.23	10.72	2.26	10.93	2.28	11.35	2.32	11.78	2.36
							18	9.52	2.20	9.93	2.25	10.34	2.29	10.55	2.31	10.76	2.33	11.18	2.38	11.61	2.42
							20	9.35	2.26	9.75	2.31	10.17	2.35	10.37	2.37	10.58	2.39	11.01	2.44	11.44	2.48
							21	9.26	2.29	9.67	2.33	10.08	2.38	10.29	2.40	10.50	2.42	10.92	2.47	11.35	2.51
							23	9.09	2.35	9.49	2.39	9.91	2.44	10.11	2.46	10.32	2.48	10.75	2.53	11.18	2.57
							25	8.91	2.41	9.32	2.45	9.73	2.50	9.94	2.52	10.15	2.54	10.58	2.59	11.01	2.63
							27	8.74	2.47	9.14	2.51	9.56	2.56	9.77	2.58	9.98	2.60	10.41	2.65	10.84	2.69
							29	8.56	2.53	8.97	2.58	9.39	2.62	9.60	2.64	9.81	2.67	10.24	2.71	10.67	2.76
							31	8.39	2.59	8.80	2.64	9.21	2.68	9.43	2.71	9.64	2.73	10.07	2.77	10.50	2.82
							33	8.22	2.66	8.63	2.70	9.04	2.75	9.25	2.77	9.47	2.79	9.90	2.84	10.33	2.88
							35	8.04	2.72	8.45	2.77	8.87	2.81	9.10	2.83	9.30	2.86	9.73	2.90	10.16	2.95
							37	7.87	2.79	8.28	2.83	8.70	2.88	8.91	2.90	9.13	2.93	9.56	2.97	9.99	3.02
							39	7.70	2.85	8.11	2.90	8.53	2.95	8.74	2.97	8.96	2.99	9.39	3.04	9.83	3.09
							42	7.44	2.96	7.86	3.00	8.28	3.05	8.49	3.07	8.70	3.10	9.14	3.14	9.57	3.19
							44	7.27	3.02	7.69	3.07	8.11	3.12	8.32	3.14	8.54	3.17	8.97	3.21	9.41	3.26
							46	7.10	3.09	7.52	3.14	7.94	3.19	8.15	3.21	8.37	3.24	8.80	3.28	9.24	3.33

* All figures comply with EN14511

1. Cooling capacity is based on 27°CDB / 19°CWB (indoor temperature), 35°CDB (outdoor temperature).
2. Heating capacity is based on 20°CDB (indoor temperature), 7°CDB/6°CWB (outdoor temperature).
3. Capacities are based on the following conditions : - Corresponding refrigerant piping length : 5m / - Level difference : 0m
4. The total ability of connected a indoor unit is up to 17.3kW
5. It is impossible to connect the indoor unit for one room only.
6. This data is reference data for temperature capacity trend.

7 AJ100FCJ5EH

1) Cooling

COOLING

Combination (Capacity Index)					Combination (Total)	Combination (%)	Outdoor Temperature (°C, DB)	Indoor Temperature(°C, WB)													
								14		16		18		19		20		22		24	
								TC(kW)	PI(kW)	TC(kW)	PI(kW)	TC(kW)	PI(kW)	TC(kW)	PI(kW)	TC(kW)	PI(kW)	TC(kW)	PI(kW)	TC(kW)	PI(kW)
2000	2000	2000			6000	60%	10	5.30	1.31	7.48	1.35	7.62	1.38	7.71	1.39	7.80	1.41	8.02	1.44	8.28	1.47
							12	5.30	1.35	7.28	1.38	7.43	1.41	7.52	1.43	7.62	1.44	7.85	1.47	8.11	1.50
							14	5.30	1.38	7.08	1.41	7.24	1.45	7.34	1.46	7.44	1.48	7.68	1.51	7.96	1.53
							16	5.30	1.42	6.89	1.45	7.07	1.48	7.17	1.50	7.28	1.51	7.53	1.54	7.81	1.57
							18	5.30	1.45	6.72	1.48	6.90	1.52	7.00	1.53	7.12	1.55	7.38	1.58	7.68	1.60
							20	5.30	1.49	6.55	1.52	6.74	1.55	6.85	1.57	6.97	1.58	7.24	1.61	7.55	1.64
							21	5.30	1.51	6.46	1.54	6.66	1.57	6.78	1.59	6.90	1.60	7.17	1.63	7.49	1.66
							23	5.30	1.55	6.31	1.58	6.51	1.61	6.63	1.62	6.76	1.64	7.05	1.67	7.37	1.70
							25	5.30	1.59	6.16	1.62	6.38	1.65	6.50	1.66	6.63	1.68	6.93	1.71	7.26	1.74
							27	5.30	1.63	6.02	1.66	6.25	1.69	6.37	1.70	6.51	1.72	6.82	1.75	7.16	1.78
							29	5.30	1.67	5.88	1.70	6.12	1.73	6.26	1.75	6.40	1.76	6.72	1.79	7.07	1.82
							31	5.30	1.71	5.76	1.74	6.01	1.77	6.15	1.79	6.30	1.80	6.62	1.83	6.99	1.86
							33	5.30	1.75	5.64	1.78	5.90	1.82	6.05	1.83	6.20	1.85	6.54	1.87	6.92	1.90
							35	5.30	1.80	5.54	1.83	5.81	1.86	6.00	1.87	6.12	1.89	6.46	1.92	6.85	1.94
							37	5.30	1.84	5.44	1.87	5.72	1.90	5.87	1.92	6.04	1.93	6.39	1.96	6.79	1.99
							39	5.30	1.89	5.34	1.92	5.64	1.95	5.80	1.97	5.97	1.98	6.34	2.01	6.74	2.04
							42	5.30	1.96	5.22	1.99	5.53	2.02	5.70	2.04	5.88	2.05	6.26	2.08	6.68	2.11
							44	5.30	2.01	5.15	2.04	5.47	2.07	5.64	2.09	5.83	2.10	6.22	2.13	6.65	2.15
							46	5.30	2.06	5.09	2.09	5.42	2.12	5.60	2.13	5.79	2.15	6.19	2.18	6.63	2.20
2000	2000	2500			6500	65%	10	5.74	1.41	8.10	1.45	8.26	1.48	8.35	1.50	8.45	1.52	8.69	1.55	8.97	1.58
							12	5.74	1.45	7.88	1.48	8.05	1.52	8.15	1.53	8.25	1.55	8.50	1.58	8.79	1.61
							14	5.74	1.48	7.67	1.52	7.85	1.55	7.95	1.57	8.06	1.59	8.32	1.62	8.62	1.65
							16	5.74	1.52	7.47	1.56	7.66	1.59	7.76	1.61	7.88	1.62	8.15	1.66	8.47	1.69
							18	5.74	1.56	7.28	1.60	7.47	1.63	7.59	1.65	7.71	1.66	7.99	1.69	8.32	1.72
							20	5.74	1.60	7.09	1.64	7.30	1.67	7.42	1.69	7.55	1.70	7.84	1.73	8.18	1.76
							21	5.74	1.62	7.00	1.66	7.22	1.69	7.34	1.71	7.47	1.72	7.77	1.75	8.11	1.78
							23	5.74	1.66	6.83	1.70	7.06	1.73	7.19	1.75	7.33	1.76	7.63	1.79	7.99	1.82
							25	5.74	1.70	6.67	1.74	6.91	1.77	7.04	1.79	7.19	1.80	7.51	1.84	7.87	1.87
							27	5.74	1.75	6.52	1.78	6.77	1.82	6.91	1.83	7.06	1.85	7.39	1.88	7.76	1.91
							29	5.74	1.79	6.37	1.83	6.63	1.86	6.78	1.88	6.93	1.89	7.28	1.92	7.66	1.95
							31	5.74	1.84	6.24	1.87	6.51	1.91	6.66	1.92	6.82	1.94	7.18	1.97	7.57	2.00
							33	5.74	1.88	6.11	1.92	6.40	1.95	6.55	1.97	6.72	1.98	7.08	2.01	7.49	2.04
							35	5.74	1.93	6.00	1.97	6.29	2.00	6.50	2.01	6.63	2.03	7.00	2.06	7.42	2.09
							37	5.74	1.98	5.89	2.01	6.19	2.05	6.36	2.06	6.54	2.08	6.93	2.11	7.36	2.14
							39	5.74	2.03	5.79	2.06	6.11	2.10	6.28	2.11	6.46	2.13	6.86	2.16	7.30	2.19
							42	5.74	2.11	5.66	2.14	5.99	2.17	6.17	2.19	6.37	2.20	6.78	2.23	7.24	2.26
							44	5.74	2.16	5.58	2.19	5.93	2.23	6.12	2.24	6.31	2.26	6.74	2.29	7.21	2.32
							46	5.74	2.21	5.52	2.25	5.87	2.28	6.07	2.29	6.27	2.31	6.71	2.34	7.19	2.37
2000	2000	3500			7500	75%	10	6.63	1.59	9.35	1.63	9.53	1.67	9.63	1.69	9.75	1.70	10.02	1.74	10.34	1.78
							12	6.63	1.63	9.10	1.67	9.29	1.71	9.40	1.73	9.52	1.74	9.81	1.78	10.14	1.81
							14	6.63	1.67	8.85	1.71	9.05	1.75	9.17	1.77	9.30	1.78	9.60	1.82	9.95	1.85
							16	6.63	1.71	8.62	1.75	8.83	1.79	8.96	1.81	9.10	1.83	9.41	1.86	9.77	1.90
							18	6.63	1.75	8.39	1.79	8.62	1.83	8.76	1.85	8.90	1.87	9.22	1.90	9.60	1.94
							20	6.63	1.80	8.18	1.84	8.42	1.88	8.56	1.90	8.71	1.91	9.05	1.95	9.44	1.98
							21	6.63	1.82	8.08	1.86	8.33	1.90	8.47	1.92	8.62	1.94	8.97	1.97	9.36	2.01
							23	6.63	1.87	7.88	1.91	8.14	1.95	8.29	1.96	8.45	1.98	8.81	2.02	9.21	2.05
							25	6.63	1.92	7.70	1.96	7.97	1.99	8.12	2.01	8.29	2.03	8.66	2.06	9.08	2.10
							27	6.63	1.96	7.52	2.00	7.81	2.04	7.97	2.06	8.14	2.08	8.52	2.11	8.95	2.15
							29	6.63	2.01	7.35	2.05	7.65	2.09	7.82	2.11	8.00	2.13	8.40	2.16	8.84	2.20
							31	6.63	2.07	7.20	2.10	7.51	2.14	7.69	2.16	7.87	2.18	8.28	2.21	8.74	2.25
							33	6.63	2.12	7.05	2.16	7.38	2.19	7.56	2.21	7.75	2.23	8.17	2.26	8.64	2.30
							35	6.63	2.17	6.92	2.21	7.26	2.25	7.50	2.26	7.64	2.28	8.08	2.32	8.56	2.35
							37	6.63	2.23	6.79	2.27	7.15	2.30	7.34	2.32	7.55	2.34	7.99	2.37	8.49	2.40
							39	6.63	2.28	6.68	2.32	7.05	2.36	7.25	2.38	7.46	2.39	7.92	2.43	8.43	2.46
							42	6.63	2.37	6.53	2.41	6.91	2.44	7.12	2.46	7.35	2.48	7.83	2.51	8.35	2.54
							44	6.63	2.43	6.44	2.47	6.84	2.50	7.06	2.52	7.28	2.54	7.78	2.57	8.32	2.60
							46	6.63	2.49	6.37	2.53	6.78	2.56	7.00	2.58	7.23	2.60	7.74	2.63	8.29	2.66
2000	2000	5000			9000	90%	10	7.68	1.83	10.83	1.88	11.04	1.92	11.16	1.95	11.30	1.97	11.61	2.01	11.99	2.05
							12	7.68	1.88	10.54	1.93	10.76	1.97	10.89	1.99	11.03	2.01	11.36	2.06	11.75	2.10
							14	7.68	1.93	10.26	1.97	10.49	2.02	10.63	2.04	10.78	2.06	11.13	2.10	11.53	2.14
							16	7.68	1.98	9.99	2.02	10.24	2.07	10.38	2.09	10.54	2.11	10.90	2.15	11.32	2.19
							18	7.68	2.03	9.73	2.07	9.99	2.12	10.14	2.14	10.31	2.16	10.69	2.20	11.12	2.24
							20	7.68	2.08	9.48	2.12	9.76	2.17	9.92	2.19	10.10	2.21	10.49	2.25	10.93	2.29
							21	7.68	2.10	9.36	2.15	9.65	2.19	9.81	2.21	9.99	2.24	10.39	2.28	10.84	2.32
							23	7.68	2.16	9.13	2.20	9.44	2.25	9.61	2.27	9.79	2.29	10.21	2.33	10.68	2.37
							25	7.68	2.21	8.92	2.26	9.23	2.30	9.41	2.32	9.61	2.34	10.04	2.38	10.52	2.42
							27	7.68	2.27	8.71	2.31	9.05	2.36	9.23	2.38	9.43	2.40	9.88	2.44	10.38	2.48
							29	7.68	2.33	8.52	2.37	8.87	2.41	9.06	2.44	9.27	2.46	9.73	2.50	10.24	2.54
							31	7.68	2.39	8.34	2.43	8.70	2.47	8.91	2.49	9.12	2.52	9.59	2.56	10.12	2.59
							33	7.68	2.45	8.17	2.49	8.55	2.53	8.76	2.55	8.98	2.58	9.47	2.61	10.02	2.65
							35	7.68	2.51	8.02	2.55	8.41	2.60	8.69	2.61	8.86	2.64	9.36	2.68	9.92	2.71
							37	7.68	2.57	7.87	2.62	8.28	2.66	8.51	2.68	8.74	2.70	9.26	2.74	9.84	2.78
							39	7.68	2.64	7.74	2.68	8.16	2.72	8.40	2.74	8.64	2.76	9.18	2.80	9.76	2.84
							42	7.68	2.74	7.57	2.78	8.01	2.82	8.25	2.84	8.51	2.86	9.07	2.90	9.68	2.94
							44	7.68	2.80	7.46	2.85	7.92	2.89	8.18	2.91	8.44	2.93	9.01	2.97	9.64	3.01
							46	7.68	2.87	7.38	2.92	7.85	2.96	8.11	2.98	8.38	3.00	8.97	3.04	9.61	3.08

* All figures comply with EN14511

1. Cooling capacity is based on 27°CDB / 19°CWB (indoor temperature), 35°CDB (outdoor temperature).
2. Heating capacity is based on 20°CDB (indoor temperature), 7°CDB/6°CWB (outdoor temperature).
3. Capacities are based on the following conditions : - Corresponding refrigerant piping length : 5m / - Level difference : 0m
4. The total ability of connected a indoor unit is up to 17.3kW
5. It is impossible to connect the indoor unit for one room only.
6. This data is reference data for temperature capacity trend.

1) Cooling

COOLING

Combination (Capacity Index)					Combination (Total)	Combination (%)	Outdoor Temperature (°C, DB)	Indoor Temperature(°C, WB)													
								14		16		18		19		20		22		24	
								TC(kW)	PI(kW)	TC(kW)	PI(kW)	TC(kW)	PI(kW)	TC(kW)	PI(kW)	TC(kW)	PI(kW)	TC(kW)	PI(kW)	TC(kW)	PI(kW)
2000	2000	6800			10800	108%	10	7.93	1.88	11.18	1.93	11.39	1.98	11.52	2.00	11.66	2.02	11.99	2.06	12.37	2.10
							12	7.93	1.93	10.88	1.98	11.11	2.02	11.24	2.05	11.39	2.07	11.73	2.11	12.13	2.15
							14	7.93	1.98	10.59	2.03	10.83	2.07	10.97	2.09	11.13	2.12	11.49	2.16	11.90	2.20
							16	7.93	2.03	10.31	2.08	10.56	2.12	10.72	2.14	10.88	2.17	11.25	2.21	11.68	2.25
							18	7.93	2.08	10.04	2.13	10.31	2.17	10.47	2.19	10.64	2.22	11.03	2.26	11.48	2.30
							20	7.93	2.13	9.79	2.18	10.07	2.23	10.24	2.25	10.42	2.27	10.82	2.31	11.29	2.35
							21	7.93	2.16	9.66	2.21	9.96	2.25	10.13	2.27	10.31	2.30	10.73	2.34	11.19	2.38
							23	7.93	2.22	9.43	2.26	9.74	2.31	9.92	2.33	10.11	2.35	10.54	2.39	11.02	2.43
							25	7.93	2.27	9.20	2.32	9.53	2.36	9.72	2.38	9.92	2.41	10.36	2.45	10.86	2.49
							27	7.93	2.33	8.99	2.38	9.34	2.42	9.53	2.44	9.74	2.46	10.19	2.50	10.71	2.54
							29	7.93	2.39	8.80	2.44	9.15	2.48	9.35	2.50	9.57	2.52	10.04	2.56	10.57	2.60
							31	7.93	2.45	8.61	2.50	8.98	2.54	9.19	2.56	9.41	2.58	9.90	2.62	10.45	2.66
							33	7.93	2.51	8.44	2.56	8.83	2.60	9.04	2.62	9.27	2.64	9.78	2.69	10.34	2.72
							35	7.93	2.58	8.28	2.62	8.68	2.67	8.97	2.68	9.14	2.71	9.66	2.75	10.24	2.79
							37	7.93	2.64	8.13	2.69	8.55	2.73	8.78	2.75	9.03	2.77	9.56	2.81	10.15	2.85
							39	7.93	2.71	7.99	2.75	8.43	2.80	8.67	2.82	8.92	2.84	9.47	2.88	10.08	2.92
							42	7.93	2.81	7.81	2.85	8.27	2.90	8.52	2.92	8.79	2.94	9.36	2.98	9.99	3.02
							44	7.93	2.88	7.71	2.92	8.18	2.97	8.44	2.99	8.71	3.01	9.30	3.05	9.95	3.09
							46	7.93	2.95	7.61	3.00	8.10	3.04	8.37	3.06	8.65	3.08	9.26	3.12	9.92	3.16
2000	2500	2500			7000	70%	10	6.19	1.48	8.73	1.52	8.89	1.56	8.99	1.57	9.10	1.59	9.36	1.62	9.66	1.66
							12	6.19	1.52	8.49	1.56	8.67	1.59	8.77	1.61	8.89	1.63	9.15	1.66	9.47	1.69
							14	6.19	1.56	8.26	1.60	8.45	1.63	8.56	1.65	8.68	1.67	8.96	1.70	9.29	1.73
							16	6.19	1.60	8.04	1.63	8.24	1.67	8.36	1.69	8.49	1.70	8.78	1.74	9.12	1.77
							18	6.19	1.64	7.83	1.67	8.05	1.71	8.17	1.73	8.31	1.74	8.61	1.78	8.96	1.81
							20	6.19	1.68	7.64	1.72	7.86	1.75	7.99	1.77	8.13	1.79	8.45	1.82	8.81	1.85
							21	6.19	1.70	7.54	1.74	7.77	1.77	7.90	1.79	8.05	1.81	8.37	1.84	8.74	1.87
							23	6.19	1.74	7.36	1.78	7.60	1.82	7.74	1.83	7.89	1.85	8.22	1.88	8.60	1.91
							25	6.19	1.79	7.18	1.83	7.44	1.86	7.58	1.88	7.74	1.89	8.08	1.93	8.47	1.96
							27	6.19	1.83	7.02	1.87	7.29	1.91	7.44	1.92	7.60	1.94	7.96	1.97	8.36	2.00
							29	6.19	1.88	6.86	1.92	7.14	1.95	7.30	1.97	7.47	1.99	7.84	2.02	8.25	2.05
							31	6.19	1.93	6.72	1.97	7.01	2.00	7.17	2.02	7.35	2.03	7.73	2.07	8.15	2.10
							33	6.19	1.98	6.58	2.01	6.89	2.05	7.06	2.07	7.24	2.08	7.63	2.11	8.07	2.14
							35	6.19	2.03	6.46	2.06	6.77	2.10	7.00	2.11	7.13	2.13	7.54	2.16	7.99	2.19
							37	6.19	2.08	6.34	2.11	6.67	2.15	6.85	2.17	7.04	2.18	7.46	2.21	7.92	2.24
							39	6.19	2.13	6.24	2.17	6.58	2.20	6.76	2.22	6.96	2.23	7.39	2.27	7.87	2.30
							42	6.19	2.21	6.09	2.25	6.45	2.28	6.65	2.30	6.86	2.31	7.30	2.35	7.80	2.38
							44	6.19	2.27	6.01	2.30	6.38	2.34	6.59	2.35	6.80	2.37	7.26	2.40	7.76	2.43
							46	6.19	2.32	5.94	2.36	6.32	2.39	6.53	2.41	6.75	2.42	7.22	2.46	7.74	2.49
2000	2500	3500			8000	80%	10	7.07	1.65	9.97	1.69	10.16	1.73	10.28	1.75	10.40	1.77	10.69	1.81	11.03	1.85
							12	7.07	1.69	9.70	1.73	9.90	1.77	10.02	1.79	10.16	1.81	10.46	1.85	10.82	1.89
							14	7.07	1.74	9.44	1.78	9.66	1.82	9.79	1.84	9.93	1.86	10.24	1.89	10.61	1.93
							16	7.07	1.78	9.19	1.82	9.42	1.86	9.56	1.88	9.70	1.90	10.04	1.94	10.42	1.97
							18	7.07	1.82	8.95	1.87	9.20	1.91	9.34	1.92	9.49	1.94	9.84	1.98	10.24	2.02
							20	7.07	1.87	8.73	1.91	8.99	1.95	9.13	1.97	9.29	1.99	9.65	2.03	10.06	2.06
							21	7.07	1.89	8.62	1.94	8.88	1.97	9.03	1.99	9.20	2.01	9.57	2.05	9.98	2.08
							23	7.07	1.94	8.41	1.98	8.69	2.02	8.84	2.04	9.02	2.06	9.40	2.10	9.83	2.13
							25	7.07	1.99	8.21	2.03	8.50	2.07	8.67	2.09	8.84	2.11	9.24	2.15	9.68	2.18
							27	7.07	2.04	8.02	2.08	8.33	2.12	8.50	2.14	8.68	2.16	9.09	2.20	9.55	2.23
							29	7.07	2.10	7.84	2.14	8.16	2.17	8.34	2.19	8.53	2.21	8.96	2.25	9.43	2.28
							31	7.07	2.15	7.68	2.19	8.01	2.23	8.20	2.25	8.40	2.26	8.83	2.30	9.32	2.34
							33	7.07	2.20	7.52	2.24	7.87	2.28	8.06	2.30	8.27	2.32	8.72	2.35	9.22	2.39
							35	7.07	2.26	7.38	2.30	7.74	2.34	8.00	2.35	8.15	2.37	8.62	2.41	9.13	2.44
							37	7.07	2.32	7.25	2.36	7.62	2.39	7.83	2.41	8.05	2.43	8.53	2.47	9.05	2.50
							39	7.07	2.37	7.13	2.41	7.52	2.45	7.73	2.47	7.96	2.49	8.45	2.52	8.99	2.56
							42	7.07	2.46	6.97	2.50	7.38	2.54	7.60	2.56	7.84	2.58	8.35	2.61	8.91	2.65
							44	7.07	2.53	6.87	2.56	7.30	2.60	7.53	2.62	7.77	2.64	8.30	2.67	8.87	2.71
							46	7.07	2.59	6.79	2.63	7.23	2.66	7.46	2.68	7.72	2.70	8.25	2.74	8.85	2.77
2000	2500	5000			9500	95%	10	7.76	1.83	10.95	1.88	11.15	1.92	11.28	1.95	11.42	1.97	11.73	2.01	12.11	2.05
							12	7.76	1.88	10.65	1.93	10.87	1.97	11.00	1.99	11.15	2.01	11.48	2.06	11.87	2.10
							14	7.76	1.93	10.36	1.97	10.60	2.02	10.74	2.04	10.89	2.06	11.24	2.10	11.65	2.14
							16	7.76	1.98	10.09	2.02	10.34	2.07	10.49	2.09	10.65	2.11	11.01	2.15	11.44	2.19
							18	7.76	2.03	9.83	2.07	10.10	2.12	10.25	2.14	10.42	2.16	10.80	2.20	11.23	2.24
							20	7.76	2.08	9.58	2.12	9.86	2.17	10.02	2.19	10.20	2.21	10.60	2.25	11.05	2.29
							21	7.76	2.10	9.46	2.15	9.75	2.19	9.92	2.21	10.10	2.24	10.50	2.28	10.96	2.32
							23	7.76	2.16	9.23	2.20	9.53	2.25	9.71	2.27	9.90	2.29	10.31	2.33	10.79	2.37
							25	7.76	2.21	9.01	2.26	9.33	2.30	9.51	2.32	9.71	2.34	10.14	2.38	10.63	2.42
							27	7.76	2.27	8.80	2.31	9.14	2.36	9.33	2.38	9.53	2.40	9.98	2.44	10.48	2.48
							29	7.76	2.33	8.61	2.37	8.96	2.41	9.16	2.44	9.37	2.46	9.83	2.50	10.35	2.54
							31	7.76	2.39	8.43	2.43	8.79	2.47	9.00	2.49	9.22	2.52	9.69	2.56	10.23	2.59
							33	7.76	2.45	8.26	2.49	8.64	2.53	8.85	2.55	9.08	2.58	9.57	2.61	10.12	2.65
							35	7.76	2.51	8.10	2.55	8.50	2.60	8.78	2.61	8.95	2.64	9.46	2.68	10.02	2.71
							37	7.76	2.57	7.95	2.62	8.37	2.66	8.59	2.68	8.83	2.70	9.36	2.74	9.94	2.78
							39	7.76	2.64	7.82	2.68	8.25	2.72	8.48	2.74	8.73	2.76	9.27	2.80	9.87	2.84
							42	7.76	2.74	7.64	2.78	8.09	2.82	8.34	2.84	8.60	2.86	9.16	2.90	9.78	2.94
							44	7.76	2.80	7.54	2.85	8.01	2.89	8.26	2.91	8.53	2.93	9.10	2.97	9.74	3.01
							46	7.76	2.87	7.45	2.92	7.93	2.96	8.19	2.98	8.47	3.00	9.06	3.04	9.71	3.08

* All figures comply with EN14511

1. Cooling capacity is based on 27°CDB / 19°CWB (indoor temperature), 35°CDB (outdoor temperature).
2. Heating capacity is based on 20°CDB (indoor temperature), 7°CDB/6°CWB (outdoor temperature).
3. Capacities are based on the following conditions : - Corresponding refrigerant piping length : 5m / - Level difference : 0m
4. The total ability of connected a indoor unit is up to 17.3kW
5. It is impossible to connect the indoor unit for one room only.
6. This data is reference data for temperature capacity trend.

7 AJ100FCJ5EH

1) Cooling

COOLING

Combination (Capacity Index)					Combination (Total)	Combination (%)	Outdoor Temperature (°C, DB)	Indoor Temperature(°C, WB)													
								14		16		18		19		20		22		24	
								TC(kW)	PI(kW)	TC(kW)	PI(kW)	TC(kW)	PI(kW)	TC(kW)	PI(kW)	TC(kW)	PI(kW)	TC(kW)	PI(kW)	TC(kW)	PI(kW)
2000	2500	6800			11300	113%	10	7.74	1.88	10.92	1.93	11.13	1.98	11.25	2.00	11.39	2.02	11.71	2.06	12.08	2.10
							12	7.74	1.93	10.62	1.98	10.85	2.02	10.98	2.05	11.12	2.07	11.46	2.11	11.85	2.15
							14	7.74	1.98	10.34	2.03	10.58	2.07	10.71	2.09	10.87	2.12	11.22	2.16	11.62	2.20
							16	7.74	2.03	10.07	2.08	10.32	2.12	10.46	2.14	10.63	2.17	10.99	2.21	11.41	2.25
							18	7.74	2.08	9.80	2.13	10.07	2.17	10.23	2.19	10.40	2.22	10.77	2.26	11.21	2.30
							20	7.74	2.13	9.56	2.18	9.84	2.23	10.00	2.25	10.18	2.27	10.57	2.31	11.02	2.35
							21	7.74	2.16	9.44	2.21	9.73	2.25	9.89	2.27	10.07	2.30	10.47	2.34	10.93	2.38
							23	7.74	2.22	9.21	2.26	9.51	2.31	9.69	2.33	9.87	2.35	10.29	2.39	10.76	2.43
							25	7.74	2.27	8.99	2.32	9.31	2.36	9.49	2.38	9.68	2.41	10.12	2.45	10.60	2.49
							27	7.74	2.33	8.78	2.38	9.12	2.42	9.31	2.44	9.51	2.46	9.96	2.50	10.46	2.54
							29	7.74	2.39	8.59	2.44	8.94	2.48	9.14	2.50	9.35	2.52	9.81	2.56	10.33	2.60
							31	7.74	2.45	8.41	2.50	8.77	2.54	8.98	2.56	9.19	2.58	9.67	2.62	10.20	2.66
							33	7.74	2.51	8.24	2.56	8.62	2.60	8.83	2.62	9.06	2.64	9.55	2.69	10.10	2.72
							35	7.74	2.58	8.08	2.62	8.48	2.67	8.76	2.68	8.93	2.71	9.44	2.75	10.00	2.79
							37	7.74	2.64	7.94	2.69	8.35	2.73	8.57	2.75	8.81	2.77	9.34	2.81	9.92	2.85
							39	7.74	2.71	7.80	2.75	8.23	2.80	8.46	2.82	8.71	2.84	9.25	2.88	9.84	2.92
							42	7.74	2.81	7.63	2.85	8.08	2.90	8.32	2.92	8.58	2.94	9.14	2.98	9.76	3.02
							44	7.74	2.88	7.53	2.92	7.99	2.97	8.24	2.99	8.51	3.01	9.08	3.05	9.72	3.09
							46	7.74	2.95	7.43	3.00	7.91	3.04	8.17	3.06	8.45	3.08	9.04	3.12	9.69	3.16
2000	3500	3500			9000	90%	10	7.68	1.83	10.83	1.87	11.04	1.92	11.16	1.94	11.30	1.96	11.61	2.00	11.99	2.04
							12	7.68	1.87	10.54	1.92	10.76	1.96	10.89	1.98	11.03	2.01	11.36	2.05	11.75	2.09
							14	7.68	1.92	10.26	1.97	10.49	2.01	10.63	2.03	10.78	2.05	11.13	2.09	11.53	2.13
							16	7.68	1.97	9.99	2.01	10.24	2.06	10.38	2.08	10.54	2.10	10.90	2.14	11.32	2.18
							18	7.68	2.02	9.73	2.06	9.99	2.11	10.14	2.13	10.31	2.15	10.69	2.19	11.12	2.23
							20	7.68	2.07	9.48	2.12	9.76	2.16	9.92	2.18	10.10	2.20	10.49	2.24	10.93	2.28
							21	7.68	2.10	9.36	2.14	9.65	2.18	9.81	2.21	9.99	2.23	10.39	2.27	10.84	2.31
							23	7.68	2.15	9.13	2.19	9.44	2.24	9.61	2.26	9.79	2.28	10.21	2.32	10.68	2.36
							25	7.68	2.20	8.92	2.25	9.23	2.29	9.41	2.31	9.61	2.33	10.04	2.37	10.52	2.41
							27	7.68	2.26	8.71	2.31	9.05	2.35	9.23	2.37	9.43	2.39	9.88	2.43	10.38	2.47
							29	7.68	2.32	8.52	2.36	8.87	2.41	9.06	2.43	9.27	2.45	9.73	2.49	10.24	2.53
							31	7.68	2.38	8.34	2.42	8.70	2.46	8.91	2.49	9.12	2.51	9.59	2.55	10.12	2.58
							33	7.68	2.44	8.17	2.48	8.55	2.52	8.76	2.55	8.98	2.57	9.47	2.60	10.02	2.64
							35	7.68	2.50	8.02	2.54	8.41	2.59	8.69	2.60	8.86	2.63	9.36	2.67	9.92	2.70
							37	7.68	2.56	7.87	2.61	8.28	2.65	8.51	2.67	8.74	2.69	9.26	2.73	9.84	2.77
							39	7.68	2.63	7.74	2.67	8.16	2.71	8.40	2.73	8.64	2.75	9.18	2.79	9.76	2.83
							42	7.68	2.73	7.57	2.77	8.01	2.81	8.25	2.83	8.51	2.85	9.07	2.89	9.68	2.93
							44	7.68	2.79	7.46	2.84	7.92	2.88	8.18	2.90	8.44	2.92	9.01	2.96	9.64	2.99
							46	7.68	2.86	7.38	2.91	7.85	2.95	8.11	2.97	8.38	2.99	8.97	3.03	9.61	3.06
2000	3500	5000			10500	105%	10	7.89	1.87	11.13	1.92	11.34	1.96	11.47	1.98	11.61	2.01	11.94	2.05	12.32	2.09
							12	7.89	1.92	10.83	1.96	11.06	2.01	11.19	2.03	11.34	2.05	11.68	2.09	12.08	2.14
							14	7.89	1.96	10.54	2.01	10.78	2.06	10.92	2.08	11.08	2.10	11.43	2.14	11.85	2.18
							16	7.89	2.01	10.26	2.06	10.52	2.11	10.67	2.13	10.83	2.15	11.20	2.19	11.63	2.23
							18	7.89	2.06	10.00	2.11	10.27	2.16	10.43	2.18	10.60	2.20	10.98	2.24	11.43	2.28
							20	7.89	2.12	9.74	2.16	10.03	2.21	10.19	2.23	10.37	2.25	10.78	2.29	11.23	2.33
							21	7.89	2.14	9.62	2.19	9.92	2.24	10.08	2.26	10.27	2.28	10.68	2.32	11.14	2.36
							23	7.89	2.20	9.39	2.25	9.70	2.29	9.87	2.31	10.06	2.33	10.49	2.37	10.97	2.41
							25	7.89	2.26	9.16	2.30	9.49	2.35	9.67	2.37	9.87	2.39	10.31	2.43	10.81	2.47
							27	7.89	2.31	8.95	2.36	9.29	2.40	9.49	2.42	9.69	2.45	10.15	2.49	10.66	2.53
							29	7.89	2.37	8.76	2.42	9.11	2.46	9.31	2.48	9.53	2.50	10.00	2.54	10.53	2.58
							31	7.89	2.43	8.57	2.48	8.94	2.52	9.15	2.54	9.37	2.56	9.86	2.60	10.40	2.64
							33	7.89	2.49	8.40	2.54	8.79	2.58	9.00	2.60	9.23	2.62	9.73	2.67	10.29	2.70
							35	7.89	2.56	8.24	2.60	8.64	2.65	8.93	2.66	9.10	2.69	9.62	2.73	10.19	2.77
							37	7.89	2.62	8.09	2.67	8.51	2.71	8.74	2.73	8.98	2.75	9.52	2.79	10.11	2.83
							39	7.89	2.69	7.96	2.73	8.39	2.78	8.63	2.80	8.88	2.82	9.43	2.86	10.03	2.89
							42	7.89	2.79	7.78	2.83	8.23	2.88	8.48	2.90	8.75	2.92	9.32	2.96	9.95	3.00
							44	7.89	2.86	7.67	2.90	8.14	2.95	8.40	2.97	8.67	2.99	9.26	3.03	9.90	3.06
							46	7.89	2.93	7.58	2.97	8.07	3.02	8.33	3.04	8.61	3.06	9.21	3.10	9.87	3.13
2000	3500	6800			12300	123%	10	7.92	1.92	11.17	1.97	11.38	2.01	11.51	2.04	11.65	2.06	11.98	2.10	12.36	2.14
							12	7.92	1.97	10.87	2.01	11.09	2.06	11.23	2.08	11.38	2.11	11.72	2.15	12.12	2.19
							14	7.92	2.02	10.57	2.06	10.82	2.11	10.96	2.13	11.12	2.16	11.47	2.20	11.89	2.24
							16	7.92	2.07	10.30	2.11	10.55	2.16	10.70	2.18	10.87	2.21	11.24	2.25	11.67	2.29
							18	7.92	2.12	10.03	2.17	10.30	2.21	10.46	2.24	10.63	2.26	11.02	2.30	11.46	2.34
							20	7.92	2.17	9.77	2.22	10.06	2.27	10.23	2.29	10.41	2.31	10.81	2.35	11.27	2.39
							21	7.92	2.20	9.65	2.25	9.95	2.29	10.12	2.32	10.30	2.34	10.71	2.38	11.18	2.42
							23	7.92	2.26	9.42	2.30	9.73	2.35	9.91	2.37	10.10	2.39	10.52	2.44	11.01	2.48
							25	7.92	2.31	9.19	2.36	9.52	2.41	9.71	2.43	9.91	2.45	10.35	2.49	10.85	2.53
							27	7.92	2.37	8.98	2.42	9.33	2.47	9.52	2.49	9.73	2.51	10.18	2.55	10.70	2.59
							29	7.92	2.43	8.79	2.48	9.14	2.53	9.34	2.55	9.56	2.57	10.03	2.61	10.56	2.65
							31	7.92	2.50	8.60	2.54	8.97	2.59	9.18	2.61	9.40	2.63	9.89	2.67	10.44	2.71
							33	7.92	2.56	8.43	2.61	8.82	2.65	9.03	2.67	9.26	2.69	9.77	2.74	10.33	2.78
							35	7.92	2.62	8.27	2.67	8.67	2.71	8.96	2.73	9.13	2.76	9.65	2.80	10.23	2.84
							37	7.92	2.69	8.12	2.74	8.54	2.78	8.77	2.80	9.02	2.82	9.55	2.86	10.14	2.90
							39	7.92	2.76	7.98	2.80	8.42	2.85	8.66	2.87	8.91	2.89	9.46	2.93	10.07	2.97
							42	7.92	2.86	7.80	2.91	8.26	2.95	8.51	2.97	8.78	2.99	9.35	3.04	9.98	3.07
							44	7.92	2.93	7.70	2.98	8.17	3.02	8.43	3.04	8.70	3.07	9.29	3.11	9.94	3.14
							46	7.92	3.01	7.60	3.05	8.09	3.10	8.36	3.12	8.64	3.14	9.25	3.18	9.91	3.22

* All figures comply with EN14511

1. Cooling capacity is based on 27°CDB / 19°CWB (indoor temperature), 35°CDB (outdoor temperature).
2. Heating capacity is based on 20°CDB (indoor temperature), 7°CDB/6°CWB (outdoor temperature).
3. Capacities are based on the following conditions : - Corresponding refrigerant piping length : 5m / - Level difference : 0m
4. The total ability of connected a indoor unit is up to 17.3kW
5. It is impossible to connect the indoor unit for one room only.
6. This data is reference data for temperature capacity trend.

1) Cooling

COOLING

Combination (Capacity Index)					Combination (Total)	Combination (%)	Outdoor Temperature (°C, DB)	Indoor Temperature(°C, WB)													
								14		16		18		19		20		22		24	
								TC(kW)	PI(kW)	TC(kW)	PI(kW)	TC(kW)	PI(kW)	TC(kW)	PI(kW)	TC(kW)	PI(kW)	TC(kW)	PI(kW)	TC(kW)	PI(kW)
2000	5000	5000			12000	120%	10	7.87	1.91	11.09	1.96	11.30	2.01	11.43	2.03	11.57	2.05	11.90	2.09	12.28	2.14
							12	7.87	1.96	10.79	2.01	11.02	2.05	11.15	2.08	11.30	2.10	11.64	2.14	12.04	2.18
							14	7.87	2.01	10.50	2.06	10.74	2.10	10.89	2.13	11.04	2.15	11.40	2.19	11.81	2.23
							16	7.87	2.06	10.23	2.11	10.48	2.15	10.63	2.18	10.80	2.20	11.17	2.24	11.59	2.28
							18	7.87	2.11	9.96	2.16	10.23	2.21	10.39	2.23	10.56	2.25	10.95	2.29	11.39	2.33
							20	7.87	2.17	9.71	2.21	10.00	2.26	10.16	2.28	10.34	2.30	10.74	2.35	11.20	2.39
							21	7.87	2.19	9.59	2.24	9.88	2.29	10.05	2.31	10.23	2.33	10.64	2.37	11.11	2.41
							23	7.87	2.25	9.35	2.30	9.66	2.34	9.84	2.36	10.03	2.39	10.45	2.43	10.93	2.47
							25	7.87	2.31	9.13	2.35	9.46	2.40	9.64	2.42	9.84	2.44	10.28	2.48	10.77	2.52
							27	7.87	2.36	8.92	2.41	9.26	2.46	9.46	2.48	9.66	2.50	10.12	2.54	10.63	2.58
							29	7.87	2.43	8.73	2.47	9.08	2.52	9.28	2.54	9.50	2.56	9.96	2.60	10.49	2.64
							31	7.87	2.49	8.54	2.53	8.91	2.58	9.12	2.60	9.34	2.62	9.83	2.66	10.37	2.70
							33	7.87	2.55	8.37	2.60	8.76	2.64	8.97	2.66	9.20	2.68	9.70	2.73	10.26	2.76
							35	7.87	2.61	8.21	2.66	8.61	2.71	8.90	2.72	9.07	2.75	9.59	2.79	10.16	2.83
							37	7.87	2.68	8.06	2.73	8.48	2.77	8.71	2.79	8.95	2.81	9.49	2.85	10.07	2.89
							39	7.87	2.75	7.93	2.79	8.36	2.84	8.60	2.86	8.85	2.88	9.40	2.92	10.00	2.96
							42	7.87	2.85	7.75	2.90	8.20	2.94	8.45	2.96	8.72	2.98	9.29	3.02	9.91	3.06
							44	7.87	2.92	7.65	2.97	8.12	3.01	8.37	3.03	8.64	3.05	9.23	3.09	9.87	3.13
							46	7.87	3.00	7.55	3.04	8.04	3.08	8.30	3.11	8.58	3.13	9.18	3.17	9.84	3.20
2000	5000	6800			13800	138%	10	10.41	1.99	10.82	2.04	11.24	2.08	11.45	2.10	11.66	2.12	12.08	2.16	12.52	2.21
							12	10.23	2.05	10.64	2.09	11.06	2.13	11.27	2.15	11.48	2.17	11.91	2.22	12.34	2.26
							14	10.05	2.10	10.46	2.14	10.88	2.19	11.09	2.21	11.30	2.23	11.73	2.27	12.16	2.32
							16	9.87	2.16	10.28	2.20	10.70	2.24	10.91	2.26	11.12	2.29	11.55	2.33	11.99	2.37
							18	9.69	2.21	10.10	2.26	10.52	2.30	10.73	2.32	10.95	2.34	11.38	2.39	11.81	2.43
							20	9.51	2.27	9.93	2.31	10.34	2.36	10.56	2.38	10.77	2.40	11.20	2.45	11.64	2.49
							21	9.42	2.30	9.84	2.34	10.26	2.39	10.47	2.41	10.68	2.43	11.11	2.47	11.55	2.52
							23	9.24	2.36	9.66	2.40	10.08	2.45	10.29	2.47	10.51	2.49	10.94	2.53	11.38	2.58
							25	9.07	2.42	9.48	2.46	9.90	2.51	10.12	2.53	10.33	2.55	10.76	2.60	11.20	2.64
							27	8.89	2.48	9.31	2.52	9.73	2.57	9.94	2.59	10.16	2.61	10.59	2.66	11.03	2.70
							29	8.71	2.54	9.13	2.58	9.55	2.63	9.77	2.65	9.98	2.68	10.42	2.72	10.86	2.77
							31	8.54	2.60	8.95	2.65	9.38	2.69	9.59	2.72	9.81	2.74	10.24	2.78	10.68	2.83
							33	8.36	2.67	8.78	2.71	9.20	2.76	9.42	2.78	9.63	2.80	10.07	2.85	10.51	2.89
							35	8.18	2.73	8.60	2.78	9.03	2.82	9.26	2.84	9.46	2.87	9.90	2.92	10.34	2.96
							37	8.01	2.80	8.43	2.84	8.85	2.89	9.07	2.91	9.29	2.94	9.72	2.98	10.17	3.03
							39	7.84	2.86	8.26	2.91	8.68	2.96	8.90	2.98	9.11	3.00	9.55	3.05	10.00	3.10
							42	7.57	2.97	8.00	3.01	8.42	3.06	8.64	3.08	8.86	3.11	9.30	3.15	9.74	3.20
							44	7.40	3.03	7.82	3.08	8.25	3.13	8.47	3.15	8.69	3.18	9.13	3.22	9.57	3.27
							46	7.23	3.11	7.65	3.15	8.08	3.20	8.30	3.22	8.52	3.25	8.96	3.30	9.40	3.34
2000	6800	6800			15600	156%	10	11.02	2.01	11.45	2.05	11.89	2.09	12.11	2.11	12.34	2.14	12.79	2.18	13.25	2.22
							12	10.83	2.06	11.26	2.10	11.70	2.15	11.92	2.17	12.15	2.19	12.60	2.23	13.06	2.28
							14	10.64	2.12	11.07	2.16	11.51	2.20	11.74	2.22	11.96	2.25	12.41	2.29	12.87	2.33
							16	10.45	2.17	10.88	2.21	11.32	2.26	11.55	2.28	11.77	2.30	12.23	2.35	12.69	2.39
							18	10.26	2.23	10.69	2.27	11.14	2.32	11.36	2.34	11.58	2.36	12.04	2.40	12.50	2.45
							20	10.07	2.29	10.50	2.33	10.95	2.37	11.17	2.40	11.40	2.42	11.85	2.46	12.32	2.51
							21	9.97	2.31	10.41	2.36	10.85	2.40	11.08	2.43	11.30	2.45	11.76	2.49	12.22	2.54
							23	9.78	2.37	10.22	2.42	10.67	2.46	10.89	2.49	11.12	2.51	11.58	2.55	12.04	2.60
							25	9.60	2.43	10.03	2.48	10.48	2.52	10.71	2.55	10.93	2.57	11.39	2.61	11.86	2.66
							27	9.41	2.50	9.85	2.54	10.29	2.59	10.52	2.61	10.75	2.63	11.21	2.68	11.67	2.72
							29	9.22	2.56	9.66	2.60	10.11	2.65	10.33	2.67	10.56	2.69	11.02	2.74	11.49	2.79
							31	9.03	2.62	9.48	2.67	9.92	2.71	10.15	2.74	10.38	2.76	10.84	2.80	11.31	2.85
							33	8.85	2.69	9.29	2.73	9.74	2.78	9.97	2.80	10.19	2.82	10.66	2.87	11.12	2.92
							35	8.66	2.75	9.11	2.80	9.55	2.84	9.80	2.86	10.01	2.89	10.47	2.94	10.94	2.98
							37	8.48	2.82	8.92	2.86	9.37	2.91	9.60	2.93	9.83	2.96	10.29	3.00	10.76	3.05
							39	8.29	2.88	8.74	2.93	9.19	2.98	9.42	3.00	9.65	3.02	10.11	3.07	10.58	3.12
							42	8.02	2.99	8.46	3.03	8.91	3.08	9.14	3.10	9.37	3.13	9.84	3.18	10.31	3.22
							44	7.83	3.06	8.28	3.10	8.73	3.15	8.96	3.18	9.19	3.20	9.66	3.25	10.13	3.29
							46	7.65	3.13	8.10	3.17	8.55	3.22	8.78	3.25	9.01	3.27	9.48	3.32	9.95	3.37
2500	2500	2500			7500	75%	10	6.63	1.58	9.35	1.62	9.53	1.66	9.63	1.68	9.75	1.70	10.02	1.73	10.34	1.77
							12	6.63	1.62	9.10	1.66	9.29	1.70	9.40	1.72	9.52	1.74	9.81	1.77	10.14	1.81
							14	6.63	1.66	8.85	1.70	9.05	1.74	9.17	1.76	9.30	1.78	9.60	1.81	9.95	1.85
							16	6.63	1.70	8.62	1.74	8.83	1.78	8.96	1.80	9.10	1.82	9.41	1.85	9.77	1.89
							18	6.63	1.75	8.39	1.79	8.62	1.82	8.76	1.84	8.90	1.86	9.22	1.90	9.60	1.93
							20	6.63	1.79	8.18	1.83	8.42	1.87	8.56	1.89	8.71	1.90	9.05	1.94	9.44	1.97
							21	6.63	1.81	8.08	1.85	8.33	1.89	8.47	1.91	8.62	1.93	8.97	1.96	9.36	2.00
							23	6.63	1.86	7.88	1.90	8.14	1.94	8.29	1.96	8.45	1.97	8.81	2.01	9.21	2.04
							25	6.63	1.91	7.70	1.95	7.97	1.98	8.12	2.00	8.29	2.02	8.66	2.05	9.08	2.09
							27	6.63	1.96	7.52	1.99	7.81	2.03	7.97	2.05	8.14	2.07	8.52	2.10	8.95	2.14
							29	6.63	2.01	7.35	2.04	7.65	2.08	7.82	2.10	8.00	2.12	8.40	2.15	8.84	2.19
							31	6.63	2.06	7.20	2.10	7.51	2.13	7.69	2.15	7.87	2.17	8.28	2.20	8.74	2.24
							33	6.63	2.11	7.05	2.15	7.38	2.18	7.56	2.20	7.75	2.22	8.17	2.25	8.64	2.29
							35	6.63	2.16	6.92	2.20	7.26	2.24	7.50	2.25	7.64	2.27	8.08	2.31	8.56	2.34
							37	6.63	2.22	6.79	2.26	7.15	2.29	7.34	2.31	7.55	2.33	7.99	2.36	8.49	2.39
							39	6.63	2.27	6.68	2.31	7.05	2.35	7.25	2.37	7.46	2.38	7.92	2.42	8.43	2.45
							42	6.63	2.36	6.53	2.40	6.91	2.43	7.12	2.45	7.35	2.47	7.83	2.50	8.35	2.53
							44	6.63	2.42	6.44	2.46	6.84	2.49	7.06	2.51	7.28	2.53	7.78	2.56	8.32	2.59
							46	6.63	2.48	6.37	2.52	6.78	2.55	7.00	2.57	7.23	2.59	7.74	2.62	8.29	2.65

* All figures comply with EN14511

1. Cooling capacity is based on 27°CDB / 19°CWB (indoor temperature), 35°CDB (outdoor temperature).
2. Heating capacity is based on 20°CDB (indoor temperature), 7°CDB/6°CWB (outdoor temperature).
3. Capacities are based on the following conditions : - Corresponding refrigerant piping length : 5m / - Level difference : 0m
4. The total ability of connected a indoor unit is up to 17.3kW
5. It is impossible to connect the indoor unit for one room only.
6. This data is reference data for temperature capacity trend.

7 AJ100FCJ5EH

1) Cooling

COOLING

Combination (Capacity Index)					Combination (Total)	Combination (%)	Outdoor Temperature (°C, DB)	Indoor Temperature(°C, WB)													
								14		16		18		19		20		22		24	
								TC(kW)	PI(kW)	TC(kW)	PI(kW)	TC(kW)	PI(kW)	TC(kW)	PI(kW)	TC(kW)	PI(kW)	TC(kW)	PI(kW)	TC(kW)	PI(kW)
2500	2500	3500			8500	85%	10	7.51	1.76	10.60	1.80	10.80	1.84	10.92	1.86	11.05	1.89	11.36	1.93	11.72	1.96
							12	7.51	1.80	10.31	1.84	10.52	1.89	10.65	1.91	10.79	1.93	11.12	1.97	11.49	2.01
							14	7.51	1.85	10.03	1.89	10.26	1.93	10.40	1.95	10.55	1.97	10.88	2.01	11.28	2.05
							16	7.51	1.89	9.77	1.94	10.01	1.98	10.15	2.00	10.31	2.02	10.66	2.06	11.07	2.10
							18	7.51	1.94	9.51	1.98	9.77	2.03	9.92	2.05	10.09	2.07	10.45	2.11	10.88	2.14
							20	7.51	1.99	9.27	2.03	9.55	2.08	9.70	2.10	9.87	2.12	10.26	2.16	10.69	2.19
							21	7.51	2.02	9.16	2.06	9.44	2.10	9.60	2.12	9.77	2.14	10.16	2.18	10.61	2.22
							23	7.51	2.07	8.93	2.11	9.23	2.15	9.40	2.17	9.58	2.19	9.98	2.23	10.44	2.27
							25	7.51	2.12	8.72	2.16	9.03	2.20	9.21	2.22	9.40	2.24	9.82	2.28	10.29	2.32
							27	7.51	2.17	8.52	2.22	8.85	2.26	9.03	2.28	9.23	2.30	9.66	2.34	10.15	2.37
							29	7.51	2.23	8.33	2.27	8.67	2.31	8.86	2.33	9.07	2.35	9.52	2.39	10.02	2.43
							31	7.51	2.29	8.16	2.33	8.51	2.37	8.71	2.39	8.92	2.41	9.38	2.45	9.90	2.48
							33	7.51	2.34	7.99	2.39	8.36	2.43	8.57	2.45	8.79	2.47	9.26	2.50	9.80	2.54
							35	7.51	2.40	7.84	2.45	8.23	2.49	8.50	2.50	8.66	2.53	9.16	2.56	9.70	2.60
							37	7.51	2.46	7.70	2.51	8.10	2.55	8.32	2.57	8.55	2.59	9.06	2.62	9.62	2.66
							39	7.51	2.53	7.57	2.57	7.99	2.61	8.21	2.63	8.45	2.65	8.97	2.68	9.55	2.72
							42	7.51	2.62	7.40	2.66	7.84	2.70	8.07	2.72	8.33	2.74	8.87	2.78	9.47	2.82
							44	7.51	2.69	7.30	2.73	7.75	2.77	8.00	2.79	8.26	2.81	8.81	2.84	9.43	2.88
							46	7.51	2.75	7.21	2.79	7.68	2.83	7.93	2.85	8.20	2.87	8.77	2.91	9.40	2.95
2500	2500	5000			10000	100%	10	7.82	1.83	11.03	1.88	11.24	1.92	11.37	1.95	11.51	1.97	11.83	2.01	12.21	2.05
							12	7.82	1.88	10.73	1.93	10.96	1.97	11.09	1.99	11.24	2.01	11.57	2.06	11.97	2.10
							14	7.82	1.93	10.44	1.97	10.68	2.02	10.82	2.04	10.98	2.06	11.33	2.10	11.74	2.14
							16	7.82	1.98	10.17	2.02	10.42	2.07	10.57	2.09	10.73	2.11	11.10	2.15	11.53	2.19
							18	7.82	2.03	9.91	2.07	10.18	2.12	10.33	2.14	10.50	2.16	10.88	2.20	11.32	2.24
							20	7.82	2.08	9.65	2.12	9.94	2.17	10.10	2.19	10.28	2.21	10.68	2.25	11.13	2.29
							21	7.82	2.10	9.53	2.15	9.83	2.19	9.99	2.21	10.18	2.24	10.58	2.28	11.04	2.32
							23	7.82	2.16	9.30	2.20	9.61	2.25	9.78	2.27	9.97	2.29	10.39	2.33	10.87	2.37
							25	7.82	2.21	9.08	2.26	9.40	2.30	9.59	2.32	9.78	2.34	10.22	2.38	10.71	2.42
							27	7.82	2.27	8.87	2.31	9.21	2.36	9.40	2.38	9.61	2.40	10.06	2.44	10.57	2.48
							29	7.82	2.33	8.68	2.37	9.03	2.41	9.23	2.44	9.44	2.46	9.91	2.50	10.43	2.54
							31	7.82	2.39	8.49	2.43	8.86	2.47	9.07	2.49	9.29	2.52	9.77	2.56	10.31	2.59
							33	7.82	2.45	8.32	2.49	8.71	2.53	8.92	2.55	9.15	2.58	9.65	2.61	10.20	2.65
							35	7.82	2.51	8.16	2.55	8.56	2.60	8.85	2.61	9.02	2.64	9.53	2.68	10.10	2.71
							37	7.82	2.57	8.02	2.62	8.43	2.66	8.66	2.68	8.90	2.70	9.43	2.74	10.02	2.78
							39	7.82	2.64	7.88	2.68	8.31	2.72	8.55	2.74	8.80	2.76	9.34	2.80	9.94	2.84
							42	7.82	2.74	7.71	2.78	8.16	2.82	8.41	2.84	8.67	2.86	9.23	2.90	9.86	2.94
							44	7.82	2.80	7.60	2.85	8.07	2.89	8.33	2.91	8.60	2.93	9.18	2.97	9.82	3.01
							46	7.82	2.87	7.51	2.92	8.00	2.96	8.26	2.98	8.54	3.00	9.13	3.04	9.79	3.08
2500	2500	6800			11800	118%	10	7.84	1.91	11.06	1.96	11.27	2.01	11.39	2.03	11.53	2.05	11.86	2.09	12.23	2.14
							12	7.84	1.96	10.76	2.01	10.98	2.05	11.11	2.08	11.26	2.10	11.60	2.14	11.99	2.18
							14	7.84	2.01	10.47	2.06	10.71	2.10	10.85	2.13	11.00	2.15	11.36	2.19	11.77	2.23
							16	7.84	2.06	10.19	2.11	10.45	2.15	10.60	2.18	10.76	2.20	11.13	2.24	11.55	2.28
							18	7.84	2.11	9.93	2.16	10.20	2.21	10.36	2.23	10.53	2.25	10.91	2.29	11.35	2.33
							20	7.84	2.17	9.68	2.21	9.96	2.26	10.13	2.28	10.30	2.30	10.70	2.35	11.16	2.39
							21	7.84	2.19	9.56	2.24	9.85	2.29	10.02	2.31	10.20	2.33	10.61	2.37	11.07	2.41
							23	7.84	2.25	9.32	2.30	9.63	2.34	9.81	2.36	10.00	2.39	10.42	2.43	10.90	2.47
							25	7.84	2.31	9.10	2.35	9.43	2.40	9.61	2.42	9.81	2.44	10.24	2.48	10.74	2.52
							27	7.84	2.36	8.89	2.41	9.23	2.46	9.42	2.48	9.63	2.50	10.08	2.54	10.59	2.58
							29	7.84	2.43	8.70	2.47	9.05	2.52	9.25	2.54	9.46	2.56	9.93	2.60	10.46	2.64
							31	7.84	2.49	8.51	2.53	8.88	2.58	9.09	2.60	9.31	2.62	9.79	2.66	10.33	2.70
							33	7.84	2.55	8.34	2.60	8.73	2.64	8.94	2.66	9.17	2.68	9.67	2.73	10.22	2.76
							35	7.84	2.61	8.18	2.66	8.58	2.71	8.87	2.72	9.04	2.75	9.55	2.79	10.13	2.83
							37	7.84	2.68	8.04	2.73	8.45	2.77	8.68	2.79	8.92	2.81	9.45	2.85	10.04	2.89
							39	7.84	2.75	7.90	2.79	8.33	2.84	8.57	2.86	8.82	2.88	9.37	2.92	9.97	2.96
							42	7.84	2.85	7.72	2.90	8.18	2.94	8.43	2.96	8.69	2.98	9.26	3.02	9.88	3.06
							44	7.84	2.92	7.62	2.97	8.09	3.01	8.35	3.03	8.62	3.05	9.20	3.09	9.84	3.13
							46	7.84	3.00	7.53	3.04	8.01	3.08	8.28	3.11	8.55	3.13	9.15	3.17	9.81	3.20
2500	3500	3500			9500	95%	10	7.75	1.83	10.93	1.87	11.14	1.92	11.26	1.94	11.40	1.96	11.72	2.00	12.10	2.04
							12	7.75	1.87	10.64	1.92	10.86	1.96	10.99	1.98	11.14	2.01	11.47	2.05	11.86	2.09
							14	7.75	1.92	10.35	1.97	10.59	2.01	10.73	2.03	10.88	2.05	11.23	2.09	11.63	2.13
							16	7.75	1.97	10.08	2.01	10.33	2.06	10.48	2.08	10.64	2.10	11.00	2.14	11.42	2.18
							18	7.75	2.02	9.82	2.06	10.08	2.11	10.24	2.13	10.41	2.15	10.79	2.19	11.22	2.23
							20	7.75	2.07	9.57	2.12	9.85	2.16	10.01	2.18	10.19	2.20	10.58	2.24	11.03	2.28
							21	7.75	2.10	9.45	2.14	9.74	2.18	9.90	2.21	10.08	2.23	10.49	2.27	10.94	2.31
							23	7.75	2.15	9.22	2.19	9.52	2.24	9.70	2.26	9.88	2.28	10.30	2.32	10.77	2.36
							25	7.75	2.20	9.00	2.25	9.32	2.29	9.50	2.31	9.70	2.33	10.13	2.37	10.62	2.41
							27	7.75	2.26	8.79	2.31	9.13	2.35	9.32	2.37	9.52	2.39	9.97	2.43	10.47	2.47
							29	7.75	2.32	8.60	2.36	8.95	2.41	9.15	2.43	9.36	2.45	9.82	2.49	10.34	2.53
							31	7.75	2.38	8.42	2.42	8.78	2.46	8.99	2.49	9.20	2.51	9.68	2.55	10.22	2.58
							33	7.75	2.44	8.25	2.48	8.63	2.52	8.84	2.55	9.07	2.57	9.56	2.60	10.11	2.64
							35	7.75	2.50	8.09	2.54	8.49	2.59	8.77	2.60	8.94	2.63	9.45	2.67	10.01	2.70
							37	7.75	2.56	7.95	2.61	8.36	2.65	8.58	2.67	8.82	2.69	9.35	2.73	9.93	2.77
							39	7.75	2.63	7.81	2.67	8.24	2.71	8.47	2.73	8.72	2.75	9.26	2.79	9.85	2.83
							42	7.75	2.73	7.64	2.77	8.09	2.81	8.33	2.83	8.59	2.85	9.15	2.89	9.77	2.93
							44	7.75	2.79	7.53	2.84	8.00	2.88	8.25	2.90	8.52	2.92	9.09	2.96	9.73	2.99
							46	7.75	2.86	7.44	2.91	7.92	2.95	8.18	2.97	8.46	2.99	9.05	3.03	9.70	3.06

* All figures comply with EN14511

1. Cooling capacity is based on 27°CDB / 19°CWB (indoor temperature), 35°CDB (outdoor temperature).
2. Heating capacity is based on 20°CDB (indoor temperature), 7°CDB/6°CWB (outdoor temperature).
3. Capacities are based on the following conditions : - Corresponding refrigerant piping length : 5m / - Level difference : 0m
4. The total ability of connected a indoor unit is up to 17.3kW
5. It is impossible to connect the indoor unit for one room only.
6. This data is reference data for temperature capacity trend.

1) Cooling

COOLING

Combination (Capacity Index)					Combination (Total)	Combination (%)	Outdoor Temperature (°C, DB)	Indoor Temperature(°C, WB)													
								14		16		18		19		20		22		24	
								TC(kW)	PI(kW)	TC(kW)	PI(kW)	TC(kW)	PI(kW)	TC(kW)	PI(kW)	TC(kW)	PI(kW)	TC(kW)	PI(kW)	TC(kW)	PI(kW)
2500	3500	5000			11000	110%	10	7.69	1.87	10.85	1.92	11.05	1.96	11.17	1.98	11.31	2.01	11.63	2.05	12.00	2.09
							12	7.69	1.92	10.55	1.96	10.77	2.01	10.90	2.03	11.05	2.05	11.38	2.09	11.76	2.14
							14	7.69	1.96	10.27	2.01	10.50	2.06	10.64	2.08	10.79	2.10	11.14	2.14	11.54	2.18
							16	7.69	2.01	10.00	2.06	10.25	2.11	10.39	2.13	10.55	2.15	10.91	2.19	11.33	2.23
							18	7.69	2.06	9.74	2.11	10.00	2.16	10.16	2.18	10.32	2.20	10.70	2.24	11.13	2.28
							20	7.69	2.12	9.49	2.16	9.77	2.21	9.93	2.23	10.11	2.25	10.50	2.29	10.95	2.33
							21	7.69	2.14	9.37	2.19	9.66	2.24	9.82	2.26	10.00	2.28	10.40	2.32	10.86	2.36
							23	7.69	2.20	9.14	2.25	9.45	2.29	9.62	2.31	9.80	2.33	10.22	2.37	10.69	2.41
							25	7.69	2.26	8.93	2.30	9.24	2.35	9.42	2.37	9.62	2.39	10.05	2.43	10.53	2.47
							27	7.69	2.31	8.72	2.36	9.06	2.40	9.24	2.42	9.44	2.45	9.89	2.49	10.39	2.53
							29	7.69	2.37	8.53	2.42	8.88	2.46	9.07	2.48	9.28	2.50	9.74	2.54	10.26	2.58
							31	7.69	2.43	8.35	2.48	8.71	2.52	8.92	2.54	9.13	2.56	9.61	2.60	10.14	2.64
							33	7.69	2.49	8.18	2.54	8.56	2.58	8.77	2.60	8.99	2.62	9.48	2.67	10.03	2.70
							35	7.69	2.56	8.03	2.60	8.42	2.65	8.70	2.66	8.87	2.69	9.37	2.73	9.93	2.77
							37	7.69	2.62	7.88	2.67	8.29	2.71	8.51	2.73	8.75	2.75	9.27	2.79	9.85	2.83
							39	7.69	2.69	7.75	2.73	8.17	2.78	8.41	2.80	8.65	2.82	9.19	2.86	9.78	2.89
							42	7.69	2.79	7.58	2.83	8.02	2.88	8.26	2.90	8.52	2.92	9.08	2.96	9.69	3.00
							44	7.69	2.86	7.47	2.90	7.93	2.95	8.19	2.97	8.45	2.99	9.02	3.03	9.65	3.06
							46	7.69	2.93	7.38	2.97	7.86	3.02	8.12	3.04	8.39	3.06	8.98	3.10	9.62	3.13
2500	3500	6800			12800	128%	10	8.01	1.95	11.29	2.00	11.51	2.05	11.64	2.07	11.78	2.10	12.11	2.14	12.50	2.18
							12	8.01	2.00	10.99	2.05	11.22	2.10	11.35	2.12	11.50	2.14	11.85	2.19	12.25	2.23
							14	8.01	2.05	10.69	2.10	10.94	2.15	11.08	2.17	11.24	2.19	11.60	2.24	12.02	2.28
							16	8.01	2.10	10.41	2.15	10.67	2.20	10.82	2.22	10.99	2.25	11.37	2.29	11.80	2.33
							18	8.01	2.16	10.14	2.21	10.42	2.25	10.58	2.28	10.75	2.30	11.14	2.34	11.59	2.38
							20	8.01	2.21	9.88	2.26	10.18	2.31	10.34	2.33	10.53	2.35	10.93	2.40	11.40	2.44
							21	8.01	2.24	9.76	2.29	10.06	2.34	10.23	2.36	10.42	2.38	10.83	2.42	11.31	2.47
							23	8.01	2.30	9.52	2.35	9.84	2.39	10.02	2.42	10.21	2.44	10.64	2.48	11.13	2.52
							25	8.01	2.36	9.30	2.40	9.63	2.45	9.81	2.47	10.02	2.50	10.46	2.54	10.97	2.58
							27	8.01	2.42	9.08	2.46	9.43	2.51	9.63	2.53	9.83	2.56	10.30	2.60	10.82	2.64
							29	8.01	2.48	8.88	2.53	9.25	2.57	9.45	2.59	9.67	2.62	10.14	2.66	10.68	2.70
							31	8.01	2.54	8.70	2.59	9.07	2.63	9.28	2.66	9.51	2.68	10.00	2.72	10.55	2.76
							33	8.01	2.61	8.52	2.65	8.91	2.70	9.13	2.72	9.37	2.74	9.87	2.79	10.44	2.83
							35	8.01	2.67	8.36	2.72	8.77	2.76	9.06	2.78	9.23	2.81	9.76	2.85	10.34	2.89
							37	8.01	2.74	8.21	2.79	8.63	2.83	8.87	2.85	9.12	2.88	9.66	2.92	10.25	2.96
							39	8.01	2.81	8.07	2.86	8.51	2.90	8.75	2.92	9.01	2.94	9.57	2.99	10.18	3.03
							42	8.01	2.91	7.89	2.96	8.35	3.01	8.61	3.03	8.87	3.05	9.45	3.09	10.09	3.13
							44	8.01	2.99	7.78	3.03	8.26	3.08	8.52	3.10	8.80	3.12	9.39	3.16	10.05	3.20
							46	8.01	3.06	7.69	3.11	8.18	3.15	8.45	3.17	8.74	3.19	9.35	3.24	10.02	3.28
2500	5000	5000			12500	125%	10	7.95	1.95	11.22	2.00	11.43	2.04	11.56	2.07	11.70	2.09	12.03	2.13	12.41	2.18
							12	7.95	1.99	10.91	2.04	11.14	2.09	11.28	2.11	11.43	2.14	11.77	2.18	12.17	2.22
							14	7.95	2.05	10.62	2.09	10.86	2.14	11.01	2.16	11.17	2.19	11.52	2.23	11.94	2.27
							16	7.95	2.10	10.34	2.15	10.60	2.19	10.75	2.22	10.92	2.24	11.29	2.28	11.72	2.32
							18	7.95	2.15	10.07	2.20	10.35	2.25	10.51	2.27	10.68	2.29	11.07	2.33	11.52	2.38
							20	7.95	2.21	9.82	2.25	10.11	2.30	10.27	2.32	10.46	2.34	10.86	2.39	11.32	2.43
							21	7.95	2.23	9.70	2.28	9.99	2.33	10.16	2.35	10.35	2.37	10.76	2.42	11.23	2.46
							23	7.95	2.29	9.46	2.34	9.77	2.38	9.95	2.41	10.14	2.43	10.57	2.47	11.06	2.51
							25	7.95	2.35	9.23	2.40	9.56	2.44	9.75	2.46	9.95	2.49	10.39	2.53	10.89	2.57
							27	7.95	2.41	9.02	2.46	9.37	2.50	9.56	2.52	9.77	2.55	10.23	2.59	10.75	2.63
							29	7.95	2.47	8.82	2.52	9.18	2.56	9.39	2.59	9.60	2.61	10.08	2.65	10.61	2.69
							31	7.95	2.53	8.64	2.58	9.01	2.63	9.22	2.65	9.45	2.67	9.94	2.71	10.48	2.75
							33	7.95	2.60	8.46	2.64	8.86	2.69	9.07	2.71	9.30	2.73	9.81	2.78	10.37	2.82
							35	7.95	2.66	8.30	2.71	8.71	2.75	9.00	2.77	9.17	2.80	9.69	2.84	10.27	2.88
							37	7.95	2.73	8.15	2.78	8.58	2.82	8.81	2.84	9.06	2.87	9.59	2.91	10.19	2.95
							39	7.95	2.80	8.02	2.85	8.46	2.89	8.70	2.91	8.95	2.93	9.50	2.97	10.11	3.01
							42	7.95	2.90	7.84	2.95	8.30	3.00	8.55	3.02	8.82	3.04	9.39	3.08	10.02	3.12
							44	7.95	2.98	7.73	3.02	8.21	3.07	8.47	3.09	8.74	3.11	9.33	3.15	9.98	3.19
							46	7.95	3.05	7.64	3.10	8.13	3.14	8.40	3.16	8.68	3.18	9.29	3.22	9.95	3.26
2500	5000	6800			14300	143%	10	10.52	1.92	10.94	1.96	11.36	2.00	11.57	2.02	11.78	2.05	12.22	2.09	12.65	2.13
							12	10.34	1.97	10.76	2.02	11.18	2.06	11.39	2.08	11.60	2.10	12.04	2.14	12.47	2.18
							14	10.16	2.03	10.57	2.07	11.00	2.11	11.21	2.13	11.42	2.15	11.86	2.19	12.30	2.23
							16	9.98	2.08	10.39	2.12	10.82	2.16	11.03	2.18	11.24	2.21	11.68	2.25	12.12	2.29
							18	9.80	2.13	10.21	2.18	10.64	2.22	10.85	2.24	11.06	2.26	11.50	2.30	11.94	2.34
							20	9.62	2.19	10.03	2.23	10.46	2.27	10.67	2.30	10.89	2.32	11.32	2.36	11.76	2.40
							21	9.52	2.22	9.94	2.26	10.37	2.30	10.58	2.32	10.80	2.34	11.23	2.39	11.68	2.43
							23	9.34	2.27	9.76	2.32	10.19	2.36	10.40	2.38	10.62	2.40	11.06	2.45	11.50	2.49
							25	9.17	2.33	9.58	2.37	10.01	2.42	10.23	2.44	10.44	2.46	10.88	2.50	11.32	2.55
							27	8.99	2.39	9.41	2.43	9.83	2.48	10.05	2.50	10.26	2.52	10.70	2.56	11.15	2.61
							29	8.81	2.45	9.23	2.49	9.65	2.54	9.87	2.56	10.09	2.58	10.53	2.62	10.97	2.67
							31	8.63	2.51	9.05	2.55	9.48	2.60	9.69	2.62	9.91	2.64	10.35	2.69	10.80	2.73
							33	8.45	2.57	8.87	2.62	9.30	2.66	9.52	2.68	9.74	2.70	10.18	2.75	10.63	2.79
							35	8.27	2.63	8.70	2.68	9.13	2.72	9.36	2.74	9.56	2.77	10.00	2.81	10.45	2.86
							37	8.10	2.70	8.52	2.74	8.95	2.79	9.17	2.81	9.39	2.83	9.83	2.88	10.28	2.92
							39	7.92	2.76	8.34	2.81	8.78	2.85	8.99	2.88	9.21	2.90	9.66	2.94	10.11	2.99
							42	7.66	2.86	8.08	2.91	8.51	2.95	8.73	2.97	8.95	3.00	9.40	3.04	9.85	3.09
							44	7.48	2.93	7.91	2.97	8.34	3.02	8.56	3.04	8.78	3.06	9.23	3.11	9.68	3.16
							46	7.31	3.00	7.73	3.04	8.17	3.09	8.39	3.11	8.61	3.13	9.05	3.18	9.51	3.23

* All figures comply with EN14511

1. Cooling capacity is based on 27°CDB / 19°CWB (indoor temperature), 35°CDB (outdoor temperature).
2. Heating capacity is based on 20°CDB (indoor temperature), 7°CDB/6°CWB (outdoor temperature).
3. Capacities are based on the following conditions : - Corresponding refrigerant piping length : 5m / - Level difference : 0m
4. The total ability of connected a indoor unit is up to 17.3kW
5. It is impossible to connect the indoor unit for one room only.
6. This data is reference data for temperature capacity trend.

7 AJ100FCJ5EH

1) Cooling

COOLING

Combination (Capacity Index)					Combination (Total)	Combination (%)	Outdoor Temperature (°C, DB)	Indoor Temperature(°C, WB)													
								14		16		18		19		20		22		24	
								TC(kW)	PI(kW)	TC(kW)	PI(kW)	TC(kW)	PI(kW)	TC(kW)	PI(kW)	TC(kW)	PI(kW)	TC(kW)	PI(kW)	TC(kW)	PI(kW)
2500	6800	6800			16100	161%	10	11.02	2.01	11.45	2.05	11.89	2.09	12.11	2.11	12.34	2.14	12.79	2.18	13.25	2.22
							12	10.83	2.06	11.26	2.10	11.70	2.15	11.92	2.17	12.15	2.19	12.60	2.23	13.06	2.28
							14	10.64	2.12	11.07	2.16	11.51	2.20	11.74	2.22	11.96	2.25	12.41	2.29	12.87	2.33
							16	10.45	2.17	10.88	2.21	11.32	2.26	11.55	2.28	11.77	2.30	12.23	2.35	12.69	2.39
							18	10.26	2.23	10.69	2.27	11.14	2.32	11.36	2.34	11.58	2.36	12.04	2.40	12.50	2.45
							20	10.07	2.29	10.50	2.33	10.95	2.37	11.17	2.40	11.40	2.42	11.85	2.46	12.32	2.51
							21	9.97	2.31	10.41	2.36	10.85	2.40	11.08	2.43	11.30	2.45	11.76	2.49	12.22	2.54
							23	9.78	2.37	10.22	2.42	10.67	2.46	10.89	2.49	11.12	2.51	11.58	2.55	12.04	2.60
							25	9.60	2.43	10.03	2.48	10.48	2.52	10.71	2.55	10.93	2.57	11.39	2.61	11.86	2.66
							27	9.41	2.50	9.85	2.54	10.29	2.59	10.52	2.61	10.75	2.63	11.21	2.68	11.67	2.72
							29	9.22	2.56	9.66	2.60	10.11	2.65	10.33	2.67	10.56	2.69	11.02	2.74	11.49	2.79
							31	9.03	2.62	9.48	2.67	9.92	2.71	10.15	2.74	10.38	2.76	10.84	2.80	11.31	2.85
							33	8.85	2.69	9.29	2.73	9.74	2.78	9.97	2.80	10.19	2.82	10.66	2.87	11.12	2.92
							35	8.66	2.75	9.11	2.80	9.55	2.84	9.80	2.86	10.01	2.89	10.47	2.94	10.94	2.98
							37	8.48	2.82	8.92	2.86	9.37	2.91	9.60	2.93	9.83	2.96	10.29	3.00	10.76	3.05
							39	8.29	2.88	8.74	2.93	9.19	2.98	9.42	3.00	9.65	3.02	10.11	3.07	10.58	3.12
							42	8.02	2.99	8.46	3.03	8.91	3.08	9.14	3.10	9.37	3.13	9.84	3.18	10.31	3.22
							44	7.83	3.06	8.28	3.10	8.73	3.15	8.96	3.18	9.19	3.20	9.66	3.25	10.13	3.29
							46	7.65	3.13	8.10	3.17	8.55	3.22	8.78	3.25	9.01	3.27	9.48	3.32	9.95	3.37
3500	3500	3500			10500	105%	10	7.90	1.86	11.14	1.91	11.36	1.95	11.48	1.98	11.62	2.00	11.95	2.04	12.33	2.08
							12	7.90	1.91	10.84	1.96	11.07	2.00	11.20	2.02	11.35	2.04	11.69	2.09	12.09	2.13
							14	7.90	1.96	10.55	2.00	10.79	2.05	10.93	2.07	11.09	2.09	11.45	2.13	11.86	2.17
							16	7.90	2.01	10.27	2.05	10.53	2.10	10.68	2.12	10.84	2.14	11.22	2.18	11.64	2.22
							18	7.90	2.06	10.01	2.10	10.28	2.15	10.44	2.17	10.61	2.19	11.00	2.23	11.44	2.27
							20	7.90	2.11	9.75	2.16	10.04	2.20	10.21	2.22	10.39	2.24	10.79	2.28	11.25	2.32
							21	7.90	2.14	9.63	2.18	9.93	2.23	10.10	2.25	10.28	2.27	10.69	2.31	11.16	2.35
							23	7.90	2.19	9.40	2.24	9.71	2.28	9.88	2.30	10.08	2.32	10.50	2.36	10.98	2.40
							25	7.90	2.25	9.17	2.29	9.50	2.34	9.68	2.36	9.88	2.38	10.32	2.42	10.82	2.46
							27	7.90	2.30	8.96	2.35	9.31	2.39	9.50	2.41	9.70	2.44	10.16	2.48	10.67	2.52
							29	7.90	2.36	8.77	2.41	9.12	2.45	9.32	2.47	9.54	2.49	10.01	2.53	10.54	2.57
							31	7.90	2.42	8.58	2.47	8.95	2.51	9.16	2.53	9.38	2.55	9.87	2.59	10.41	2.63
							33	7.90	2.48	8.41	2.53	8.80	2.57	9.01	2.59	9.24	2.61	9.74	2.66	10.30	2.69
							35	7.90	2.55	8.25	2.59	8.65	2.64	8.94	2.65	9.11	2.68	9.63	2.72	10.20	2.76
							37	7.90	2.61	8.10	2.66	8.52	2.70	8.75	2.72	8.99	2.74	9.53	2.78	10.12	2.82
							39	7.90	2.68	7.96	2.72	8.40	2.76	8.64	2.79	8.89	2.81	9.44	2.85	10.05	2.88
							42	7.90	2.78	7.78	2.82	8.24	2.87	8.49	2.89	8.76	2.91	9.33	2.95	9.96	2.98
							44	7.90	2.85	7.68	2.89	8.15	2.93	8.41	2.96	8.68	2.98	9.27	3.01	9.91	3.05
							46	7.90	2.92	7.59	2.96	8.08	3.00	8.34	3.03	8.62	3.05	9.22	3.08	9.88	3.12
3500	3500	5000			12000	120%	10	7.87	1.90	11.11	1.95	11.32	2.00	11.44	2.02	11.58	2.04	11.91	2.09	12.29	2.13
							12	7.87	1.95	10.81	2.00	11.03	2.05	11.16	2.07	11.31	2.09	11.65	2.13	12.05	2.18
							14	7.87	2.00	10.52	2.05	10.76	2.09	10.90	2.12	11.05	2.14	11.41	2.18	11.82	2.22
							16	7.87	2.05	10.24	2.10	10.49	2.15	10.64	2.17	10.81	2.19	11.18	2.23	11.60	2.27
							18	7.87	2.10	9.97	2.15	10.24	2.20	10.40	2.22	10.57	2.24	10.96	2.28	11.40	2.32
							20	7.87	2.16	9.72	2.20	10.01	2.25	10.17	2.27	10.35	2.29	10.75	2.34	11.21	2.38
							21	7.87	2.18	9.60	2.23	9.89	2.28	10.06	2.30	10.24	2.32	10.65	2.36	11.12	2.40
							23	7.87	2.24	9.36	2.29	9.67	2.33	9.85	2.35	10.04	2.38	10.47	2.42	10.95	2.46
							25	7.87	2.30	9.14	2.34	9.47	2.39	9.65	2.41	9.85	2.43	10.29	2.47	10.79	2.52
							27	7.87	2.36	8.93	2.40	9.27	2.45	9.47	2.47	9.67	2.49	10.13	2.53	10.64	2.57
							29	7.87	2.42	8.74	2.46	9.09	2.51	9.29	2.53	9.51	2.55	9.98	2.59	10.50	2.63
							31	7.87	2.48	8.55	2.52	8.92	2.57	9.13	2.59	9.35	2.61	9.84	2.65	10.38	2.69
							33	7.87	2.54	8.38	2.59	8.77	2.63	8.98	2.65	9.21	2.67	9.71	2.72	10.27	2.75
							35	7.87	2.60	8.22	2.65	8.62	2.70	8.91	2.71	9.08	2.74	9.60	2.78	10.17	2.82
							37	7.87	2.67	8.07	2.72	8.49	2.76	8.72	2.78	8.96	2.80	9.50	2.84	10.08	2.88
							39	7.87	2.74	7.94	2.78	8.37	2.83	8.61	2.85	8.86	2.87	9.41	2.91	10.01	2.95
							42	7.87	2.84	7.76	2.89	8.21	2.93	8.46	2.95	8.73	2.97	9.30	3.01	9.92	3.05
							44	7.87	2.91	7.65	2.96	8.13	3.00	8.38	3.02	8.65	3.04	9.24	3.08	9.88	3.12
							46	7.87	2.98	7.56	3.03	8.05	3.07	8.31	3.09	8.59	3.11	9.19	3.15	9.85	3.19
3500	3500	6800			13800	138%	10	10.41	1.99	10.82	2.03	11.24	2.07	11.45	2.09	11.66	2.11	12.08	2.15	12.52	2.20
							12	10.23	2.04	10.64	2.08	11.06	2.12	11.27	2.15	11.48	2.17	11.91	2.21	12.34	2.25
							14	10.05	2.09	10.46	2.14	10.88	2.18	11.09	2.20	11.30	2.22	11.73	2.26	12.16	2.31
							16	9.87	2.15	10.28	2.19	10.70	2.23	10.91	2.26	11.12	2.28	11.55	2.32	11.99	2.36
							18	9.69	2.20	10.10	2.25	10.52	2.29	10.73	2.31	10.95	2.33	11.38	2.38	11.81	2.42
							20	9.51	2.26	9.93	2.31	10.34	2.35	10.56	2.37	10.77	2.39	11.20	2.44	11.64	2.48
							21	9.42	2.29	9.84	2.33	10.26	2.38	10.47	2.40	10.68	2.42	11.11	2.47	11.55	2.51
							23	9.24	2.35	9.66	2.39	10.08	2.44	10.29	2.46	10.51	2.48	10.94	2.53	11.38	2.57
							25	9.07	2.41	9.48	2.45	9.90	2.50	10.12	2.52	10.33	2.54	10.76	2.59	11.20	2.63
							27	8.89	2.47	9.31	2.51	9.73	2.56	9.94	2.58	10.16	2.60	10.59	2.65	11.03	2.69
							29	8.71	2.53	9.13	2.58	9.55	2.62	9.77	2.64	9.98	2.67	10.42	2.71	10.86	2.76
							31	8.54	2.59	8.95	2.64	9.38	2.68	9.59	2.71	9.81	2.73	10.24	2.77	10.68	2.82
							33	8.36	2.66	8.78	2.70	9.20	2.75	9.42	2.77	9.63	2.79	10.07	2.84	10.51	2.88
							35	8.18	2.72	8.60	2.77	9.03	2.81	9.26	2.83	9.46	2.86	9.90	2.90	10.34	2.95
							37	8.01	2.79	8.43	2.83	8.85	2.88	9.07	2.90	9.29	2.93	9.72	2.97	10.17	3.02
							39	7.84	2.85	8.26	2.90	8.68	2.95	8.90	2.97	9.11	2.99	9.55	3.04	10.00	3.09
							42	7.57	2.96	8.00	3.00	8.42	3.05	8.64	3.07	8.86	3.10	9.30	3.14	9.74	3.19
							44	7.40	3.02	7.82	3.07	8.25	3.12	8.47	3.14	8.69	3.17	9.13	3.21	9.57	3.26
							46	7.23	3.09	7.65	3.14	8.08	3.19	8.30	3.21	8.52	3.24	8.96	3.28	9.40	3.33

* All figures comply with EN14511

1. Cooling capacity is based on 27°CDB / 19°CWB (indoor temperature), 35°CDB (outdoor temperature).
2. Heating capacity is based on 20°CDB (indoor temperature), 7°CDB/6°CWB (outdoor temperature).
3. Capacities are based on the following conditions : - Corresponding refrigerant piping length : 5m / - Level difference : 0m
4. The total ability of connected a indoor unit is up to 17.3kW
5. It is impossible to connect the indoor unit for one room only.
6. This data is reference data for temperature capacity trend.

1) Cooling

COOLING

Combination (Capacity Index)					Combination (Total)	Combination (%)	Outdoor Temperature (°C, DB)	Indoor Temperature(°C, WB)													
								14		16		18		19		20		22		24	
								TC(kW)	PI(kW)	TC(kW)	PI(kW)	TC(kW)	PI(kW)	TC(kW)	PI(kW)	TC(kW)	PI(kW)	TC(kW)	PI(kW)	TC(kW)	PI(kW)
3500	5000	5000			13500	135%	10	10.36	1.98	10.76	2.02	11.18	2.06	11.38	2.08	11.59	2.11	12.02	2.15	12.45	2.19
							12	10.18	2.03	10.58	2.07	11.00	2.12	11.21	2.14	11.42	2.16	11.84	2.20	12.27	2.24
							14	10.00	2.09	10.40	2.13	10.82	2.17	11.03	2.19	11.24	2.21	11.67	2.26	12.10	2.30
							16	9.82	2.14	10.23	2.18	10.64	2.23	10.85	2.25	11.06	2.27	11.49	2.31	11.92	2.36
							18	9.64	2.20	10.05	2.24	10.47	2.28	10.68	2.30	10.89	2.33	11.32	2.37	11.75	2.41
							20	9.46	2.25	9.87	2.30	10.29	2.34	10.50	2.36	10.71	2.38	11.14	2.43	11.58	2.47
							21	9.37	2.28	9.78	2.33	10.20	2.37	10.41	2.39	10.62	2.41	11.05	2.46	11.49	2.50
							23	9.20	2.34	9.61	2.38	10.02	2.43	10.24	2.45	10.45	2.47	10.88	2.52	11.32	2.56
							25	9.02	2.40	9.43	2.44	9.85	2.49	10.06	2.51	10.27	2.53	10.71	2.58	11.14	2.62
							27	8.84	2.46	9.26	2.50	9.67	2.55	9.89	2.57	10.10	2.59	10.53	2.64	10.97	2.68
							29	8.67	2.52	9.08	2.57	9.50	2.61	9.71	2.63	9.93	2.66	10.36	2.70	10.80	2.75
							31	8.49	2.58	8.91	2.63	9.33	2.67	9.54	2.70	9.75	2.72	10.19	2.76	10.63	2.81
							33	8.32	2.65	8.73	2.69	9.15	2.74	9.37	2.76	9.58	2.78	10.01	2.83	10.46	2.87
							35	8.14	2.71	8.56	2.76	8.98	2.80	9.21	2.82	9.41	2.85	9.84	2.89	10.28	2.94
							37	7.97	2.78	8.38	2.82	8.81	2.87	9.02	2.89	9.24	2.92	9.67	2.96	10.11	3.01
							39	7.79	2.84	8.21	2.89	8.64	2.94	8.85	2.96	9.07	2.98	9.50	3.03	9.94	3.07
							42	7.53	2.94	7.95	2.99	8.38	3.04	8.59	3.06	8.81	3.08	9.25	3.13	9.69	3.18
							44	7.36	3.01	7.78	3.06	8.21	3.11	8.42	3.13	8.64	3.15	9.08	3.20	9.52	3.25
							46	7.19	3.08	7.61	3.13	8.04	3.18	8.25	3.20	8.47	3.22	8.91	3.27	9.35	3.32
3500	5000	6800			15300	153%	10	11.02	1.96	11.45	2.01	11.89	2.05	12.11	2.07	12.34	2.09	12.79	2.13	13.25	2.17
							12	10.83	2.02	11.26	2.06	11.70	2.10	11.92	2.12	12.15	2.14	12.60	2.19	13.06	2.23
							14	10.64	2.07	11.07	2.11	11.51	2.16	11.74	2.18	11.96	2.20	12.41	2.24	12.87	2.28
							16	10.45	2.13	10.88	2.17	11.32	2.21	11.55	2.23	11.77	2.25	12.23	2.30	12.69	2.34
							18	10.26	2.18	10.69	2.22	11.14	2.27	11.36	2.29	11.58	2.31	12.04	2.35	12.50	2.40
							20	10.07	2.24	10.50	2.28	10.95	2.32	11.17	2.35	11.40	2.37	11.85	2.41	12.32	2.45
							21	9.97	2.27	10.41	2.31	10.85	2.35	11.08	2.37	11.30	2.40	11.76	2.44	12.22	2.48
							23	9.78	2.32	10.22	2.37	10.67	2.41	10.89	2.43	11.12	2.46	11.58	2.50	12.04	2.54
							25	9.60	2.38	10.03	2.43	10.48	2.47	10.71	2.49	10.93	2.51	11.39	2.56	11.86	2.60
							27	9.41	2.44	9.85	2.49	10.29	2.53	10.52	2.55	10.75	2.58	11.21	2.62	11.67	2.66
							29	9.22	2.50	9.66	2.55	10.11	2.59	10.33	2.62	10.56	2.64	11.02	2.68	11.49	2.73
							31	9.03	2.57	9.48	2.61	9.92	2.66	10.15	2.68	10.38	2.70	10.84	2.75	11.31	2.79
							33	8.85	2.63	9.29	2.67	9.74	2.72	9.97	2.74	10.19	2.76	10.66	2.81	11.12	2.85
							35	8.66	2.69	9.11	2.74	9.55	2.78	9.80	2.80	10.01	2.83	10.47	2.87	10.94	2.92
							37	8.48	2.76	8.92	2.80	9.37	2.85	9.60	2.87	9.83	2.89	10.29	2.94	10.76	2.99
							39	8.29	2.82	8.74	2.87	9.19	2.92	9.42	2.94	9.65	2.96	10.11	3.01	10.58	3.05
							42	8.02	2.92	8.46	2.97	8.91	3.02	9.14	3.04	9.37	3.06	9.84	3.11	10.31	3.16
							44	7.83	2.99	8.28	3.04	8.73	3.09	8.96	3.11	9.19	3.13	9.66	3.18	10.13	3.23
							46	7.65	3.06	8.10	3.11	8.55	3.16	8.78	3.18	9.01	3.20	9.48	3.25	9.95	3.30
3500	6800	6800			17100	171%	10	11.02	2.04	11.45	2.09	11.89	2.13	12.11	2.15	12.34	2.17	12.79	2.22	13.25	2.26
							12	10.83	2.10	11.26	2.14	11.70	2.18	11.92	2.21	12.15	2.23	12.60	2.27	13.06	2.32
							14	10.64	2.15	11.07	2.20	11.51	2.24	11.74	2.26	11.96	2.28	12.41	2.33	12.87	2.37
							16	10.45	2.21	10.88	2.25	11.32	2.30	11.55	2.32	11.77	2.34	12.23	2.39	12.69	2.43
							18	10.26	2.27	10.69	2.31	11.14	2.36	11.36	2.38	11.58	2.40	12.04	2.45	12.50	2.49
							20	10.07	2.33	10.50	2.37	10.95	2.42	11.17	2.44	11.40	2.46	11.85	2.51	12.32	2.55
							21	9.97	2.36	10.41	2.40	10.85	2.45	11.08	2.47	11.30	2.49	11.76	2.54	12.22	2.58
							23	9.78	2.42	10.22	2.46	10.67	2.51	10.89	2.53	11.12	2.55	11.58	2.60	12.04	2.64
							25	9.60	2.48	10.03	2.52	10.48	2.57	10.71	2.59	10.93	2.61	11.39	2.66	11.86	2.71
							27	9.41	2.54	9.85	2.58	10.29	2.63	10.52	2.65	10.75	2.68	11.21	2.72	11.67	2.77
							29	9.22	2.60	9.66	2.65	10.11	2.69	10.33	2.72	10.56	2.74	11.02	2.79	11.49	2.83
							31	9.03	2.67	9.48	2.71	9.92	2.76	10.15	2.78	10.38	2.81	10.84	2.85	11.31	2.90
							33	8.85	2.73	9.29	2.78	9.74	2.83	9.97	2.85	10.19	2.87	10.66	2.92	11.12	2.97
							35	8.66	2.80	9.11	2.85	9.55	2.89	9.80	2.91	10.01	2.94	10.47	2.99	10.94	3.03
							37	8.48	2.87	8.92	2.91	9.37	2.96	9.60	2.98	9.83	3.01	10.29	3.06	10.76	3.10
							39	8.29	2.93	8.74	2.98	9.19	3.03	9.42	3.05	9.65	3.08	10.11	3.13	10.58	3.17
							42	8.02	3.04	8.46	3.09	8.91	3.14	9.14	3.16	9.37	3.18	9.84	3.23	10.31	3.28
							44	7.83	3.11	8.28	3.16	8.73	3.21	8.96	3.23	9.19	3.26	9.66	3.30	10.13	3.35
							46	7.65	3.18	8.10	3.23	8.55	3.28	8.78	3.30	9.01	3.33	9.48	3.38	9.95	3.43
5000	5000	5000			15000	150%	10	11.02	1.96	11.45	2.00	11.89	2.04	12.11	2.06	12.34	2.08	12.79	2.12	13.25	2.17
							12	10.83	2.01	11.26	2.05	11.70	2.09	11.92	2.12	12.15	2.14	12.60	2.18	13.06	2.22
							14	10.64	2.06	11.07	2.11	11.51	2.15	11.74	2.17	11.96	2.19	12.41	2.23	12.87	2.27
							16	10.45	2.12	10.88	2.16	11.32	2.20	11.55	2.22	11.77	2.25	12.23	2.29	12.69	2.33
							18	10.26	2.17	10.69	2.22	11.14	2.26	11.36	2.28	11.58	2.30	12.04	2.34	12.50	2.39
							20	10.07	2.23	10.50	2.27	10.95	2.32	11.17	2.34	11.40	2.36	11.85	2.40	12.32	2.45
							21	9.97	2.26	10.41	2.30	10.85	2.34	11.08	2.37	11.30	2.39	11.76	2.43	12.22	2.47
							23	9.78	2.32	10.22	2.36	10.67	2.40	10.89	2.42	11.12	2.45	11.58	2.49	12.04	2.53
							25	9.60	2.37	10.03	2.42	10.48	2.46	10.71	2.48	10.93	2.51	11.39	2.55	11.86	2.59
							27	9.41	2.43	9.85	2.48	10.29	2.52	10.52	2.54	10.75	2.57	11.21	2.61	11.67	2.65
							29	9.22	2.49	9.66	2.54	10.11	2.58	10.33	2.61	10.56	2.63	11.02	2.67	11.49	2.72
							31	9.03	2.56	9.48	2.60	9.92	2.65	10.15	2.67	10.38	2.69	10.84	2.74	11.31	2.78
							33	8.85	2.62	9.29	2.66	9.74	2.71	9.97	2.73	10.19	2.75	10.66	2.80	11.12	2.84
							35	8.66	2.68	9.11	2.73	9.55	2.77	9.80	2.79	10.01	2.82	10.47	2.86	10.94	2.91
							37	8.48	2.75	8.92	2.79	9.37	2.84	9.60	2.86	9.83	2.88	10.29	2.93	10.76	2.98
							39	8.29	2.81	8.74	2.86	9.19	2.90	9.42	2.93	9.65	2.95	10.11	3.00	10.58	3.04
							42	8.02	2.91	8.46	2.96	8.91	3.01	9.14	3.03	9.37	3.05	9.84	3.10	10.31	3.14
							44	7.83	2.98	8.28	3.03	8.73	3.07	8.96	3.10	9.19	3.12	9.66	3.17	10.13	3.21
							46	7.65	3.05	8.10	3.10	8.55	3.14	8.78	3.17	9.01	3.19	9.48	3.24	9.95	3.28

* All figures comply with EN14511

1. Cooling capacity is based on 27°CDB / 19°CWB (indoor temperature), 35°CDB (outdoor temperature).
2. Heating capacity is based on 20°CDB (indoor temperature), 7°CDB/6°CWB (outdoor temperature).
3. Capacities are based on the following conditions : - Corresponding refrigerant piping length : 5m / - Level difference : 0m
4. The total ability of connected a indoor unit is up to 17.3kW
5. It is impossible to connect the indoor unit for one room only.
6. This data is reference data for temperature capacity trend.

7 AJ100FCJ5EH

1) Cooling

COOLING

Combination (Capacity Index)					Combination (Total)	Combination (%)	Outdoor Temperature (°C, DB)	Indoor Temperature(°C, WB)													
								14		16		18		19		20		22		24	
								TC(kW)	PI(kW)	TC(kW)	PI(kW)	TC(kW)	PI(kW)	TC(kW)	PI(kW)	TC(kW)	PI(kW)	TC(kW)	PI(kW)	TC(kW)	PI(kW)
5000	5000	6800			16800	168%	10	11.02	2.04	11.45	2.09	11.89	2.13	12.11	2.15	12.34	2.17	12.79	2.22	13.25	2.26
							12	10.83	2.10	11.26	2.14	11.70	2.18	11.92	2.21	12.15	2.23	12.60	2.27	13.06	2.32
							14	10.64	2.15	11.07	2.20	11.51	2.24	11.74	2.26	11.96	2.28	12.41	2.33	12.87	2.37
							16	10.45	2.21	10.88	2.25	11.32	2.30	11.55	2.32	11.77	2.34	12.23	2.39	12.69	2.43
							18	10.26	2.27	10.69	2.31	11.14	2.36	11.36	2.38	11.58	2.40	12.04	2.45	12.50	2.49
							20	10.07	2.33	10.50	2.37	10.95	2.42	11.17	2.44	11.40	2.46	11.85	2.51	12.32	2.55
							21	9.97	2.36	10.41	2.40	10.85	2.45	11.08	2.47	11.30	2.49	11.76	2.54	12.22	2.58
							23	9.78	2.42	10.22	2.46	10.67	2.51	10.89	2.53	11.12	2.55	11.58	2.60	12.04	2.64
							25	9.60	2.48	10.03	2.52	10.48	2.57	10.71	2.59	10.93	2.61	11.39	2.66	11.86	2.71
							27	9.41	2.54	9.85	2.58	10.29	2.63	10.52	2.65	10.75	2.68	11.21	2.72	11.67	2.77
							29	9.22	2.60	9.66	2.65	10.11	2.69	10.33	2.72	10.56	2.74	11.02	2.79	11.49	2.83
							31	9.03	2.67	9.48	2.71	9.92	2.76	10.15	2.78	10.38	2.81	10.84	2.85	11.31	2.90
							33	8.85	2.73	9.29	2.78	9.74	2.83	9.97	2.85	10.19	2.87	10.66	2.92	11.12	2.97
							35	8.66	2.80	9.11	2.85	9.55	2.89	9.80	2.91	10.01	2.94	10.47	2.99	10.94	3.03
							37	8.48	2.87	8.92	2.91	9.37	2.96	9.60	2.98	9.83	3.01	10.29	3.06	10.76	3.10
							39	8.29	2.93	8.74	2.98	9.19	3.03	9.42	3.05	9.65	3.08	10.11	3.13	10.58	3.17
							42	8.02	3.04	8.46	3.09	8.91	3.14	9.14	3.16	9.37	3.18	9.84	3.23	10.31	3.28
							44	7.83	3.11	8.28	3.16	8.73	3.21	8.96	3.23	9.19	3.26	9.66	3.30	10.13	3.35
							46	7.65	3.18	8.10	3.23	8.55	3.28	8.78	3.30	9.01	3.33	9.48	3.38	9.95	3.43
2000	2000	2000	2000		8000	80%	10	7.07	1.67	9.97	1.71	10.16	1.76	10.28	1.78	10.40	1.79	10.69	1.83	11.03	1.87
							12	7.07	1.71	9.70	1.76	9.90	1.80	10.02	1.82	10.16	1.84	10.46	1.87	10.82	1.91
							14	7.07	1.76	9.44	1.80	9.66	1.84	9.79	1.86	9.93	1.88	10.24	1.92	10.61	1.95
							16	7.07	1.80	9.19	1.84	9.42	1.88	9.56	1.90	9.70	1.92	10.04	1.96	10.42	2.00
							18	7.07	1.85	8.95	1.89	9.20	1.93	9.34	1.95	9.49	1.97	9.84	2.01	10.24	2.04
							20	7.07	1.89	8.73	1.94	8.99	1.98	9.13	2.00	9.29	2.01	9.65	2.05	10.06	2.09
							21	7.07	1.92	8.62	1.96	8.88	2.00	9.03	2.02	9.20	2.04	9.57	2.08	9.98	2.11
							23	7.07	1.97	8.41	2.01	8.69	2.05	8.84	2.07	9.02	2.09	9.40	2.12	9.83	2.16
							25	7.07	2.02	8.21	2.06	8.50	2.10	8.67	2.12	8.84	2.14	9.24	2.17	9.68	2.21
							27	7.07	2.07	8.02	2.11	8.33	2.15	8.50	2.17	8.68	2.19	9.09	2.22	9.55	2.26
							29	7.07	2.12	7.84	2.16	8.16	2.20	8.34	2.22	8.53	2.24	8.96	2.28	9.43	2.31
							31	7.07	2.18	7.68	2.22	8.01	2.26	8.20	2.27	8.40	2.29	8.83	2.33	9.32	2.36
							33	7.07	2.23	7.52	2.27	7.87	2.31	8.06	2.33	8.27	2.35	8.72	2.38	9.22	2.42
							35	7.07	2.29	7.38	2.33	7.74	2.37	8.00	2.38	8.15	2.40	8.62	2.44	9.13	2.47
							37	7.07	2.35	7.25	2.39	7.62	2.42	7.83	2.44	8.05	2.46	8.53	2.50	9.05	2.53
							39	7.07	2.40	7.13	2.44	7.52	2.48	7.73	2.50	7.96	2.52	8.45	2.56	8.99	2.59
							42	7.07	2.50	6.97	2.54	7.38	2.57	7.60	2.59	7.84	2.61	8.35	2.65	8.91	2.68
							44	7.07	2.56	6.87	2.60	7.30	2.64	7.53	2.65	7.77	2.67	8.30	2.71	8.87	2.74
							46	7.07	2.62	6.79	2.66	7.23	2.70	7.46	2.72	7.72	2.74	8.25	2.77	8.85	2.80
2000	2000	2000	2500		8500	85%	10	7.51	1.77	10.60	1.82	10.80	1.86	10.92	1.88	11.05	1.90	11.36	1.94	11.72	1.98
							12	7.51	1.81	10.31	1.86	10.52	1.90	10.65	1.92	10.79	1.94	11.12	1.98	11.49	2.02
							14	7.51	1.86	10.03	1.91	10.26	1.95	10.40	1.97	10.55	1.99	10.88	2.03	11.28	2.07
							16	7.51	1.91	9.77	1.95	10.01	1.99	10.15	2.02	10.31	2.04	10.66	2.08	11.07	2.11
							18	7.51	1.96	9.51	2.00	9.77	2.04	9.92	2.06	10.09	2.08	10.45	2.12	10.88	2.16
							20	7.51	2.01	9.27	2.05	9.55	2.09	9.70	2.11	9.87	2.13	10.26	2.17	10.69	2.21
							21	7.51	2.03	9.16	2.08	9.44	2.12	9.60	2.14	9.77	2.16	10.16	2.20	10.61	2.24
							23	7.51	2.08	8.93	2.13	9.23	2.17	9.40	2.19	9.58	2.21	9.98	2.25	10.44	2.29
							25	7.51	2.14	8.72	2.18	9.03	2.22	9.21	2.24	9.40	2.26	9.82	2.30	10.29	2.34
							27	7.51	2.19	8.52	2.23	8.85	2.28	9.03	2.30	9.23	2.32	9.66	2.36	10.15	2.39
							29	7.51	2.25	8.33	2.29	8.67	2.33	8.86	2.35	9.07	2.37	9.52	2.41	10.02	2.45
							31	7.51	2.30	8.16	2.35	8.51	2.39	8.71	2.41	8.92	2.43	9.38	2.47	9.90	2.50
							33	7.51	2.36	7.99	2.41	8.36	2.45	8.57	2.47	8.79	2.49	9.26	2.52	9.80	2.56
							35	7.51	2.42	7.84	2.46	8.23	2.51	8.50	2.52	8.66	2.55	9.16	2.58	9.70	2.62
							37	7.51	2.48	7.70	2.53	8.10	2.57	8.32	2.59	8.55	2.61	9.06	2.64	9.62	2.68
							39	7.51	2.55	7.57	2.59	7.99	2.63	8.21	2.65	8.45	2.67	8.97	2.71	9.55	2.74
							42	7.51	2.64	7.40	2.68	7.84	2.72	8.07	2.74	8.33	2.76	8.87	2.80	9.47	2.84
							44	7.51	2.71	7.30	2.75	7.75	2.79	8.00	2.81	8.26	2.83	8.81	2.87	9.43	2.90
							46	7.51	2.78	7.21	2.82	7.68	2.86	7.93	2.88	8.20	2.90	8.77	2.93	9.40	2.97
2000	2000	2000	3500		9500	95%	10	7.76	1.84	10.95	1.89	11.15	1.93	11.28	1.95	11.42	1.98	11.73	2.02	12.11	2.06
							12	7.76	1.89	10.65	1.93	10.87	1.98	11.00	2.00	11.15	2.02	11.48	2.06	11.87	2.10
							14	7.76	1.93	10.36	1.98	10.60	2.03	10.74	2.05	10.89	2.07	11.24	2.11	11.65	2.15
							16	7.76	1.98	10.09	2.03	10.34	2.07	10.49	2.10	10.65	2.12	11.01	2.16	11.44	2.20
							18	7.76	2.03	9.83	2.08	10.10	2.12	10.25	2.15	10.42	2.17	10.80	2.21	11.23	2.25
							20	7.76	2.09	9.58	2.13	9.86	2.18	10.02	2.20	10.20	2.22	10.60	2.26	11.05	2.30
							21	7.76	2.11	9.46	2.16	9.75	2.20	9.92	2.22	10.10	2.24	10.50	2.29	10.96	2.32
							23	7.76	2.17	9.23	2.21	9.53	2.26	9.71	2.28	9.90	2.30	10.31	2.34	10.79	2.38
							25	7.76	2.22	9.01	2.27	9.33	2.31	9.51	2.33	9.71	2.35	10.14	2.39	10.63	2.43
							27	7.76	2.28	8.80	2.32	9.14	2.37	9.33	2.39	9.53	2.41	9.98	2.45	10.48	2.49
							29	7.76	2.34	8.61	2.38	8.96	2.42	9.16	2.45	9.37	2.47	9.83	2.51	10.35	2.54
							31	7.76	2.40	8.43	2.44	8.79	2.48	9.00	2.50	9.22	2.52	9.69	2.56	10.23	2.60
							33	7.76	2.46	8.26	2.50	8.64	2.54	8.85	2.56	9.08	2.59	9.57	2.62	10.12	2.66
							35	7.76	2.52	8.10	2.56	8.50	2.61	8.78	2.62	8.95	2.65	9.46	2.69	10.02	2.72
							37	7.76	2.58	7.95	2.63	8.37	2.67	8.59	2.69	8.83	2.71	9.36	2.75	9.94	2.79
							39	7.76	2.65	7.82	2.69	8.25	2.73	8.48	2.75	8.73	2.77	9.27	2.81	9.87	2.85
							42	7.76	2.75	7.64	2.79	8.09	2.83	8.34	2.85	8.60	2.87	9.16	2.91	9.78	2.95
							44	7.76	2.82	7.54	2.86	8.01	2.90	8.26	2.92	8.53	2.94	9.10	2.98	9.74	3.02
							46	7.76	2.89	7.45	2.93	7.93	2.97	8.19	2.99	8.47	3.01	9.06	3.05	9.71	3.09

* All figures comply with EN14511

1. Cooling capacity is based on 27°CDB / 19°CWB (indoor temperature), 35°CDB (outdoor temperature).
2. Heating capacity is based on 20°CDB (indoor temperature), 7°CDB/6°CWB (outdoor temperature).
3. Capacities are based on the following conditions : - Corresponding refrigerant piping length : 5m / - Level difference : 0m
4. The total ability of connected a indoor unit is up to 17.3kW
5. It is impossible to connect the indoor unit for one room only.
6. This data is reference data for temperature capacity trend.

1) Cooling

COOLING

Combination (Capacity Index)					Combination (Total)	Combination (%)	Outdoor Temperature (°C, DB)	Indoor Temperature(°C, WB)													
								14		16		18		19		20		22		24	
								TC(kW)	PI(kW)	TC(kW)	PI(kW)	TC(kW)	PI(kW)	TC(kW)	PI(kW)	TC(kW)	PI(kW)	TC(kW)	PI(kW)	TC(kW)	PI(kW)
2000	2000	2000	5000		11000	110%	10	7.68	1.89	10.83	1.94	11.04	1.98	11.16	2.01	11.30	2.03	11.61	2.07	11.99	2.11
							12	7.68	1.94	10.54	1.98	10.76	2.03	10.89	2.05	11.03	2.08	11.36	2.12	11.75	2.16
							14	7.68	1.99	10.26	2.03	10.49	2.08	10.63	2.10	10.78	2.12	11.13	2.17	11.53	2.21
							16	7.68	2.04	9.99	2.08	10.24	2.13	10.38	2.15	10.54	2.17	10.90	2.22	11.32	2.26
							18	7.68	2.09	9.73	2.14	9.99	2.18	10.14	2.20	10.31	2.22	10.69	2.27	11.12	2.31
							20	7.68	2.14	9.48	2.19	9.76	2.23	9.92	2.26	10.10	2.28	10.49	2.32	10.93	2.36
							21	7.68	2.17	9.36	2.22	9.65	2.26	9.81	2.28	9.99	2.30	10.39	2.35	10.84	2.39
							23	7.68	2.22	9.13	2.27	9.44	2.32	9.61	2.34	9.79	2.36	10.21	2.40	10.68	2.44
							25	7.68	2.28	8.92	2.33	9.23	2.37	9.41	2.39	9.61	2.42	10.04	2.46	10.52	2.50
							27	7.68	2.34	8.71	2.38	9.05	2.43	9.23	2.45	9.43	2.47	9.88	2.51	10.38	2.55
							29	7.68	2.40	8.52	2.44	8.87	2.49	9.06	2.51	9.27	2.53	9.73	2.57	10.24	2.61
							31	7.68	2.46	8.34	2.51	8.70	2.55	8.91	2.57	9.12	2.59	9.59	2.63	10.12	2.67
							33	7.68	2.52	8.17	2.57	8.55	2.61	8.76	2.63	8.98	2.65	9.47	2.70	10.02	2.73
							35	7.68	2.59	8.02	2.63	8.41	2.68	8.69	2.69	8.86	2.72	9.36	2.76	9.92	2.80
							37	7.68	2.65	7.87	2.70	8.28	2.74	8.51	2.76	8.74	2.78	9.26	2.82	9.84	2.86
							39	7.68	2.72	7.74	2.76	8.16	2.81	8.40	2.83	8.64	2.85	9.18	2.89	9.76	2.93
							42	7.68	2.82	7.57	2.87	8.01	2.91	8.25	2.93	8.51	2.95	9.07	2.99	9.68	3.03
							44	7.68	2.89	7.46	2.94	7.92	2.98	8.18	3.00	8.44	3.02	9.01	3.06	9.64	3.10
							46	7.68	2.96	7.38	3.01	7.85	3.05	8.11	3.07	8.38	3.09	8.97	3.13	9.61	3.17
2000	2000	2000	6800		12800	128%	10	8.02	1.97	11.32	2.02	11.53	2.06	11.66	2.09	11.81	2.11	12.14	2.16	12.52	2.20
							12	8.02	2.02	11.01	2.07	11.24	2.11	11.38	2.14	11.53	2.16	11.87	2.20	12.28	2.25
							14	8.02	2.07	10.72	2.12	10.96	2.16	11.11	2.19	11.27	2.21	11.63	2.25	12.05	2.30
							16	8.02	2.12	10.43	2.17	10.69	2.22	10.85	2.24	11.01	2.26	11.39	2.31	11.83	2.35
							18	8.02	2.17	10.16	2.22	10.44	2.27	10.60	2.29	10.77	2.32	11.17	2.36	11.62	2.40
							20	8.02	2.23	9.91	2.28	10.20	2.32	10.37	2.35	10.55	2.37	10.96	2.41	11.42	2.46
							21	8.02	2.26	9.78	2.31	10.08	2.35	10.25	2.38	10.44	2.40	10.86	2.44	11.33	2.48
							23	8.02	2.31	9.54	2.36	9.86	2.41	10.04	2.43	10.23	2.46	10.67	2.50	11.16	2.54
							25	8.02	2.37	9.32	2.42	9.65	2.47	9.84	2.49	10.04	2.51	10.49	2.56	10.99	2.60
							27	8.02	2.43	9.10	2.48	9.45	2.53	9.65	2.55	9.86	2.57	10.32	2.62	10.84	2.66
							29	8.02	2.50	8.90	2.54	9.27	2.59	9.47	2.61	9.69	2.64	10.17	2.68	10.70	2.72
							31	8.02	2.56	8.71	2.61	9.09	2.65	9.30	2.68	9.53	2.70	10.03	2.74	10.58	2.78
							33	8.02	2.62	8.54	2.67	8.93	2.72	9.15	2.74	9.39	2.76	9.90	2.81	10.46	2.85
							35	8.02	2.69	8.38	2.74	8.79	2.78	9.08	2.80	9.25	2.83	9.78	2.87	10.36	2.91
							37	8.02	2.76	8.23	2.81	8.65	2.85	8.89	2.87	9.14	2.90	9.68	2.94	10.28	2.98
							39	8.02	2.83	8.09	2.88	8.53	2.92	8.77	2.94	9.03	2.96	9.59	3.01	10.20	3.05
							42	8.02	2.94	7.91	2.98	8.37	3.03	8.63	3.05	8.89	3.07	9.47	3.11	10.11	3.15
							44	8.02	3.01	7.80	3.06	8.28	3.10	8.54	3.12	8.82	3.14	9.42	3.19	10.07	3.23
							46	8.02	3.08	7.71	3.13	8.20	3.17	8.47	3.20	8.76	3.22	9.37	3.26	10.04	3.30
2000	2000	2500	2500		9000	90%	10	7.69	1.84	10.85	1.89	11.05	1.93	11.17	1.95	11.31	1.98	11.63	2.02	12.00	2.06
							12	7.69	1.89	10.55	1.93	10.77	1.98	10.90	2.00	11.05	2.02	11.38	2.06	11.76	2.10
							14	7.69	1.93	10.27	1.98	10.50	2.03	10.64	2.05	10.79	2.07	11.14	2.11	11.54	2.15
							16	7.69	1.98	10.00	2.03	10.25	2.07	10.39	2.10	10.55	2.12	10.91	2.16	11.33	2.20
							18	7.69	2.03	9.74	2.08	10.00	2.12	10.16	2.15	10.32	2.17	10.70	2.21	11.13	2.25
							20	7.69	2.09	9.49	2.13	9.77	2.18	9.93	2.20	10.11	2.22	10.50	2.26	10.95	2.30
							21	7.69	2.11	9.37	2.16	9.66	2.20	9.82	2.22	10.00	2.24	10.40	2.29	10.86	2.32
							23	7.69	2.17	9.14	2.21	9.45	2.26	9.62	2.28	9.80	2.30	10.22	2.34	10.69	2.38
							25	7.69	2.22	8.93	2.27	9.24	2.31	9.42	2.33	9.62	2.35	10.05	2.39	10.53	2.43
							27	7.69	2.28	8.72	2.32	9.06	2.37	9.24	2.39	9.44	2.41	9.89	2.45	10.39	2.49
							29	7.69	2.34	8.53	2.38	8.88	2.42	9.07	2.45	9.28	2.47	9.74	2.51	10.26	2.54
							31	7.69	2.40	8.35	2.44	8.71	2.48	8.92	2.50	9.13	2.52	9.61	2.56	10.14	2.60
							33	7.69	2.46	8.18	2.50	8.56	2.54	8.77	2.56	8.99	2.59	9.48	2.62	10.03	2.66
							35	7.69	2.52	8.03	2.56	8.42	2.61	8.70	2.62	8.87	2.65	9.37	2.69	9.93	2.72
							37	7.69	2.58	7.88	2.63	8.29	2.67	8.51	2.69	8.75	2.71	9.27	2.75	9.85	2.79
							39	7.69	2.65	7.75	2.69	8.17	2.73	8.41	2.75	8.65	2.77	9.19	2.81	9.78	2.85
							42	7.69	2.75	7.58	2.79	8.02	2.83	8.26	2.85	8.52	2.87	9.08	2.91	9.69	2.95
							44	7.69	2.82	7.47	2.86	7.93	2.90	8.19	2.92	8.45	2.94	9.02	2.98	9.65	3.02
							46	7.69	2.89	7.38	2.93	7.86	2.97	8.12	2.99	8.39	3.01	8.98	3.05	9.62	3.09
2000	2000	2500	3500		10000	100%	10	7.82	1.84	11.03	1.89	11.24	1.93	11.37	1.95	11.51	1.98	11.83	2.02	12.21	2.06
							12	7.82	1.89	10.73	1.93	10.96	1.98	11.09	2.00	11.24	2.02	11.57	2.06	11.97	2.10
							14	7.82	1.93	10.44	1.98	10.68	2.03	10.82	2.05	10.98	2.07	11.33	2.11	11.74	2.15
							16	7.82	1.98	10.17	2.03	10.42	2.07	10.57	2.10	10.73	2.12	11.10	2.16	11.53	2.20
							18	7.82	2.03	9.91	2.08	10.18	2.12	10.33	2.15	10.50	2.17	10.88	2.21	11.32	2.25
							20	7.82	2.09	9.65	2.13	9.94	2.18	10.10	2.20	10.28	2.22	10.68	2.26	11.13	2.30
							21	7.82	2.11	9.53	2.16	9.83	2.20	9.99	2.22	10.18	2.24	10.58	2.29	11.04	2.32
							23	7.82	2.17	9.30	2.21	9.61	2.26	9.78	2.28	9.97	2.30	10.39	2.34	10.87	2.38
							25	7.82	2.22	9.08	2.27	9.40	2.31	9.59	2.33	9.78	2.35	10.22	2.39	10.71	2.43
							27	7.82	2.28	8.87	2.32	9.21	2.37	9.40	2.39	9.61	2.41	10.06	2.45	10.57	2.49
							29	7.82	2.34	8.68	2.38	9.03	2.42	9.23	2.45	9.44	2.47	9.91	2.51	10.43	2.54
							31	7.82	2.40	8.49	2.44	8.86	2.48	9.07	2.50	9.29	2.52	9.77	2.56	10.31	2.60
							33	7.82	2.46	8.32	2.50	8.71	2.54	8.92	2.56	9.15	2.59	9.65	2.62	10.20	2.66
							35	7.82	2.52	8.16	2.56	8.56	2.61	8.85	2.62	9.02	2.65	9.53	2.69	10.10	2.72
							37	7.82	2.58	8.02	2.63	8.43	2.67	8.66	2.69	8.90	2.71	9.43	2.75	10.02	2.79
							39	7.82	2.65	7.88	2.69	8.31	2.73	8.55	2.75	8.80	2.77	9.34	2.81	9.94	2.85
							42	7.82	2.75	7.71	2.79	8.16	2.83	8.41	2.85	8.67	2.87	9.23	2.91	9.86	2.95
							44	7.82	2.82	7.60	2.86	8.07	2.90	8.33	2.92	8.60	2.94	9.18	2.98	9.82	3.02
							46	7.82	2.89	7.51	2.93	8.00	2.97	8.26	2.99	8.54	3.01	9.13	3.05	9.79	3.09

* All figures comply with EN14511

1. Cooling capacity is based on 27°CDB / 19°CWB (indoor temperature), 35°CDB (outdoor temperature).
2. Heating capacity is based on 20°CDB (indoor temperature), 7°CDB/6°CWB (outdoor temperature).
3. Capacities are based on the following conditions : - Corresponding refrigerant piping length : 5m / - Level difference : 0m
4. The total ability of connected a indoor unit is up to 17.3kW
5. It is impossible to connect the indoor unit for one room only.
6. This data is reference data for temperature capacity trend.

7 AJ100FCJ5EH

1) Cooling

COOLING

Combination (Capacity Index)					Combination (Total)	Combination (%)	Outdoor Temperature (°C, DB)	Indoor Temperature(°C, WB)													
								14		16		18		19		20		22		24	
								TC(kW)	PI(kW)	TC(kW)	PI(kW)	TC(kW)	PI(kW)	TC(kW)	PI(kW)	TC(kW)	PI(kW)	TC(kW)	PI(kW)	TC(kW)	PI(kW)
2000	2000	2500	5000		11500	115%	10	7.78	1.92	10.97	1.97	11.18	2.01	11.30	2.04	11.44	2.06	11.76	2.10	12.14	2.14
							12	7.78	1.97	10.67	2.01	10.89	2.06	11.03	2.08	11.17	2.11	11.51	2.15	11.90	2.19
							14	7.78	2.02	10.39	2.06	10.62	2.11	10.76	2.13	10.92	2.16	11.27	2.20	11.67	2.24
							16	7.78	2.07	10.11	2.11	10.36	2.16	10.51	2.18	10.67	2.21	11.04	2.25	11.46	2.29
							18	7.78	2.12	9.85	2.17	10.12	2.21	10.27	2.24	10.44	2.26	10.82	2.30	11.26	2.34
							20	7.78	2.17	9.60	2.22	9.88	2.27	10.05	2.29	10.22	2.31	10.62	2.35	11.07	2.39
							21	7.78	2.20	9.48	2.25	9.77	2.29	9.94	2.32	10.12	2.34	10.52	2.38	10.98	2.42
							23	7.78	2.26	9.25	2.30	9.56	2.35	9.73	2.37	9.92	2.39	10.34	2.44	10.81	2.48
							25	7.78	2.31	9.03	2.36	9.35	2.41	9.53	2.43	9.73	2.45	10.16	2.49	10.65	2.53
							27	7.78	2.37	8.82	2.42	9.16	2.47	9.35	2.49	9.55	2.51	10.00	2.55	10.51	2.59
							29	7.78	2.43	8.63	2.48	8.98	2.53	9.18	2.55	9.39	2.57	9.85	2.61	10.37	2.65
							31	7.78	2.50	8.45	2.54	8.81	2.59	9.02	2.61	9.24	2.63	9.72	2.67	10.25	2.71
							33	7.78	2.56	8.28	2.61	8.66	2.65	8.87	2.67	9.10	2.69	9.59	2.74	10.14	2.78
							35	7.78	2.62	8.12	2.67	8.52	2.71	8.80	2.73	8.97	2.76	9.48	2.80	10.05	2.84
							37	7.78	2.69	7.97	2.74	8.39	2.78	8.61	2.80	8.85	2.82	9.38	2.86	9.96	2.90
							39	7.78	2.76	7.84	2.80	8.27	2.85	8.50	2.87	8.75	2.89	9.29	2.93	9.89	2.97
							42	7.78	2.86	7.66	2.91	8.11	2.95	8.36	2.97	8.62	2.99	9.18	3.04	9.80	3.07
							44	7.78	2.93	7.56	2.98	8.03	3.02	8.28	3.04	8.55	3.07	9.13	3.11	9.76	3.14
							46	7.78	3.01	7.47	3.05	7.95	3.10	8.21	3.12	8.49	3.14	9.08	3.18	9.73	3.22
2000	2000	2500	6800		13300	133%	10	10.30	1.96	10.70	2.01	11.11	2.05	11.32	2.07	11.53	2.09	11.95	2.13	12.38	2.17
							12	10.12	2.02	10.53	2.06	10.94	2.10	11.15	2.12	11.35	2.14	11.78	2.19	12.21	2.23
							14	9.94	2.07	10.35	2.11	10.76	2.16	10.97	2.18	11.18	2.20	11.60	2.24	12.03	2.28
							16	9.76	2.13	10.17	2.17	10.58	2.21	10.79	2.23	11.00	2.25	11.43	2.30	11.86	2.34
							18	9.59	2.18	9.99	2.22	10.41	2.27	10.62	2.29	10.83	2.31	11.25	2.35	11.69	2.40
							20	9.41	2.24	9.82	2.28	10.23	2.32	10.44	2.35	10.65	2.37	11.08	2.41	11.51	2.45
							21	9.32	2.27	9.73	2.31	10.15	2.35	10.35	2.37	10.57	2.40	10.99	2.44	11.43	2.48
							23	9.15	2.32	9.55	2.37	9.97	2.41	10.18	2.43	10.39	2.46	10.82	2.50	11.25	2.54
							25	8.97	2.38	9.38	2.43	9.80	2.47	10.01	2.49	10.22	2.51	10.65	2.56	11.08	2.60
							27	8.79	2.44	9.20	2.49	9.62	2.53	9.83	2.55	10.05	2.58	10.47	2.62	10.91	2.66
							29	8.62	2.50	9.03	2.55	9.45	2.59	9.66	2.62	9.87	2.64	10.30	2.68	10.74	2.73
							31	8.44	2.57	8.86	2.61	9.28	2.66	9.49	2.68	9.70	2.70	10.13	2.75	10.57	2.79
							33	8.27	2.63	8.68	2.67	9.10	2.72	9.32	2.74	9.53	2.76	9.96	2.81	10.40	2.85
							35	8.10	2.69	8.51	2.74	8.93	2.78	9.16	2.80	9.36	2.83	9.79	2.87	10.23	2.92
							37	7.92	2.76	8.34	2.80	8.76	2.85	8.97	2.87	9.19	2.89	9.62	2.94	10.06	2.99
							39	7.75	2.82	8.17	2.87	8.59	2.92	8.80	2.94	9.02	2.96	9.45	3.01	9.89	3.05
							42	7.49	2.92	7.91	2.97	8.33	3.02	8.55	3.04	8.76	3.06	9.20	3.11	9.64	3.16
							44	7.32	2.99	7.74	3.04	8.16	3.09	8.38	3.11	8.59	3.13	9.03	3.18	9.47	3.23
							46	7.15	3.06	7.57	3.11	7.99	3.16	8.21	3.18	8.42	3.20	8.86	3.25	9.30	3.30
2000	2000	3500	3500		11000	110%	10	7.69	1.88	10.85	1.93	11.05	1.98	11.17	2.00	11.31	2.02	11.63	2.06	12.00	2.10
							12	7.69	1.93	10.55	1.98	10.77	2.02	10.90	2.05	11.05	2.07	11.38	2.11	11.76	2.15
							14	7.69	1.98	10.27	2.03	10.50	2.07	10.64	2.09	10.79	2.12	11.14	2.16	11.54	2.20
							16	7.69	2.03	10.00	2.08	10.25	2.12	10.39	2.14	10.55	2.17	10.91	2.21	11.33	2.25
							18	7.69	2.08	9.74	2.13	10.00	2.17	10.16	2.19	10.32	2.22	10.70	2.26	11.13	2.30
							20	7.69	2.13	9.49	2.18	9.77	2.23	9.93	2.25	10.11	2.27	10.50	2.31	10.95	2.35
							21	7.69	2.16	9.37	2.21	9.66	2.25	9.82	2.27	10.00	2.30	10.40	2.34	10.86	2.38
							23	7.69	2.22	9.14	2.26	9.45	2.31	9.62	2.33	9.80	2.35	10.22	2.39	10.69	2.43
							25	7.69	2.27	8.93	2.32	9.24	2.36	9.42	2.38	9.62	2.41	10.05	2.45	10.53	2.49
							27	7.69	2.33	8.72	2.38	9.06	2.42	9.24	2.44	9.44	2.46	9.89	2.50	10.39	2.54
							29	7.69	2.39	8.53	2.44	8.88	2.48	9.07	2.50	9.28	2.52	9.74	2.56	10.26	2.60
							31	7.69	2.45	8.35	2.50	8.71	2.54	8.92	2.56	9.13	2.58	9.61	2.62	10.14	2.66
							33	7.69	2.51	8.18	2.56	8.56	2.60	8.77	2.62	8.99	2.64	9.48	2.69	10.03	2.72
							35	7.69	2.58	8.03	2.62	8.42	2.67	8.70	2.68	8.87	2.71	9.37	2.75	9.93	2.79
							37	7.69	2.64	7.88	2.69	8.29	2.73	8.51	2.75	8.75	2.77	9.27	2.81	9.85	2.85
							39	7.69	2.71	7.75	2.75	8.17	2.80	8.41	2.82	8.65	2.84	9.19	2.88	9.78	2.92
							42	7.69	2.81	7.58	2.85	8.02	2.90	8.26	2.92	8.52	2.94	9.08	2.98	9.69	3.02
							44	7.69	2.88	7.47	2.92	7.93	2.97	8.19	2.99	8.45	3.01	9.02	3.05	9.65	3.09
							46	7.69	2.95	7.38	3.00	7.86	3.04	8.12	3.06	8.39	3.08	8.98	3.12	9.62	3.16
2000	2000	3500	5000		12500	125%	10	7.95	1.96	11.22	2.01	11.43	2.06	11.56	2.08	11.70	2.10	12.03	2.15	12.41	2.19
							12	7.95	2.01	10.91	2.06	11.14	2.11	11.28	2.13	11.43	2.15	11.77	2.20	12.17	2.24
							14	7.95	2.06	10.62	2.11	10.86	2.16	11.01	2.18	11.17	2.20	11.52	2.25	11.94	2.29
							16	7.95	2.11	10.34	2.16	10.60	2.21	10.75	2.23	10.92	2.25	11.29	2.30	11.72	2.34
							18	7.95	2.17	10.07	2.21	10.35	2.26	10.51	2.28	10.68	2.31	11.07	2.35	11.52	2.39
							20	7.95	2.22	9.82	2.27	10.11	2.32	10.27	2.34	10.46	2.36	10.86	2.41	11.32	2.45
							21	7.95	2.25	9.70	2.30	9.99	2.34	10.16	2.37	10.35	2.39	10.76	2.43	11.23	2.48
							23	7.95	2.31	9.46	2.35	9.77	2.40	9.95	2.42	10.14	2.45	10.57	2.49	11.06	2.53
							25	7.95	2.37	9.23	2.41	9.56	2.46	9.75	2.48	9.95	2.50	10.39	2.55	10.89	2.59
							27	7.95	2.43	9.02	2.47	9.37	2.52	9.56	2.54	9.77	2.56	10.23	2.61	10.75	2.65
							29	7.95	2.49	8.82	2.54	9.18	2.58	9.39	2.60	9.60	2.63	10.08	2.67	10.61	2.71
							31	7.95	2.55	8.64	2.60	9.01	2.64	9.22	2.67	9.45	2.69	9.94	2.73	10.48	2.77
							33	7.95	2.62	8.46	2.66	8.86	2.71	9.07	2.73	9.30	2.75	9.81	2.80	10.37	2.84
							35	7.95	2.68	8.30	2.73	8.71	2.77	9.00	2.79	9.17	2.82	9.69	2.86	10.27	2.90
							37	7.95	2.75	8.15	2.80	8.58	2.84	8.81	2.86	9.06	2.89	9.59	2.93	10.19	2.97
							39	7.95	2.82	8.02	2.87	8.46	2.91	8.70	2.93	8.95	2.95	9.50	3.00	10.11	3.04
							42	7.95	2.93	7.84	2.97	8.30	3.02	8.55	3.04	8.82	3.06	9.39	3.10	10.02	3.14
							44	7.95	3.00	7.73	3.04	8.21	3.09	8.47	3.11	8.74	3.13	9.33	3.17	9.98	3.21
							46	7.95	3.07	7.64	3.12	8.13	3.16	8.40	3.19	8.68	3.21	9.29	3.25	9.95	3.29

* All figures comply with EN14511

1. Cooling capacity is based on 27°CDB / 19°CWB (indoor temperature), 35°CDB (outdoor temperature).
2. Heating capacity is based on 20°CDB (indoor temperature), 7°CDB/6°CWB (outdoor temperature).
3. Capacities are based on the following conditions : - Corresponding refrigerant piping length : 5m / - Level difference : 0m
4. The total ability of connected a indoor unit is up to 17.3kW
5. It is impossible to connect the indoor unit for one room only.
6. This data is reference data for temperature capacity trend.

1) Cooling

COOLING

Combination (Capacity Index)					Combination (Total)	Combination (%)	Outdoor Temperature (°C, DB)	Indoor Temperature(°C, WB)													
								14		16		18		19		20		22		24	
								TC(kW)	PI(kW)	TC(kW)	PI(kW)	TC(kW)	PI(kW)	TC(kW)	PI(kW)	TC(kW)	PI(kW)	TC(kW)	PI(kW)	TC(kW)	PI(kW)
2000	2000	3500	6800		14300	143%	10	10.52	1.94	10.94	1.98	11.36	2.02	11.57	2.04	11.78	2.06	12.22	2.10	12.65	2.14
							12	10.34	1.99	10.76	2.03	11.18	2.07	11.39	2.09	11.60	2.11	12.04	2.15	12.47	2.20
							14	10.16	2.04	10.57	2.08	11.00	2.12	11.21	2.15	11.42	2.17	11.86	2.21	12.30	2.25
							16	9.98	2.09	10.39	2.14	10.82	2.18	11.03	2.20	11.24	2.22	11.68	2.26	12.12	2.31
							18	9.80	2.15	10.21	2.19	10.64	2.23	10.85	2.26	11.06	2.28	11.50	2.32	11.94	2.36
							20	9.62	2.21	10.03	2.25	10.46	2.29	10.67	2.31	10.89	2.33	11.32	2.38	11.76	2.42
							21	9.52	2.23	9.94	2.28	10.37	2.32	10.58	2.34	10.80	2.36	11.23	2.40	11.68	2.45
							23	9.34	2.29	9.76	2.33	10.19	2.38	10.40	2.40	10.62	2.42	11.06	2.46	11.50	2.51
							25	9.17	2.35	9.58	2.39	10.01	2.44	10.23	2.46	10.44	2.48	10.88	2.52	11.32	2.57
							27	8.99	2.41	9.41	2.45	9.83	2.50	10.05	2.52	10.26	2.54	10.70	2.58	11.15	2.63
							29	8.81	2.47	9.23	2.51	9.65	2.56	9.87	2.58	10.09	2.60	10.53	2.64	10.97	2.69
							31	8.63	2.53	9.05	2.57	9.48	2.62	9.69	2.64	9.91	2.66	10.35	2.71	10.80	2.75
							33	8.45	2.59	8.87	2.64	9.30	2.68	9.52	2.70	9.74	2.72	10.18	2.77	10.63	2.81
							35	8.27	2.65	8.70	2.70	9.13	2.74	9.36	2.76	9.56	2.79	10.00	2.83	10.45	2.88
							37	8.10	2.72	8.52	2.76	8.95	2.81	9.17	2.83	9.39	2.85	9.83	2.90	10.28	2.94
							39	7.92	2.78	8.34	2.83	8.78	2.87	8.99	2.90	9.21	2.92	9.66	2.96	10.11	3.01
							42	7.66	2.88	8.08	2.93	8.51	2.97	8.73	3.00	8.95	3.02	9.40	3.06	9.85	3.11
							44	7.48	2.95	7.91	3.00	8.34	3.04	8.56	3.06	8.78	3.09	9.23	3.13	9.68	3.18
							46	7.31	3.02	7.73	3.06	8.17	3.11	8.39	3.13	8.61	3.16	9.05	3.20	9.51	3.25
2000	2000	5000	5000		14000	140%	10	10.46	2.00	10.87	2.04	11.28	2.08	11.50	2.11	11.71	2.13	12.14	2.17	12.57	2.21
							12	10.28	2.05	10.69	2.10	11.10	2.14	11.32	2.16	11.53	2.18	11.96	2.22	12.39	2.27
							14	10.09	2.11	10.51	2.15	10.92	2.19	11.14	2.22	11.35	2.24	11.78	2.28	12.22	2.32
							16	9.91	2.16	10.33	2.21	10.75	2.25	10.96	2.27	11.17	2.29	11.60	2.34	12.04	2.38
							18	9.73	2.22	10.15	2.26	10.57	2.31	10.78	2.33	10.99	2.35	11.43	2.39	11.86	2.44
							20	9.55	2.28	9.97	2.32	10.39	2.37	10.60	2.39	10.82	2.41	11.25	2.45	11.69	2.50
							21	9.46	2.31	9.88	2.35	10.30	2.39	10.51	2.42	10.73	2.44	11.16	2.48	11.60	2.53
							23	9.28	2.37	9.70	2.41	10.12	2.45	10.34	2.48	10.55	2.50	10.99	2.54	11.43	2.59
							25	9.11	2.43	9.52	2.47	9.95	2.52	10.16	2.54	10.37	2.56	10.81	2.60	11.25	2.65
							27	8.93	2.49	9.35	2.53	9.77	2.58	9.98	2.60	10.20	2.62	10.63	2.67	11.08	2.71
							29	8.75	2.55	9.17	2.59	9.59	2.64	9.81	2.66	10.02	2.68	10.46	2.73	10.90	2.78
							31	8.57	2.61	8.99	2.66	9.42	2.70	9.63	2.73	9.85	2.75	10.29	2.79	10.73	2.84
							33	8.40	2.68	8.82	2.72	9.24	2.77	9.46	2.79	9.67	2.81	10.11	2.86	10.56	2.91
							35	8.22	2.74	8.64	2.79	9.07	2.83	9.30	2.85	9.50	2.88	9.94	2.93	10.38	2.97
							37	8.04	2.81	8.47	2.85	8.89	2.90	9.11	2.92	9.33	2.95	9.77	2.99	10.21	3.04
							39	7.87	2.87	8.29	2.92	8.72	2.97	8.94	2.99	9.15	3.01	9.59	3.06	10.04	3.11
							42	7.61	2.98	8.03	3.02	8.46	3.07	8.68	3.09	8.90	3.12	9.34	3.16	9.79	3.21
							44	7.43	3.05	7.86	3.09	8.29	3.14	8.50	3.16	8.72	3.19	9.17	3.24	9.61	3.28
							46	7.26	3.12	7.68	3.16	8.11	3.21	8.33	3.24	8.55	3.26	9.00	3.31	9.45	3.35
2000	2000	5000	6800		15800	158%	10	11.02	2.01	11.45	2.06	11.89	2.10	12.11	2.12	12.34	2.14	12.79	2.19	13.25	2.23
							12	10.83	2.07	11.26	2.11	11.70	2.15	11.92	2.18	12.15	2.20	12.60	2.24	13.06	2.28
							14	10.64	2.12	11.07	2.17	11.51	2.21	11.74	2.23	11.96	2.25	12.41	2.30	12.87	2.34
							16	10.45	2.18	10.88	2.22	11.32	2.27	11.55	2.29	11.77	2.31	12.23	2.35	12.69	2.40
							18	10.26	2.24	10.69	2.28	11.14	2.32	11.36	2.35	11.58	2.37	12.04	2.41	12.50	2.46
							20	10.07	2.29	10.50	2.34	10.95	2.38	11.17	2.40	11.40	2.43	11.85	2.47	12.32	2.52
							21	9.97	2.32	10.41	2.37	10.85	2.41	11.08	2.43	11.30	2.46	11.76	2.50	12.22	2.55
							23	9.78	2.38	10.22	2.43	10.67	2.47	10.89	2.49	11.12	2.52	11.58	2.56	12.04	2.61
							25	9.60	2.44	10.03	2.49	10.48	2.53	10.71	2.56	10.93	2.58	11.39	2.62	11.86	2.67
							27	9.41	2.50	9.85	2.55	10.29	2.59	10.52	2.62	10.75	2.64	11.21	2.69	11.67	2.73
							29	9.22	2.57	9.66	2.61	10.11	2.66	10.33	2.68	10.56	2.70	11.02	2.75	11.49	2.79
							31	9.03	2.63	9.48	2.68	9.92	2.72	10.15	2.74	10.38	2.77	10.84	2.81	11.31	2.86
							33	8.85	2.69	9.29	2.74	9.74	2.79	9.97	2.81	10.19	2.83	10.66	2.88	11.12	2.93
							35	8.66	2.76	9.11	2.81	9.55	2.85	9.80	2.87	10.01	2.90	10.47	2.95	10.94	2.99
							37	8.48	2.83	8.92	2.87	9.37	2.92	9.60	2.94	9.83	2.97	10.29	3.01	10.76	3.06
							39	8.29	2.89	8.74	2.94	9.19	2.99	9.42	3.01	9.65	3.04	10.11	3.08	10.58	3.13
							42	8.02	3.00	8.46	3.04	8.91	3.09	9.14	3.12	9.37	3.14	9.84	3.19	10.31	3.23
							44	7.83	3.07	8.28	3.11	8.73	3.16	8.96	3.19	9.19	3.21	9.66	3.26	10.13	3.31
							46	7.65	3.14	8.10	3.19	8.55	3.23	8.78	3.26	9.01	3.28	9.48	3.33	9.95	3.38
2000	2500	2500	2500		9500	95%	10	7.76	1.84	10.95	1.89	11.15	1.93	11.28	1.95	11.42	1.98	11.73	2.02	12.11	2.06
							12	7.76	1.89	10.65	1.93	10.87	1.98	11.00	2.00	11.15	2.02	11.48	2.06	11.87	2.10
							14	7.76	1.93	10.36	1.98	10.60	2.03	10.74	2.05	10.89	2.07	11.24	2.11	11.65	2.15
							16	7.76	1.98	10.09	2.03	10.34	2.07	10.49	2.10	10.65	2.12	11.01	2.16	11.44	2.20
							18	7.76	2.03	9.83	2.08	10.10	2.12	10.25	2.15	10.42	2.17	10.80	2.21	11.23	2.25
							20	7.76	2.09	9.58	2.13	9.86	2.18	10.02	2.20	10.20	2.22	10.60	2.26	11.05	2.30
							21	7.76	2.11	9.46	2.16	9.75	2.20	9.92	2.22	10.10	2.24	10.50	2.29	10.96	2.32
							23	7.76	2.17	9.23	2.21	9.53	2.26	9.71	2.28	9.90	2.30	10.31	2.34	10.79	2.38
							25	7.76	2.22	9.01	2.27	9.33	2.31	9.51	2.33	9.71	2.35	10.14	2.39	10.63	2.43
							27	7.76	2.28	8.80	2.32	9.14	2.37	9.33	2.39	9.53	2.41	9.98	2.45	10.48	2.49
							29	7.76	2.34	8.61	2.38	8.96	2.42	9.16	2.45	9.37	2.47	9.83	2.51	10.35	2.54
							31	7.76	2.40	8.43	2.44	8.79	2.48	9.00	2.50	9.22	2.52	9.69	2.56	10.23	2.60
							33	7.76	2.46	8.26	2.50	8.64	2.54	8.85	2.56	9.08	2.59	9.57	2.62	10.12	2.66
							35	7.76	2.52	8.10	2.56	8.50	2.61	8.78	2.62	8.95	2.65	9.46	2.69	10.02	2.72
							37	7.76	2.58	7.95	2.63	8.37	2.67	8.59	2.69	8.83	2.71	9.36	2.75	9.94	2.79
							39	7.76	2.65	7.82	2.69	8.25	2.73	8.48	2.75	8.73	2.77	9.27	2.81	9.87	2.85
							42	7.76	2.75	7.64	2.79	8.09	2.83	8.34	2.85	8.60	2.87	9.16	2.91	9.78	2.95
							44	7.76	2.82	7.54	2.86	8.01	2.90	8.26	2.92	8.53	2.94	9.10	2.98	9.74	3.02
							46	7.76	2.89	7.45	2.93	7.93	2.97	8.19	2.99	8.47	3.01	9.06	3.05	9.71	3.09

* All figures comply with EN14511

1. Cooling capacity is based on 27°CDB / 19°CWB (indoor temperature), 35°CDB (outdoor temperature).
2. Heating capacity is based on 20°CDB (indoor temperature), 7°CDB/6°CWB (outdoor temperature).
3. Capacities are based on the following conditions : - Corresponding refrigerant piping length : 5m / - Level difference : 0m
4. The total ability of connected a indoor unit is up to 17.3kW
5. It is impossible to connect the indoor unit for one room only.
6. This data is reference data for temperature capacity trend.

7 AJ100FCJ5EH

1) Cooling

COOLING

Combination (Capacity Index)					Combination (Total)	Combination (%)	Outdoor Temperature (°C, DB)	Indoor Temperature(°C, WB)													
								14		16		18		19		20		22		24	
								TC(kW)	PI(kW)	TC(kW)	PI(kW)	TC(kW)	PI(kW)	TC(kW)	PI(kW)	TC(kW)	PI(kW)	TC(kW)	PI(kW)	TC(kW)	PI(kW)
2000	2500	2500	3500		10500	105%	10	7.90	1.88	11.14	1.92	11.36	1.97	11.48	1.99	11.62	2.01	11.95	2.06	12.33	2.10
							12	7.90	1.92	10.84	1.97	11.07	2.02	11.20	2.04	11.35	2.06	11.69	2.10	12.09	2.14
							14	7.90	1.97	10.55	2.02	10.79	2.06	10.93	2.09	11.09	2.11	11.45	2.15	11.86	2.19
							16	7.90	2.02	10.27	2.07	10.53	2.11	10.68	2.14	10.84	2.16	11.22	2.20	11.64	2.24
							18	7.90	2.07	10.01	2.12	10.28	2.16	10.44	2.19	10.61	2.21	11.00	2.25	11.44	2.29
							20	7.90	2.13	9.75	2.17	10.04	2.22	10.21	2.24	10.39	2.26	10.79	2.30	11.25	2.34
							21	7.90	2.15	9.63	2.20	9.93	2.24	10.10	2.27	10.28	2.29	10.69	2.33	11.16	2.37
							23	7.90	2.21	9.40	2.25	9.71	2.30	9.88	2.32	10.08	2.34	10.50	2.38	10.98	2.42
							25	7.90	2.26	9.17	2.31	9.50	2.35	9.68	2.38	9.88	2.40	10.32	2.44	10.82	2.48
							27	7.90	2.32	8.96	2.37	9.31	2.41	9.50	2.43	9.70	2.45	10.16	2.50	10.67	2.54
							29	7.90	2.38	8.77	2.43	9.12	2.47	9.32	2.49	9.54	2.51	10.01	2.55	10.54	2.59
							31	7.90	2.44	8.58	2.49	8.95	2.53	9.16	2.55	9.38	2.57	9.87	2.61	10.41	2.65
							33	7.90	2.50	8.41	2.55	8.80	2.59	9.01	2.61	9.24	2.63	9.74	2.68	10.30	2.71
							35	7.90	2.57	8.25	2.61	8.65	2.66	8.94	2.67	9.11	2.70	9.63	2.74	10.20	2.78
							37	7.90	2.63	8.10	2.68	8.52	2.72	8.75	2.74	8.99	2.76	9.53	2.80	10.12	2.84
							39	7.90	2.70	7.96	2.74	8.40	2.79	8.64	2.81	8.89	2.83	9.44	2.87	10.05	2.91
							42	7.90	2.80	7.78	2.84	8.24	2.89	8.49	2.91	8.76	2.93	9.33	2.97	9.96	3.01
							44	7.90	2.87	7.68	2.91	8.15	2.96	8.41	2.98	8.68	3.00	9.27	3.04	9.91	3.08
							46	7.90	2.94	7.59	2.98	8.08	3.03	8.34	3.05	8.62	3.07	9.22	3.11	9.88	3.15
2000	2500	2500	5000		12000	120%	10	7.85	1.92	11.07	1.97	11.28	2.01	11.41	2.04	11.55	2.06	11.87	2.10	12.25	2.14
							12	7.85	1.97	10.77	2.01	10.99	2.06	11.13	2.08	11.28	2.11	11.61	2.15	12.01	2.19
							14	7.85	2.02	10.48	2.06	10.72	2.11	10.86	2.13	11.02	2.16	11.37	2.20	11.78	2.24
							16	7.85	2.07	10.20	2.11	10.46	2.16	10.61	2.18	10.77	2.21	11.14	2.25	11.57	2.29
							18	7.85	2.12	9.94	2.17	10.21	2.21	10.37	2.24	10.54	2.26	10.92	2.30	11.36	2.34
							20	7.85	2.17	9.69	2.22	9.97	2.27	10.14	2.29	10.32	2.31	10.72	2.35	11.17	2.39
							21	7.85	2.20	9.57	2.25	9.86	2.29	10.03	2.32	10.21	2.34	10.62	2.38	11.08	2.42
							23	7.85	2.26	9.33	2.30	9.64	2.35	9.82	2.37	10.01	2.39	10.43	2.44	10.91	2.48
							25	7.85	2.31	9.11	2.36	9.44	2.41	9.62	2.43	9.82	2.45	10.26	2.49	10.75	2.53
							27	7.85	2.37	8.90	2.42	9.24	2.47	9.43	2.49	9.64	2.51	10.09	2.55	10.60	2.59
							29	7.85	2.43	8.71	2.48	9.06	2.53	9.26	2.55	9.47	2.57	9.94	2.61	10.47	2.65
							31	7.85	2.50	8.52	2.54	8.89	2.59	9.10	2.61	9.32	2.63	9.80	2.67	10.34	2.71
							33	7.85	2.56	8.35	2.61	8.74	2.65	8.95	2.67	9.18	2.69	9.68	2.74	10.23	2.78
							35	7.85	2.62	8.19	2.67	8.59	2.71	8.88	2.73	9.05	2.76	9.57	2.80	10.14	2.84
							37	7.85	2.69	8.05	2.74	8.46	2.78	8.69	2.80	8.93	2.82	9.46	2.86	10.05	2.90
							39	7.85	2.76	7.91	2.80	8.34	2.85	8.58	2.87	8.83	2.89	9.38	2.93	9.98	2.97
							42	7.85	2.86	7.73	2.91	8.19	2.95	8.44	2.97	8.70	2.99	9.27	3.04	9.89	3.07
							44	7.85	2.93	7.63	2.98	8.10	3.02	8.35	3.04	8.62	3.07	9.21	3.11	9.85	3.14
							46	7.85	3.01	7.54	3.05	8.02	3.10	8.29	3.12	8.56	3.14	9.16	3.18	9.82	3.22
2000	2500	2500	6800		13800	138%	10	10.41	2.00	10.82	2.04	11.24	2.08	11.45	2.11	11.66	2.13	12.08	2.17	12.52	2.21
							12	10.23	2.05	10.64	2.10	11.06	2.14	11.27	2.16	11.48	2.18	11.91	2.22	12.34	2.27
							14	10.05	2.11	10.46	2.15	10.88	2.19	11.09	2.22	11.30	2.24	11.73	2.28	12.16	2.32
							16	9.87	2.16	10.28	2.21	10.70	2.25	10.91	2.27	11.12	2.29	11.55	2.34	11.99	2.38
							18	9.69	2.22	10.10	2.26	10.52	2.31	10.73	2.33	10.95	2.35	11.38	2.39	11.81	2.44
							20	9.51	2.28	9.93	2.32	10.34	2.37	10.56	2.39	10.77	2.41	11.20	2.45	11.64	2.50
							21	9.42	2.31	9.84	2.35	10.26	2.39	10.47	2.42	10.68	2.44	11.11	2.48	11.55	2.53
							23	9.24	2.37	9.66	2.41	10.08	2.45	10.29	2.48	10.51	2.50	10.94	2.54	11.38	2.59
							25	9.07	2.43	9.48	2.47	9.90	2.52	10.12	2.54	10.33	2.56	10.76	2.60	11.20	2.65
							27	8.89	2.49	9.31	2.53	9.73	2.58	9.94	2.60	10.16	2.62	10.59	2.67	11.03	2.71
							29	8.71	2.55	9.13	2.59	9.55	2.64	9.77	2.66	9.98	2.68	10.42	2.73	10.86	2.78
							31	8.54	2.61	8.95	2.66	9.38	2.70	9.59	2.73	9.81	2.75	10.24	2.79	10.68	2.84
							33	8.36	2.68	8.78	2.72	9.20	2.77	9.42	2.79	9.63	2.81	10.07	2.86	10.51	2.91
							35	8.18	2.74	8.60	2.79	9.03	2.83	9.26	2.85	9.46	2.88	9.90	2.93	10.34	2.97
							37	8.01	2.81	8.43	2.85	8.85	2.90	9.07	2.92	9.29	2.95	9.72	2.99	10.17	3.04
							39	7.84	2.87	8.26	2.92	8.68	2.97	8.90	2.99	9.11	3.01	9.55	3.06	10.00	3.11
							42	7.57	2.98	8.00	3.02	8.42	3.07	8.64	3.09	8.86	3.12	9.30	3.16	9.74	3.21
							44	7.40	3.05	7.82	3.09	8.25	3.14	8.47	3.16	8.69	3.19	9.13	3.24	9.57	3.28
							46	7.23	3.12	7.65	3.16	8.08	3.21	8.30	3.24	8.52	3.26	8.96	3.31	9.40	3.35
2000	2500	3500	3500		11500	115%	10	7.78	1.91	10.97	1.96	11.18	2.01	11.30	2.03	11.44	2.05	11.76	2.09	12.14	2.14
							12	7.78	1.96	10.67	2.01	10.89	2.05	11.03	2.08	11.17	2.10	11.51	2.14	11.90	2.18
							14	7.78	2.01	10.39	2.06	10.62	2.10	10.76	2.13	10.92	2.15	11.27	2.19	11.67	2.23
							16	7.78	2.06	10.11	2.11	10.36	2.15	10.51	2.18	10.67	2.20	11.04	2.24	11.46	2.28
							18	7.78	2.11	9.85	2.16	10.12	2.21	10.27	2.23	10.44	2.25	10.82	2.29	11.26	2.33
							20	7.78	2.17	9.60	2.21	9.88	2.26	10.05	2.28	10.22	2.30	10.62	2.35	11.07	2.39
							21	7.78	2.19	9.48	2.24	9.77	2.29	9.94	2.31	10.12	2.33	10.52	2.37	10.98	2.41
							23	7.78	2.25	9.25	2.30	9.56	2.34	9.73	2.36	9.92	2.39	10.34	2.43	10.81	2.47
							25	7.78	2.31	9.03	2.35	9.35	2.40	9.53	2.42	9.73	2.44	10.16	2.48	10.65	2.52
							27	7.78	2.36	8.82	2.41	9.16	2.46	9.35	2.48	9.55	2.50	10.00	2.54	10.51	2.58
							29	7.78	2.43	8.63	2.47	8.98	2.52	9.18	2.54	9.39	2.56	9.85	2.60	10.37	2.64
							31	7.78	2.49	8.45	2.53	8.81	2.58	9.02	2.60	9.24	2.62	9.72	2.66	10.25	2.70
							33	7.78	2.55	8.28	2.60	8.66	2.64	8.87	2.66	9.10	2.68	9.59	2.73	10.14	2.76
							35	7.78	2.61	8.12	2.66	8.52	2.71	8.80	2.72	8.97	2.75	9.48	2.79	10.05	2.83
							37	7.78	2.68	7.97	2.73	8.39	2.77	8.61	2.79	8.85	2.81	9.38	2.85	9.96	2.89
							39	7.78	2.75	7.84	2.79	8.27	2.84	8.50	2.86	8.75	2.88	9.29	2.92	9.89	2.96
							42	7.78	2.85	7.66	2.90	8.11	2.94	8.36	2.96	8.62	2.98	9.18	3.02	9.80	3.06
							44	7.78	2.92	7.56	2.97	8.03	3.01	8.28	3.03	8.55	3.05	9.13	3.09	9.76	3.13
							46	7.78	3.00	7.47	3.04	7.95	3.08	8.21	3.11	8.49	3.13	9.08	3.17	9.73	3.20

* All figures comply with EN14511

1. Cooling capacity is based on 27°CDB / 19°CWB (indoor temperature), 35°CDB (outdoor temperature).
2. Heating capacity is based on 20°CDB (indoor temperature), 7°CDB/6°CWB (outdoor temperature).
3. Capacities are based on the following conditions : - Corresponding refrigerant piping length : 5m / - Level difference : 0m
4. The total ability of connected a indoor unit is up to 17.3kW
5. It is impossible to connect the indoor unit for one room only.
6. This data is reference data for temperature capacity trend.

1) Cooling

COOLING

Combination (Capacity Index)					Combination (Total)	Combination (%)	Outdoor Temperature (°C, DB)	Indoor Temperature(°C, WB)													
								14		16		18		19		20		22		24	
								TC(kW)	PI(kW)	TC(kW)	PI(kW)	TC(kW)	PI(kW)	TC(kW)	PI(kW)	TC(kW)	PI(kW)	TC(kW)	PI(kW)	TC(kW)	PI(kW)
2000	2500	3500	5000		13000	130%	10	10.23	1.96	10.63	2.00	11.04	2.04	11.25	2.06	11.46	2.08	11.88	2.12	12.30	2.17
							12	10.05	2.01	10.46	2.05	10.87	2.09	11.07	2.12	11.28	2.14	11.70	2.18	12.13	2.22
							14	9.88	2.06	10.28	2.11	10.69	2.15	10.90	2.17	11.11	2.19	11.53	2.23	11.95	2.27
							16	9.70	2.12	10.10	2.16	10.51	2.20	10.72	2.22	10.93	2.25	11.35	2.29	11.78	2.33
							18	9.52	2.17	9.93	2.22	10.34	2.26	10.55	2.28	10.76	2.30	11.18	2.34	11.61	2.39
							20	9.35	2.23	9.75	2.27	10.17	2.32	10.37	2.34	10.58	2.36	11.01	2.40	11.44	2.45
							21	9.26	2.26	9.67	2.30	10.08	2.34	10.29	2.37	10.50	2.39	10.92	2.43	11.35	2.47
							23	9.09	2.32	9.49	2.36	9.91	2.40	10.11	2.42	10.32	2.45	10.75	2.49	11.18	2.53
							25	8.91	2.37	9.32	2.42	9.73	2.46	9.94	2.48	10.15	2.51	10.58	2.55	11.01	2.59
							27	8.74	2.43	9.14	2.48	9.56	2.52	9.77	2.54	9.98	2.57	10.41	2.61	10.84	2.65
							29	8.56	2.49	8.97	2.54	9.39	2.58	9.60	2.61	9.81	2.63	10.24	2.67	10.67	2.72
							31	8.39	2.56	8.80	2.60	9.21	2.65	9.43	2.67	9.64	2.69	10.07	2.74	10.50	2.78
							33	8.22	2.62	8.63	2.66	9.04	2.71	9.25	2.73	9.47	2.75	9.90	2.80	10.33	2.84
							35	8.04	2.68	8.45	2.73	8.87	2.77	9.10	2.79	9.30	2.82	9.73	2.86	10.16	2.91
							37	7.87	2.75	8.28	2.79	8.70	2.84	8.91	2.86	9.13	2.88	9.56	2.93	9.99	2.98
							39	7.70	2.81	8.11	2.86	8.53	2.90	8.74	2.93	8.96	2.95	9.39	3.00	9.83	3.04
							42	7.44	2.91	7.86	2.96	8.28	3.01	8.49	3.03	8.70	3.05	9.14	3.10	9.57	3.14
							44	7.27	2.98	7.69	3.03	8.11	3.07	8.32	3.10	8.54	3.12	8.97	3.17	9.41	3.21
							46	7.10	3.05	7.52	3.10	7.94	3.14	8.15	3.17	8.37	3.19	8.80	3.24	9.24	3.28
2000	2500	3500	6800		14800	148%	10	10.65	1.97	11.07	2.01	11.49	2.06	11.71	2.08	11.92	2.10	12.36	2.14	12.80	2.18
							12	10.46	2.02	10.88	2.07	11.31	2.11	11.52	2.13	11.74	2.15	12.18	2.19	12.62	2.24
							14	10.28	2.08	10.70	2.12	11.12	2.16	11.34	2.18	11.56	2.21	12.00	2.25	12.44	2.29
							16	10.09	2.13	10.52	2.18	10.94	2.22	11.16	2.24	11.38	2.26	11.82	2.30	12.26	2.35
							18	9.91	2.19	10.33	2.23	10.76	2.27	10.98	2.30	11.19	2.32	11.63	2.36	12.08	2.40
							20	9.73	2.25	10.15	2.29	10.58	2.33	10.80	2.35	11.01	2.38	11.46	2.42	11.90	2.46
							21	9.64	2.27	10.06	2.32	10.49	2.36	10.71	2.38	10.92	2.40	11.37	2.45	11.81	2.49
							23	9.45	2.33	9.88	2.38	10.31	2.42	10.53	2.44	10.74	2.46	11.19	2.51	11.63	2.55
							25	9.27	2.39	9.70	2.44	10.13	2.48	10.35	2.50	10.56	2.52	11.01	2.57	11.46	2.61
							27	9.09	2.45	9.52	2.50	9.95	2.54	10.17	2.56	10.39	2.58	10.83	2.63	11.28	2.67
							29	8.91	2.51	9.34	2.56	9.77	2.60	9.99	2.62	10.21	2.65	10.65	2.69	11.10	2.74
							31	8.73	2.57	9.16	2.62	9.59	2.66	9.81	2.69	10.03	2.71	10.47	2.75	10.93	2.80
							33	8.55	2.64	8.98	2.68	9.41	2.73	9.63	2.75	9.85	2.77	10.30	2.82	10.75	2.86
							35	8.37	2.70	8.80	2.75	9.23	2.79	9.47	2.81	9.67	2.84	10.12	2.88	10.57	2.93
							37	8.19	2.77	8.62	2.81	9.06	2.86	9.28	2.88	9.50	2.90	9.95	2.95	10.40	3.00
							39	8.01	2.83	8.44	2.88	8.88	2.93	9.10	2.95	9.32	2.97	9.77	3.02	10.23	3.06
							42	7.75	2.93	8.18	2.98	8.61	3.03	8.84	3.05	9.06	3.07	9.51	3.12	9.96	3.17
							44	7.57	3.00	8.00	3.05	8.44	3.10	8.66	3.12	8.88	3.14	9.33	3.19	9.79	3.24
							46	7.39	3.07	7.82	3.12	8.26	3.17	8.48	3.19	8.71	3.21	9.16	3.26	9.62	3.31
2000	2500	5000	5000		14500	145%	10	10.57	1.96	10.98	2.01	11.41	2.05	11.62	2.07	11.83	2.09	12.27	2.13	12.71	2.17
							12	10.39	2.02	10.80	2.06	11.22	2.10	11.44	2.12	11.65	2.14	12.09	2.19	12.53	2.23
							14	10.20	2.07	10.62	2.11	11.04	2.16	11.26	2.18	11.47	2.20	11.91	2.24	12.35	2.28
							16	10.02	2.13	10.44	2.17	10.86	2.21	11.08	2.23	11.29	2.25	11.73	2.30	12.17	2.34
							18	9.84	2.18	10.26	2.22	10.68	2.27	10.90	2.29	11.11	2.31	11.55	2.35	11.99	2.40
							20	9.66	2.24	10.08	2.28	10.50	2.32	10.72	2.35	10.93	2.37	11.37	2.41	11.81	2.45
							21	9.57	2.27	9.99	2.31	10.41	2.35	10.63	2.37	10.84	2.40	11.28	2.44	11.73	2.48
							23	9.38	2.32	9.81	2.37	10.23	2.41	10.45	2.43	10.66	2.46	11.10	2.50	11.55	2.54
							25	9.20	2.38	9.63	2.43	10.05	2.47	10.27	2.49	10.49	2.51	10.93	2.56	11.37	2.60
							27	9.02	2.44	9.45	2.49	9.87	2.53	10.09	2.55	10.31	2.58	10.75	2.62	11.20	2.66
							29	8.84	2.50	9.27	2.55	9.70	2.59	9.91	2.62	10.13	2.64	10.57	2.68	11.02	2.73
							31	8.67	2.57	9.09	2.61	9.52	2.66	9.74	2.68	9.95	2.70	10.40	2.75	10.85	2.79
							33	8.49	2.63	8.91	2.67	9.34	2.72	9.56	2.74	9.78	2.76	10.22	2.81	10.67	2.85
							35	8.31	2.69	8.73	2.74	9.16	2.78	9.40	2.80	9.60	2.83	10.05	2.87	10.50	2.92
							37	8.13	2.76	8.56	2.80	8.99	2.85	9.21	2.87	9.43	2.89	9.87	2.94	10.32	2.99
							39	7.95	2.82	8.38	2.87	8.81	2.92	9.03	2.94	9.25	2.96	9.70	3.01	10.15	3.05
							42	7.69	2.92	8.12	2.97	8.55	3.02	8.77	3.04	8.99	3.06	9.44	3.11	9.89	3.16
							44	7.51	2.99	7.94	3.04	8.38	3.09	8.60	3.11	8.82	3.13	9.26	3.18	9.72	3.23
							46	7.34	3.06	7.77	3.11	8.20	3.16	8.42	3.18	8.64	3.20	9.09	3.25	9.55	3.30
2000	2500	5000	6800		16300	163%	10	11.02	2.01	11.45	2.06	11.89	2.10	12.11	2.12	12.34	2.14	12.79	2.19	13.25	2.23
							12	10.83	2.07	11.26	2.11	11.70	2.15	11.92	2.18	12.15	2.20	12.60	2.24	13.06	2.28
							14	10.64	2.12	11.07	2.17	11.51	2.21	11.74	2.23	11.96	2.25	12.41	2.30	12.87	2.34
							16	10.45	2.18	10.88	2.22	11.32	2.27	11.55	2.29	11.77	2.31	12.23	2.35	12.69	2.40
							18	10.26	2.24	10.69	2.28	11.14	2.32	11.36	2.35	11.58	2.37	12.04	2.41	12.50	2.46
							20	10.07	2.29	10.50	2.34	10.95	2.38	11.17	2.40	11.40	2.43	11.85	2.47	12.32	2.52
							21	9.97	2.32	10.41	2.37	10.85	2.41	11.08	2.43	11.30	2.46	11.76	2.50	12.22	2.55
							23	9.78	2.38	10.22	2.43	10.67	2.47	10.89	2.49	11.12	2.52	11.58	2.56	12.04	2.61
							25	9.60	2.44	10.03	2.49	10.48	2.53	10.71	2.56	10.93	2.58	11.39	2.62	11.86	2.67
							27	9.41	2.50	9.85	2.55	10.29	2.59	10.52	2.62	10.75	2.64	11.21	2.69	11.67	2.73
							29	9.22	2.57	9.66	2.61	10.11	2.66	10.33	2.68	10.56	2.70	11.02	2.75	11.49	2.79
							31	9.03	2.63	9.48	2.68	9.92	2.72	10.15	2.74	10.38	2.77	10.84	2.81	11.31	2.86
							33	8.85	2.69	9.29	2.74	9.74	2.79	9.97	2.81	10.19	2.83	10.66	2.88	11.12	2.93
							35	8.66	2.76	9.11	2.81	9.55	2.85	9.80	2.87	10.01	2.90	10.47	2.95	10.94	2.99
							37	8.48	2.83	8.92	2.87	9.37	2.92	9.60	2.94	9.83	2.97	10.29	3.01	10.76	3.06
							39	8.29	2.89	8.74	2.94	9.19	2.99	9.42	3.01	9.65	3.04	10.11	3.08	10.58	3.13
							42	8.02	3.00	8.46	3.04	8.91	3.09	9.14	3.12	9.37	3.14	9.84	3.19	10.31	3.23
							44	7.83	3.07	8.28	3.11	8.73	3.16	8.96	3.19	9.19	3.21	9.66	3.26	10.13	3.31
							46	7.65	3.14	8.10	3.19	8.55	3.23	8.78	3.26	9.01	3.28	9.48	3.33	9.95	3.38

* All figures comply with EN14511

1. Cooling capacity is based on 27°CDB / 19°CWB (indoor temperature), 35°CDB (outdoor temperature).
2. Heating capacity is based on 20°CDB (indoor temperature), 7°CDB/6°CWB (outdoor temperature).
3. Capacities are based on the following conditions : - Corresponding refrigerant piping length : 5m / - Level difference : 0m
4. The total ability of connected a indoor unit is up to 17.3kW
5. It is impossible to connect the indoor unit for one room only.
6. This data is reference data for temperature capacity trend.

7 AJ100FCJ5EH

1) Cooling

COOLING

Combination (Capacity Index)					Combination (Total)	Combination (%)	Outdoor Temperature (°C, DB)	Indoor Temperature(°C, WB)													
								14		16		18		19		20		22		24	
								TC(kW)	PI(kW)	TC(kW)	PI(kW)	TC(kW)	PI(kW)	TC(kW)	PI(kW)	TC(kW)	PI(kW)	TC(kW)	PI(kW)	TC(kW)	PI(kW)
2000	3500	3500	3500		12500	125%	10	7.95	1.95	11.22	2.00	11.43	2.05	11.56	2.07	11.70	2.10	12.03	2.14	12.41	2.18
							12	7.95	2.00	10.91	2.05	11.14	2.10	11.28	2.12	11.43	2.14	11.77	2.19	12.17	2.23
							14	7.95	2.05	10.62	2.10	10.86	2.15	11.01	2.17	11.17	2.19	11.52	2.24	11.94	2.28
							16	7.95	2.10	10.34	2.15	10.60	2.20	10.75	2.22	10.92	2.25	11.29	2.29	11.72	2.33
							18	7.95	2.16	10.07	2.21	10.35	2.25	10.51	2.28	10.68	2.30	11.07	2.34	11.52	2.38
							20	7.95	2.21	9.82	2.26	10.11	2.31	10.27	2.33	10.46	2.35	10.86	2.40	11.32	2.44
							21	7.95	2.24	9.70	2.29	9.99	2.34	10.16	2.36	10.35	2.38	10.76	2.42	11.23	2.47
							23	7.95	2.30	9.46	2.35	9.77	2.39	9.95	2.42	10.14	2.44	10.57	2.48	11.06	2.52
							25	7.95	2.36	9.23	2.40	9.56	2.45	9.75	2.47	9.95	2.50	10.39	2.54	10.89	2.58
							27	7.95	2.42	9.02	2.46	9.37	2.51	9.56	2.53	9.77	2.56	10.23	2.60	10.75	2.64
							29	7.95	2.48	8.82	2.53	9.18	2.57	9.39	2.59	9.60	2.62	10.08	2.66	10.61	2.70
							31	7.95	2.54	8.64	2.59	9.01	2.63	9.22	2.66	9.45	2.68	9.94	2.72	10.48	2.76
							33	7.95	2.61	8.46	2.65	8.86	2.70	9.07	2.72	9.30	2.74	9.81	2.79	10.37	2.83
							35	7.95	2.67	8.30	2.72	8.71	2.76	9.00	2.78	9.17	2.81	9.69	2.85	10.27	2.89
							37	7.95	2.74	8.15	2.79	8.58	2.83	8.81	2.85	9.06	2.88	9.59	2.92	10.19	2.96
							39	7.95	2.81	8.02	2.86	8.46	2.90	8.70	2.92	8.95	2.94	9.50	2.99	10.11	3.03
							42	7.95	2.91	7.84	2.96	8.30	3.01	8.55	3.03	8.82	3.05	9.39	3.09	10.02	3.13
							44	7.95	2.99	7.73	3.03	8.21	3.08	8.47	3.10	8.74	3.12	9.33	3.16	9.98	3.20
							46	7.95	3.06	7.64	3.11	8.13	3.15	8.40	3.17	8.68	3.19	9.29	3.24	9.95	3.28
2000	3500	3500	5000		14000	140%	10	10.48	1.99	10.89	2.04	11.31	2.08	11.52	2.10	11.73	2.12	12.16	2.16	12.60	2.21
							12	10.30	2.05	10.71	2.09	11.13	2.13	11.34	2.15	11.55	2.17	11.98	2.22	12.42	2.26
							14	10.12	2.10	10.53	2.14	10.95	2.19	11.16	2.21	11.37	2.23	11.81	2.27	12.24	2.32
							16	9.93	2.16	10.35	2.20	10.77	2.24	10.98	2.26	11.20	2.29	11.63	2.33	12.07	2.37
							18	9.75	2.21	10.17	2.26	10.59	2.30	10.80	2.32	11.02	2.34	11.45	2.39	11.89	2.43
							20	9.57	2.27	9.99	2.31	10.41	2.36	10.62	2.38	10.84	2.40	11.27	2.45	11.71	2.49
							21	9.48	2.30	9.90	2.34	10.32	2.39	10.54	2.41	10.75	2.43	11.19	2.47	11.63	2.52
							23	9.30	2.36	9.72	2.40	10.14	2.45	10.36	2.47	10.57	2.49	11.01	2.53	11.45	2.58
							25	9.13	2.42	9.54	2.46	9.97	2.51	10.18	2.53	10.40	2.55	10.83	2.60	11.28	2.64
							27	8.95	2.48	9.37	2.52	9.79	2.57	10.00	2.59	10.22	2.61	10.66	2.66	11.10	2.70
							29	8.77	2.54	9.19	2.58	9.61	2.63	9.83	2.65	10.05	2.68	10.48	2.72	10.93	2.77
							31	8.59	2.60	9.01	2.65	9.44	2.69	9.65	2.72	9.87	2.74	10.31	2.78	10.75	2.83
							33	8.41	2.67	8.84	2.71	9.26	2.76	9.48	2.78	9.70	2.80	10.13	2.85	10.58	2.89
							35	8.24	2.73	8.66	2.78	9.09	2.82	9.32	2.84	9.52	2.87	9.96	2.92	10.41	2.96
							37	8.06	2.80	8.48	2.84	8.91	2.89	9.13	2.91	9.35	2.94	9.79	2.98	10.24	3.03
							39	7.89	2.86	8.31	2.91	8.74	2.96	8.96	2.98	9.17	3.00	9.62	3.05	10.06	3.10
							42	7.62	2.97	8.05	3.01	8.48	3.06	8.70	3.08	8.91	3.11	9.36	3.15	9.81	3.20
							44	7.45	3.03	7.87	3.08	8.30	3.13	8.52	3.15	8.74	3.18	9.19	3.22	9.64	3.27
							46	7.27	3.11	7.70	3.15	8.13	3.20	8.35	3.22	8.57	3.25	9.01	3.30	9.47	3.34
2000	3500	3500	6800		15800	158%	10	11.02	2.01	11.45	2.05	11.89	2.09	12.11	2.11	12.34	2.14	12.79	2.18	13.25	2.22
							12	10.83	2.06	11.26	2.10	11.70	2.15	11.92	2.17	12.15	2.19	12.60	2.23	13.06	2.28
							14	10.64	2.12	11.07	2.16	11.51	2.20	11.74	2.22	11.96	2.25	12.41	2.29	12.87	2.33
							16	10.45	2.17	10.88	2.21	11.32	2.26	11.55	2.28	11.77	2.30	12.23	2.35	12.69	2.39
							18	10.26	2.23	10.69	2.27	11.14	2.32	11.36	2.34	11.58	2.36	12.04	2.40	12.50	2.45
							20	10.07	2.29	10.50	2.33	10.95	2.37	11.17	2.40	11.40	2.42	11.85	2.46	12.32	2.51
							21	9.97	2.31	10.41	2.36	10.85	2.40	11.08	2.43	11.30	2.45	11.76	2.49	12.22	2.54
							23	9.78	2.37	10.22	2.42	10.67	2.46	10.89	2.49	11.12	2.51	11.58	2.55	12.04	2.60
							25	9.60	2.43	10.03	2.48	10.48	2.52	10.71	2.55	10.93	2.57	11.39	2.61	11.86	2.66
							27	9.41	2.50	9.85	2.54	10.29	2.59	10.52	2.61	10.75	2.63	11.21	2.68	11.67	2.72
							29	9.22	2.56	9.66	2.60	10.11	2.65	10.33	2.67	10.56	2.69	11.02	2.74	11.49	2.79
							31	9.03	2.62	9.48	2.67	9.92	2.71	10.15	2.74	10.38	2.76	10.84	2.80	11.31	2.85
							33	8.85	2.69	9.29	2.73	9.74	2.78	9.97	2.80	10.19	2.82	10.66	2.87	11.12	2.92
							35	8.66	2.75	9.11	2.80	9.55	2.84	9.80	2.86	10.01	2.89	10.47	2.94	10.94	2.98
							37	8.48	2.82	8.92	2.86	9.37	2.91	9.60	2.93	9.83	2.96	10.29	3.00	10.76	3.05
							39	8.29	2.88	8.74	2.93	9.19	2.98	9.42	3.00	9.65	3.02	10.11	3.07	10.58	3.12
							42	8.02	2.99	8.46	3.03	8.91	3.08	9.14	3.10	9.37	3.13	9.84	3.18	10.31	3.22
							44	7.83	3.06	8.28	3.10	8.73	3.15	8.96	3.18	9.19	3.20	9.66	3.25	10.13	3.29
							46	7.65	3.13	8.10	3.17	8.55	3.22	8.78	3.25	9.01	3.27	9.48	3.32	9.95	3.37
2000	3500	5000	5000		15500	155%	10	11.02	2.00	11.45	2.04	11.89	2.08	12.11	2.11	12.34	2.13	12.79	2.17	13.25	2.21
							12	10.83	2.05	11.26	2.10	11.70	2.14	11.92	2.16	12.15	2.18	12.60	2.22	13.06	2.27
							14	10.64	2.11	11.07	2.15	11.51	2.19	11.74	2.22	11.96	2.24	12.41	2.28	12.87	2.32
							16	10.45	2.16	10.88	2.21	11.32	2.25	11.55	2.27	11.77	2.29	12.23	2.34	12.69	2.38
							18	10.26	2.22	10.69	2.26	11.14	2.31	11.36	2.33	11.58	2.35	12.04	2.39	12.50	2.44
							20	10.07	2.28	10.50	2.32	10.95	2.37	11.17	2.39	11.40	2.41	11.85	2.45	12.32	2.50
							21	9.97	2.31	10.41	2.35	10.85	2.39	11.08	2.42	11.30	2.44	11.76	2.48	12.22	2.53
							23	9.78	2.37	10.22	2.41	10.67	2.45	10.89	2.48	11.12	2.50	11.58	2.54	12.04	2.59
							25	9.60	2.43	10.03	2.47	10.48	2.52	10.71	2.54	10.93	2.56	11.39	2.60	11.86	2.65
							27	9.41	2.49	9.85	2.53	10.29	2.58	10.52	2.60	10.75	2.62	11.21	2.67	11.67	2.71
							29	9.22	2.55	9.66	2.59	10.11	2.64	10.33	2.66	10.56	2.68	11.02	2.73	11.49	2.78
							31	9.03	2.61	9.48	2.66	9.92	2.70	10.15	2.73	10.38	2.75	10.84	2.79	11.31	2.84
							33	8.85	2.68	9.29	2.72	9.74	2.77	9.97	2.79	10.19	2.81	10.66	2.86	11.12	2.91
							35	8.66	2.74	9.11	2.79	9.55	2.83	9.80	2.85	10.01	2.88	10.47	2.93	10.94	2.97
							37	8.48	2.81	8.92	2.85	9.37	2.90	9.60	2.92	9.83	2.95	10.29	2.99	10.76	3.04
							39	8.29	2.87	8.74	2.92	9.19	2.97	9.42	2.99	9.65	3.01	10.11	3.06	10.58	3.11
							42	8.02	2.98	8.46	3.02	8.91	3.07	9.14	3.09	9.37	3.12	9.84	3.16	10.31	3.21
							44	7.83	3.05	8.28	3.09	8.73	3.14	8.96	3.16	9.19	3.19	9.66	3.24	10.13	3.28
							46	7.65	3.12	8.10	3.16	8.55	3.21	8.78	3.24	9.01	3.26	9.48	3.31	9.95	3.35

* All figures comply with EN14511

1. Cooling capacity is based on 27°CDB / 19°CWB (indoor temperature), 35°CDB (outdoor temperature).
2. Heating capacity is based on 20°CDB (indoor temperature), 7°CDB/6°CWB (outdoor temperature).
3. Capacities are based on the following conditions : - Corresponding refrigerant piping length : 5m / - Level difference : 0m
4. The total ability of connected a indoor unit is up to 17.3kW
5. It is impossible to connect the indoor unit for one room only.
6. This data is reference data for temperature capacity trend.

1) Cooling

COOLING

Combination (Capacity Index)					Combination (Total)	Combination (%)	Outdoor Temperature (°C, DB)	Indoor Temperature(°C, WB)													
								14		16		18		19		20		22		24	
								TC(kW)	PI(kW)	TC(kW)	PI(kW)	TC(kW)	PI(kW)	TC(kW)	PI(kW)	TC(kW)	PI(kW)	TC(kW)	PI(kW)	TC(kW)	PI(kW)
2000	3500	5000	6800		17300	173%	10	11.02	2.05	11.45	2.09	11.89	2.14	12.11	2.16	12.34	2.18	12.79	2.22	13.25	2.27
							12	10.83	2.10	11.26	2.15	11.70	2.19	11.92	2.21	12.15	2.24	12.60	2.28	13.06	2.32
							14	10.64	2.16	11.07	2.20	11.51	2.25	11.74	2.27	11.96	2.29	12.41	2.34	12.87	2.38
							16	10.45	2.22	10.88	2.26	11.32	2.31	11.55	2.33	11.77	2.35	12.23	2.39	12.69	2.44
							18	10.26	2.27	10.69	2.32	11.14	2.36	11.36	2.39	11.58	2.41	12.04	2.45	12.50	2.50
							20	10.07	2.33	10.50	2.38	10.95	2.42	11.17	2.45	11.40	2.47	11.85	2.51	12.32	2.56
							21	9.97	2.36	10.41	2.41	10.85	2.45	11.08	2.48	11.30	2.50	11.76	2.54	12.22	2.59
							23	9.78	2.42	10.22	2.47	10.67	2.51	10.89	2.54	11.12	2.56	11.58	2.61	12.04	2.65
							25	9.60	2.49	10.03	2.53	10.48	2.58	10.71	2.60	10.93	2.62	11.39	2.67	11.86	2.71
							27	9.41	2.55	9.85	2.59	10.29	2.64	10.52	2.66	10.75	2.69	11.21	2.73	11.67	2.78
							29	9.22	2.61	9.66	2.66	10.11	2.70	10.33	2.73	10.56	2.75	11.02	2.80	11.49	2.84
							31	9.03	2.68	9.48	2.72	9.92	2.77	10.15	2.79	10.38	2.82	10.84	2.86	11.31	2.91
							33	8.85	2.74	9.29	2.79	9.74	2.84	9.97	2.86	10.19	2.88	10.66	2.93	11.12	2.98
							35	8.66	2.81	9.11	2.86	9.55	2.90	9.80	2.92	10.01	2.95	10.47	3.00	10.94	3.04
							37	8.48	2.88	8.92	2.92	9.37	2.97	9.60	2.99	9.83	3.02	10.29	3.07	10.76	3.11
							39	8.29	2.94	8.74	2.99	9.19	3.04	9.42	3.06	9.65	3.09	10.11	3.14	10.58	3.18
							42	8.02	3.05	8.46	3.10	8.91	3.15	9.14	3.17	9.37	3.19	9.84	3.24	10.31	3.29
							44	7.83	3.12	8.28	3.17	8.73	3.22	8.96	3.24	9.19	3.27	9.66	3.31	10.13	3.36
							46	7.65	3.19	8.10	3.24	8.55	3.29	8.78	3.31	9.01	3.34	9.48	3.39	9.95	3.44
2000	5000	5000	5000		17000	170%	10	11.02	2.05	11.45	2.09	11.89	2.14	12.11	2.16	12.34	2.18	12.79	2.22	13.25	2.27
							12	10.83	2.10	11.26	2.15	11.70	2.19	11.92	2.21	12.15	2.24	12.60	2.28	13.06	2.32
							14	10.64	2.16	11.07	2.20	11.51	2.25	11.74	2.27	11.96	2.29	12.41	2.34	12.87	2.38
							16	10.45	2.22	10.88	2.26	11.32	2.31	11.55	2.33	11.77	2.35	12.23	2.39	12.69	2.44
							18	10.26	2.27	10.69	2.32	11.14	2.36	11.36	2.39	11.58	2.41	12.04	2.45	12.50	2.50
							20	10.07	2.33	10.50	2.38	10.95	2.42	11.17	2.45	11.40	2.47	11.85	2.51	12.32	2.56
							21	9.97	2.36	10.41	2.41	10.85	2.45	11.08	2.48	11.30	2.50	11.76	2.54	12.22	2.59
							23	9.78	2.42	10.22	2.47	10.67	2.51	10.89	2.54	11.12	2.56	11.58	2.61	12.04	2.65
							25	9.60	2.49	10.03	2.53	10.48	2.58	10.71	2.60	10.93	2.62	11.39	2.67	11.86	2.71
							27	9.41	2.55	9.85	2.59	10.29	2.64	10.52	2.66	10.75	2.69	11.21	2.73	11.67	2.78
							29	9.22	2.61	9.66	2.66	10.11	2.70	10.33	2.73	10.56	2.75	11.02	2.80	11.49	2.84
							31	9.03	2.68	9.48	2.72	9.92	2.77	10.15	2.79	10.38	2.82	10.84	2.86	11.31	2.91
							33	8.85	2.74	9.29	2.79	9.74	2.84	9.97	2.86	10.19	2.88	10.66	2.93	11.12	2.98
							35	8.66	2.81	9.11	2.86	9.55	2.90	9.80	2.92	10.01	2.95	10.47	3.00	10.94	3.04
							37	8.48	2.88	8.92	2.92	9.37	2.97	9.60	2.99	9.83	3.02	10.29	3.07	10.76	3.11
							39	8.29	2.94	8.74	2.99	9.19	3.04	9.42	3.06	9.65	3.09	10.11	3.14	10.58	3.18
							42	8.02	3.05	8.46	3.10	8.91	3.15	9.14	3.17	9.37	3.19	9.84	3.24	10.31	3.29
							44	7.83	3.12	8.28	3.17	8.73	3.22	8.96	3.24	9.19	3.27	9.66	3.31	10.13	3.36
							46	7.65	3.19	8.10	3.24	8.55	3.29	8.78	3.31	9.01	3.34	9.48	3.39	9.95	3.44
2500	2500	2500	2500		10000	100%	10	7.81	1.84	11.02	1.89	11.23	1.93	11.35	1.95	11.49	1.98	11.82	2.02	12.19	2.06
							12	7.81	1.89	10.72	1.93	10.94	1.98	11.08	2.00	11.22	2.02	11.56	2.06	11.95	2.10
							14	7.81	1.93	10.43	1.98	10.67	2.03	10.81	2.05	10.97	2.07	11.32	2.11	11.73	2.15
							16	7.81	1.98	10.16	2.03	10.41	2.07	10.56	2.10	10.72	2.12	11.09	2.16	11.51	2.20
							18	7.81	2.03	9.89	2.08	10.16	2.12	10.32	2.15	10.49	2.17	10.87	2.21	11.31	2.25
							20	7.81	2.09	9.64	2.13	9.93	2.18	10.09	2.20	10.27	2.22	10.67	2.26	11.12	2.30
							21	7.81	2.11	9.52	2.16	9.82	2.20	9.98	2.22	10.16	2.24	10.57	2.29	11.03	2.32
							23	7.81	2.17	9.29	2.21	9.60	2.26	9.77	2.28	9.96	2.30	10.38	2.34	10.86	2.38
							25	7.81	2.22	9.07	2.27	9.39	2.31	9.58	2.33	9.77	2.35	10.21	2.39	10.70	2.43
							27	7.81	2.28	8.86	2.32	9.20	2.37	9.39	2.39	9.60	2.41	10.05	2.45	10.55	2.49
							29	7.81	2.34	8.67	2.38	9.02	2.42	9.22	2.45	9.43	2.47	9.90	2.51	10.42	2.54
							31	7.81	2.40	8.48	2.44	8.85	2.48	9.06	2.50	9.28	2.52	9.76	2.56	10.30	2.60
							33	7.81	2.46	8.31	2.50	8.70	2.54	8.91	2.56	9.14	2.59	9.64	2.62	10.19	2.66
							35	7.81	2.52	8.16	2.56	8.55	2.61	8.84	2.62	9.01	2.65	9.52	2.69	10.09	2.72
							37	7.81	2.58	8.01	2.63	8.42	2.67	8.65	2.69	8.89	2.71	9.42	2.75	10.01	2.79
							39	7.81	2.65	7.87	2.69	8.30	2.73	8.54	2.75	8.79	2.77	9.33	2.81	9.93	2.85
							42	7.81	2.75	7.70	2.79	8.15	2.83	8.40	2.85	8.66	2.87	9.22	2.91	9.85	2.95
							44	7.81	2.82	7.59	2.86	8.06	2.90	8.32	2.92	8.59	2.94	9.17	2.98	9.80	3.02
							46	7.81	2.89	7.50	2.93	7.99	2.97	8.25	2.99	8.53	3.01	9.12	3.05	9.77	3.09
2500	2500	2500	3500		11000	110%	10	7.70	1.88	10.86	1.92	11.06	1.97	11.19	1.99	11.32	2.01	11.64	2.06	12.01	2.10
							12	7.70	1.92	10.56	1.97	10.78	2.02	10.91	2.04	11.06	2.06	11.39	2.10	11.78	2.14
							14	7.70	1.97	10.28	2.02	10.51	2.06	10.65	2.09	10.81	2.11	11.15	2.15	11.56	2.19
							16	7.70	2.02	10.01	2.07	10.26	2.11	10.40	2.14	10.56	2.16	10.93	2.20	11.34	2.24
							18	7.70	2.07	9.75	2.12	10.01	2.16	10.17	2.19	10.34	2.21	10.71	2.25	11.15	2.29
							20	7.70	2.13	9.50	2.17	9.78	2.22	9.94	2.24	10.12	2.26	10.51	2.30	10.96	2.34
							21	7.70	2.15	9.38	2.20	9.67	2.24	9.84	2.27	10.01	2.29	10.41	2.33	10.87	2.37
							23	7.70	2.21	9.15	2.25	9.46	2.30	9.63	2.32	9.82	2.34	10.23	2.38	10.70	2.42
							25	7.70	2.26	8.94	2.31	9.26	2.35	9.44	2.38	9.63	2.40	10.06	2.44	10.54	2.48
							27	7.70	2.32	8.73	2.37	9.07	2.41	9.25	2.43	9.45	2.45	9.90	2.50	10.40	2.54
							29	7.70	2.38	8.54	2.43	8.89	2.47	9.08	2.49	9.29	2.51	9.75	2.55	10.27	2.59
							31	7.70	2.44	8.36	2.49	8.72	2.53	8.93	2.55	9.14	2.57	9.62	2.61	10.15	2.65
							33	7.70	2.50	8.19	2.55	8.57	2.59	8.78	2.61	9.00	2.63	9.49	2.68	10.04	2.71
							35	7.70	2.57	8.04	2.61	8.43	2.66	8.71	2.67	8.88	2.70	9.38	2.74	9.94	2.78
							37	7.70	2.63	7.89	2.68	8.30	2.72	8.52	2.74	8.76	2.76	9.28	2.80	9.86	2.84
							39	7.70	2.70	7.76	2.74	8.18	2.79	8.42	2.81	8.66	2.83	9.20	2.87	9.79	2.91
							42	7.70	2.80	7.58	2.84	8.03	2.89	8.27	2.91	8.53	2.93	9.09	2.97	9.70	3.01
							44	7.70	2.87	7.48	2.91	7.94	2.96	8.19	2.98	8.46	3.00	9.03	3.04	9.66	3.08
							46	7.70	2.94	7.39	2.98	7.87	3.03	8.13	3.05	8.40	3.07	8.99	3.11	9.63	3.15

* All figures comply with EN14511

1. Cooling capacity is based on 27°CDB / 19°CWB (indoor temperature), 35°CDB (outdoor temperature).
2. Heating capacity is based on 20°CDB (indoor temperature), 7°CDB/6°CWB (outdoor temperature).
3. Capacities are based on the following conditions : - Corresponding refrigerant piping length : 5m / - Level difference : 0m
4. The total ability of connected a indoor unit is up to 17.3kW
5. It is impossible to connect the indoor unit for one room only.
6. This data is reference data for temperature capacity trend.

7 AJ100FCJ5EH

1) Cooling

COOLING

Combination (Capacity Index)					Combination (Total)	Combination (%)	Outdoor Temperature (°C, DB)	Indoor Temperature(°C, WB)													
								14		16		18		19		20		22		24	
								TC(kW)	PI(kW)	TC(kW)	PI(kW)	TC(kW)	PI(kW)	TC(kW)	PI(kW)	TC(kW)	PI(kW)	TC(kW)	PI(kW)	TC(kW)	PI(kW)
2500	2500	2500	5000		12500	125%	10	7.95	1.95	11.22	2.00	11.43	2.05	11.56	2.07	11.70	2.10	12.03	2.14	12.41	2.18
							12	7.95	2.00	10.91	2.05	11.14	2.10	11.28	2.12	11.43	2.14	11.77	2.19	12.17	2.23
							14	7.95	2.05	10.62	2.10	10.86	2.15	11.01	2.17	11.17	2.19	11.52	2.24	11.94	2.28
							16	7.95	2.10	10.34	2.15	10.60	2.20	10.75	2.22	10.92	2.25	11.29	2.29	11.72	2.33
							18	7.95	2.16	10.07	2.21	10.35	2.25	10.51	2.28	10.68	2.30	11.07	2.34	11.52	2.38
							20	7.95	2.21	9.82	2.26	10.11	2.31	10.27	2.33	10.46	2.35	10.86	2.40	11.32	2.44
							21	7.95	2.24	9.70	2.29	9.99	2.34	10.16	2.36	10.35	2.38	10.76	2.42	11.23	2.47
							23	7.95	2.30	9.46	2.35	9.77	2.39	9.95	2.42	10.14	2.44	10.57	2.48	11.06	2.52
							25	7.95	2.36	9.23	2.40	9.56	2.45	9.75	2.47	9.95	2.50	10.39	2.54	10.89	2.58
							27	7.95	2.42	9.02	2.46	9.37	2.51	9.56	2.53	9.77	2.56	10.23	2.60	10.75	2.64
							29	7.95	2.48	8.82	2.53	9.18	2.57	9.39	2.59	9.60	2.62	10.08	2.66	10.61	2.70
							31	7.95	2.54	8.64	2.59	9.01	2.63	9.22	2.66	9.45	2.68	9.94	2.72	10.48	2.76
							33	7.95	2.61	8.46	2.65	8.86	2.70	9.07	2.72	9.30	2.74	9.81	2.79	10.37	2.83
							35	7.95	2.67	8.30	2.72	8.71	2.76	9.00	2.78	9.17	2.81	9.69	2.85	10.27	2.89
							37	7.95	2.74	8.15	2.79	8.58	2.83	8.81	2.85	9.06	2.88	9.59	2.92	10.19	2.96
							39	7.95	2.81	8.02	2.86	8.46	2.90	8.70	2.92	8.95	2.94	9.50	2.99	10.11	3.03
							42	7.95	2.91	7.84	2.96	8.30	3.01	8.55	3.03	8.82	3.05	9.39	3.09	10.02	3.13
							44	7.95	2.99	7.73	3.03	8.21	3.08	8.47	3.10	8.74	3.12	9.33	3.16	9.98	3.20
							46	7.95	3.06	7.64	3.11	8.13	3.15	8.40	3.17	8.68	3.19	9.29	3.24	9.95	3.28
2500	2500	2500	6800		14300	143%	10	10.55	1.93	10.96	1.97	11.38	2.01	11.59	2.03	11.81	2.05	12.24	2.09	12.68	2.14
							12	10.36	1.98	10.78	2.02	11.20	2.06	11.41	2.08	11.63	2.11	12.06	2.15	12.50	2.19
							14	10.18	2.03	10.60	2.08	11.02	2.12	11.23	2.14	11.45	2.16	11.88	2.20	12.32	2.24
							16	10.00	2.09	10.42	2.13	10.84	2.17	11.05	2.19	11.27	2.21	11.70	2.26	12.14	2.30
							18	9.82	2.14	10.23	2.18	10.66	2.23	10.87	2.25	11.09	2.27	11.52	2.31	11.97	2.35
							20	9.64	2.20	10.05	2.24	10.48	2.28	10.69	2.30	10.91	2.32	11.35	2.37	11.79	2.41
							21	9.55	2.23	9.96	2.27	10.39	2.31	10.60	2.33	10.82	2.35	11.26	2.40	11.70	2.44
							23	9.36	2.28	9.78	2.33	10.21	2.37	10.43	2.39	10.64	2.41	11.08	2.45	11.52	2.50
							25	9.18	2.34	9.60	2.38	10.03	2.43	10.25	2.45	10.46	2.47	10.90	2.51	11.35	2.56
							27	9.00	2.40	9.43	2.44	9.85	2.49	10.07	2.51	10.29	2.53	10.73	2.57	11.17	2.62
							29	8.83	2.46	9.25	2.50	9.68	2.55	9.89	2.57	10.11	2.59	10.55	2.63	11.00	2.68
							31	8.65	2.52	9.07	2.56	9.50	2.61	9.72	2.63	9.93	2.65	10.37	2.70	10.82	2.74
							33	8.47	2.58	8.89	2.63	9.32	2.67	9.54	2.69	9.76	2.71	10.20	2.76	10.65	2.80
							35	8.29	2.64	8.72	2.69	9.15	2.73	9.38	2.75	9.58	2.78	10.03	2.82	10.47	2.87
							37	8.11	2.71	8.54	2.75	8.97	2.80	9.19	2.82	9.41	2.84	9.85	2.89	10.30	2.93
							39	7.94	2.77	8.36	2.82	8.79	2.86	9.01	2.89	9.23	2.91	9.68	2.95	10.13	3.00
							42	7.67	2.87	8.10	2.92	8.53	2.96	8.75	2.99	8.97	3.01	9.42	3.05	9.87	3.10
							44	7.50	2.94	7.92	2.98	8.36	3.03	8.58	3.05	8.80	3.08	9.24	3.12	9.70	3.17
							46	7.32	3.01	7.75	3.05	8.18	3.10	8.40	3.12	8.63	3.14	9.07	3.19	9.53	3.24
2500	2500	3500	3500		12000	120%	10	7.87	1.91	11.09	1.96	11.30	2.01	11.43	2.03	11.57	2.05	11.90	2.09	12.28	2.14
							12	7.87	1.96	10.79	2.01	11.02	2.05	11.15	2.08	11.30	2.10	11.64	2.14	12.04	2.18
							14	7.87	2.01	10.50	2.06	10.74	2.10	10.89	2.13	11.04	2.15	11.40	2.19	11.81	2.23
							16	7.87	2.06	10.23	2.11	10.48	2.15	10.63	2.18	10.80	2.20	11.17	2.24	11.59	2.28
							18	7.87	2.11	9.96	2.16	10.23	2.21	10.39	2.23	10.56	2.25	10.95	2.29	11.39	2.33
							20	7.87	2.17	9.71	2.21	10.00	2.26	10.16	2.28	10.34	2.30	10.74	2.35	11.20	2.39
							21	7.87	2.19	9.59	2.24	9.88	2.29	10.05	2.31	10.23	2.33	10.64	2.37	11.11	2.41
							23	7.87	2.25	9.35	2.30	9.66	2.34	9.84	2.36	10.03	2.39	10.45	2.43	10.93	2.47
							25	7.87	2.31	9.13	2.35	9.46	2.40	9.64	2.42	9.84	2.44	10.28	2.48	10.77	2.52
							27	7.87	2.36	8.92	2.41	9.26	2.46	9.46	2.48	9.66	2.50	10.12	2.54	10.63	2.58
							29	7.87	2.43	8.73	2.47	9.08	2.52	9.28	2.54	9.50	2.56	9.96	2.60	10.49	2.64
							31	7.87	2.49	8.54	2.53	8.91	2.58	9.12	2.60	9.34	2.62	9.83	2.66	10.37	2.70
							33	7.87	2.55	8.37	2.60	8.76	2.64	8.97	2.66	9.20	2.68	9.70	2.73	10.26	2.76
							35	7.87	2.61	8.21	2.66	8.61	2.71	8.90	2.72	9.07	2.75	9.59	2.79	10.16	2.83
							37	7.87	2.68	8.06	2.73	8.48	2.77	8.71	2.79	8.95	2.81	9.49	2.85	10.07	2.89
							39	7.87	2.75	7.93	2.79	8.36	2.84	8.60	2.86	8.85	2.88	9.40	2.92	10.00	2.96
							42	7.87	2.85	7.75	2.90	8.20	2.94	8.45	2.96	8.72	2.98	9.29	3.02	9.91	3.06
							44	7.87	2.92	7.65	2.97	8.12	3.01	8.37	3.03	8.64	3.05	9.23	3.09	9.87	3.13
							46	7.87	3.00	7.55	3.04	8.04	3.08	8.30	3.11	8.58	3.13	9.18	3.17	9.84	3.20
2500	2500	3500	5000		13500	135%	10	10.34	1.99	10.75	2.03	11.16	2.07	11.37	2.09	11.58	2.11	12.01	2.15	12.44	2.20
							12	10.16	2.04	10.57	2.08	10.99	2.12	11.19	2.15	11.40	2.17	11.83	2.21	12.26	2.25
							14	9.99	2.09	10.39	2.14	10.81	2.18	11.02	2.20	11.23	2.22	11.65	2.26	12.09	2.31
							16	9.81	2.15	10.22	2.19	10.63	2.23	10.84	2.26	11.05	2.28	11.48	2.32	11.91	2.36
							18	9.63	2.20	10.04	2.25	10.45	2.29	10.66	2.31	10.88	2.33	11.30	2.38	11.74	2.42
							20	9.45	2.26	9.86	2.31	10.28	2.35	10.49	2.37	10.70	2.39	11.13	2.44	11.56	2.48
							21	9.36	2.29	9.77	2.33	10.19	2.38	10.40	2.40	10.61	2.42	11.04	2.47	11.48	2.51
							23	9.19	2.35	9.60	2.39	10.01	2.44	10.22	2.46	10.44	2.48	10.87	2.53	11.30	2.57
							25	9.01	2.41	9.42	2.45	9.84	2.50	10.05	2.52	10.26	2.54	10.69	2.59	11.13	2.63
							27	8.83	2.47	9.25	2.51	9.66	2.56	9.88	2.58	10.09	2.60	10.52	2.65	10.96	2.69
							29	8.66	2.53	9.07	2.58	9.49	2.62	9.70	2.64	9.92	2.67	10.35	2.71	10.79	2.76
							31	8.48	2.59	8.90	2.64	9.32	2.68	9.53	2.71	9.74	2.73	10.18	2.77	10.61	2.82
							33	8.31	2.66	8.72	2.70	9.14	2.75	9.36	2.77	9.57	2.79	10.00	2.84	10.44	2.88
							35	8.13	2.72	8.55	2.77	8.97	2.81	9.20	2.83	9.40	2.86	9.83	2.90	10.27	2.95
							37	7.96	2.79	8.37	2.83	8.80	2.88	9.01	2.90	9.23	2.93	9.66	2.97	10.10	3.02
							39	7.78	2.85	8.20	2.90	8.63	2.95	8.84	2.97	9.06	2.99	9.49	3.04	9.93	3.09
							42	7.52	2.96	7.94	3.00	8.37	3.05	8.58	3.07	8.80	3.10	9.24	3.14	9.68	3.19
							44	7.35	3.02	7.77	3.07	8.20	3.12	8.41	3.14	8.63	3.17	9.07	3.21	9.51	3.26
							46	7.18	3.09	7.60	3.14	8.03	3.19	8.24	3.21	8.46	3.24	8.90	3.28	9.34	3.33

* All figures comply with EN14511

1. Cooling capacity is based on 27°CDB / 19°CWB (indoor temperature), 35°CDB (outdoor temperature).
2. Heating capacity is based on 20°CDB (indoor temperature), 7°CDB/6°CWB (outdoor temperature).
3. Capacities are based on the following conditions : - Corresponding refrigerant piping length : 5m / - Level difference : 0m
4. The total ability of connected a indoor unit is up to 17.3kW
5. It is impossible to connect the indoor unit for one room only.
6. This data is reference data for temperature capacity trend.

1) Cooling

COOLING

Combination (Capacity Index)					Combination (Total)	Combination (%)	Outdoor Temperature (°C, DB)	Indoor Temperature(°C, WB)													
								14		16		18		19		20		22		24	
								TC(kW)	PI(kW)	TC(kW)	PI(kW)	TC(kW)	PI(kW)	TC(kW)	PI(kW)	TC(kW)	PI(kW)	TC(kW)	PI(kW)	TC(kW)	PI(kW)
2500	2500	3500	6800		15300	153%	10	11.02	1.97	11.45	2.01	11.89	2.06	12.11	2.08	12.34	2.10	12.79	2.14	13.25	2.18
							12	10.83	2.02	11.26	2.07	11.70	2.11	11.92	2.13	12.15	2.15	12.60	2.19	13.06	2.24
							14	10.64	2.08	11.07	2.12	11.51	2.16	11.74	2.18	11.96	2.21	12.41	2.25	12.87	2.29
							16	10.45	2.13	10.88	2.18	11.32	2.22	11.55	2.24	11.77	2.26	12.23	2.30	12.69	2.35
							18	10.26	2.19	10.69	2.23	11.14	2.27	11.36	2.30	11.58	2.32	12.04	2.36	12.50	2.40
							20	10.07	2.25	10.50	2.29	10.95	2.33	11.17	2.35	11.40	2.38	11.85	2.42	12.32	2.46
							21	9.97	2.27	10.41	2.32	10.85	2.36	11.08	2.38	11.30	2.40	11.76	2.45	12.22	2.49
							23	9.78	2.33	10.22	2.38	10.67	2.42	10.89	2.44	11.12	2.46	11.58	2.51	12.04	2.55
							25	9.60	2.39	10.03	2.44	10.48	2.48	10.71	2.50	10.93	2.52	11.39	2.57	11.86	2.61
							27	9.41	2.45	9.85	2.50	10.29	2.54	10.52	2.56	10.75	2.58	11.21	2.63	11.67	2.67
							29	9.22	2.51	9.66	2.56	10.11	2.60	10.33	2.62	10.56	2.65	11.02	2.69	11.49	2.74
							31	9.03	2.57	9.48	2.62	9.92	2.66	10.15	2.69	10.38	2.71	10.84	2.75	11.31	2.80
							33	8.85	2.64	9.29	2.68	9.74	2.73	9.97	2.75	10.19	2.77	10.66	2.82	11.12	2.86
							35	8.66	2.70	9.11	2.75	9.55	2.79	9.80	2.81	10.01	2.84	10.47	2.88	10.94	2.93
							37	8.48	2.77	8.92	2.81	9.37	2.86	9.60	2.88	9.83	2.90	10.29	2.95	10.76	3.00
							39	8.29	2.83	8.74	2.88	9.19	2.93	9.42	2.95	9.65	2.97	10.11	3.02	10.58	3.06
							42	8.02	2.93	8.46	2.98	8.91	3.03	9.14	3.05	9.37	3.07	9.84	3.12	10.31	3.17
							44	7.83	3.00	8.28	3.05	8.73	3.10	8.96	3.12	9.19	3.14	9.66	3.19	10.13	3.24
							46	7.65	3.07	8.10	3.12	8.55	3.17	8.78	3.19	9.01	3.21	9.48	3.26	9.95	3.31
2500	2500	5000	5000		15000	150%	10	11.02	1.96	11.45	2.01	11.89	2.05	12.11	2.07	12.34	2.09	12.79	2.13	13.25	2.17
							12	10.83	2.02	11.26	2.06	11.70	2.10	11.92	2.12	12.15	2.14	12.60	2.19	13.06	2.23
							14	10.64	2.07	11.07	2.11	11.51	2.16	11.74	2.18	11.96	2.20	12.41	2.24	12.87	2.28
							16	10.45	2.13	10.88	2.17	11.32	2.21	11.55	2.23	11.77	2.25	12.23	2.30	12.69	2.34
							18	10.26	2.18	10.69	2.22	11.14	2.27	11.36	2.29	11.58	2.31	12.04	2.35	12.50	2.40
							20	10.07	2.24	10.50	2.28	10.95	2.32	11.17	2.35	11.40	2.37	11.85	2.41	12.32	2.45
							21	9.97	2.27	10.41	2.31	10.85	2.35	11.08	2.37	11.30	2.40	11.76	2.44	12.22	2.48
							23	9.78	2.32	10.22	2.37	10.67	2.41	10.89	2.43	11.12	2.46	11.58	2.50	12.04	2.54
							25	9.60	2.38	10.03	2.43	10.48	2.47	10.71	2.49	10.93	2.51	11.39	2.56	11.86	2.60
							27	9.41	2.44	9.85	2.49	10.29	2.53	10.52	2.55	10.75	2.58	11.21	2.62	11.67	2.66
							29	9.22	2.50	9.66	2.55	10.11	2.59	10.33	2.62	10.56	2.64	11.02	2.68	11.49	2.73
							31	9.03	2.57	9.48	2.61	9.92	2.66	10.15	2.68	10.38	2.70	10.84	2.75	11.31	2.79
							33	8.85	2.63	9.29	2.67	9.74	2.72	9.97	2.74	10.19	2.76	10.66	2.81	11.12	2.85
							35	8.66	2.69	9.11	2.74	9.55	2.78	9.80	2.80	10.01	2.83	10.47	2.87	10.94	2.92
							37	8.48	2.76	8.92	2.80	9.37	2.85	9.60	2.87	9.83	2.89	10.29	2.94	10.76	2.99
							39	8.29	2.82	8.74	2.87	9.19	2.92	9.42	2.94	9.65	2.96	10.11	3.01	10.58	3.05
							42	8.02	2.92	8.46	2.97	8.91	3.02	9.14	3.04	9.37	3.06	9.84	3.11	10.31	3.16
							44	7.83	2.99	8.28	3.04	8.73	3.09	8.96	3.11	9.19	3.13	9.66	3.18	10.13	3.23
							46	7.65	3.06	8.10	3.11	8.55	3.16	8.78	3.18	9.01	3.20	9.48	3.25	9.95	3.30
2500	2500	5000	6800		16800	168%	10	11.02	2.05	11.45	2.09	11.89	2.14	12.11	2.16	12.34	2.18	12.79	2.22	13.25	2.27
							12	10.83	2.10	11.26	2.15	11.70	2.19	11.92	2.21	12.15	2.24	12.60	2.28	13.06	2.32
							14	10.64	2.16	11.07	2.20	11.51	2.25	11.74	2.27	11.96	2.29	12.41	2.34	12.87	2.38
							16	10.45	2.22	10.88	2.26	11.32	2.31	11.55	2.33	11.77	2.35	12.23	2.39	12.69	2.44
							18	10.26	2.27	10.69	2.32	11.14	2.36	11.36	2.39	11.58	2.41	12.04	2.45	12.50	2.50
							20	10.07	2.33	10.50	2.38	10.95	2.42	11.17	2.45	11.40	2.47	11.85	2.51	12.32	2.56
							21	9.97	2.36	10.41	2.41	10.85	2.45	11.08	2.48	11.30	2.50	11.76	2.54	12.22	2.59
							23	9.78	2.42	10.22	2.47	10.67	2.51	10.89	2.54	11.12	2.56	11.58	2.61	12.04	2.65
							25	9.60	2.49	10.03	2.53	10.48	2.58	10.71	2.60	10.93	2.62	11.39	2.67	11.86	2.71
							27	9.41	2.55	9.85	2.59	10.29	2.64	10.52	2.66	10.75	2.69	11.21	2.73	11.67	2.78
							29	9.22	2.61	9.66	2.66	10.11	2.70	10.33	2.73	10.56	2.75	11.02	2.80	11.49	2.84
							31	9.03	2.68	9.48	2.72	9.92	2.77	10.15	2.79	10.38	2.82	10.84	2.86	11.31	2.91
							33	8.85	2.74	9.29	2.79	9.74	2.84	9.97	2.86	10.19	2.88	10.66	2.93	11.12	2.98
							35	8.66	2.81	9.11	2.86	9.55	2.90	9.80	2.92	10.01	2.95	10.47	3.00	10.94	3.04
							37	8.48	2.88	8.92	2.92	9.37	2.97	9.60	2.99	9.83	3.02	10.29	3.07	10.76	3.11
							39	8.29	2.94	8.74	2.99	9.19	3.04	9.42	3.06	9.65	3.09	10.11	3.14	10.58	3.18
							42	8.02	3.05	8.46	3.10	8.91	3.15	9.14	3.17	9.37	3.19	9.84	3.24	10.31	3.29
							44	7.83	3.12	8.28	3.17	8.73	3.22	8.96	3.24	9.19	3.27	9.66	3.31	10.13	3.36
							46	7.65	3.19	8.10	3.24	8.55	3.29	8.78	3.31	9.01	3.34	9.48	3.39	9.95	3.44
2500	3500	3500	3500		13000	130%	10	10.23	1.95	10.63	1.99	11.04	2.03	11.25	2.05	11.46	2.08	11.88	2.12	12.30	2.16
							12	10.05	2.00	10.46	2.04	10.87	2.09	11.07	2.11	11.28	2.13	11.70	2.17	12.13	2.21
							14	9.88	2.06	10.28	2.10	10.69	2.14	10.90	2.16	11.11	2.18	11.53	2.22	11.95	2.27
							16	9.70	2.11	10.10	2.15	10.51	2.19	10.72	2.22	10.93	2.24	11.35	2.28	11.78	2.32
							18	9.52	2.17	9.93	2.21	10.34	2.25	10.55	2.27	10.76	2.29	11.18	2.34	11.61	2.38
							20	9.35	2.22	9.75	2.26	10.17	2.31	10.37	2.33	10.58	2.35	11.01	2.39	11.44	2.44
							21	9.26	2.25	9.67	2.29	10.08	2.34	10.29	2.36	10.50	2.38	10.92	2.42	11.35	2.47
							23	9.09	2.31	9.49	2.35	9.91	2.39	10.11	2.42	10.32	2.44	10.75	2.48	11.18	2.52
							25	8.91	2.37	9.32	2.41	9.73	2.45	9.94	2.48	10.15	2.50	10.58	2.54	11.01	2.58
							27	8.74	2.43	9.14	2.47	9.56	2.51	9.77	2.54	9.98	2.56	10.41	2.60	10.84	2.65
							29	8.56	2.49	8.97	2.53	9.39	2.57	9.60	2.60	9.81	2.62	10.24	2.66	10.67	2.71
							31	8.39	2.55	8.80	2.59	9.21	2.64	9.43	2.66	9.64	2.68	10.07	2.73	10.50	2.77
							33	8.22	2.61	8.63	2.65	9.04	2.70	9.25	2.72	9.47	2.74	9.90	2.79	10.33	2.83
							35	8.04	2.67	8.45	2.72	8.87	2.76	9.10	2.78	9.30	2.81	9.73	2.85	10.16	2.90
							37	7.87	2.74	8.28	2.78	8.70	2.83	8.91	2.85	9.13	2.87	9.56	2.92	9.99	2.96
							39	7.70	2.80	8.11	2.85	8.53	2.89	8.74	2.92	8.96	2.94	9.39	2.99	9.83	3.03
							42	7.44	2.90	7.86	2.95	8.28	2.99	8.49	3.02	8.70	3.04	9.14	3.09	9.57	3.13
							44	7.27	2.97	7.69	3.02	8.11	3.06	8.32	3.09	8.54	3.11	8.97	3.16	9.41	3.20
							46	7.10	3.04	7.52	3.09	7.94	3.13	8.15	3.16	8.37	3.18	8.80	3.23	9.24	3.27

* All figures comply with EN14511

1. Cooling capacity is based on 27°CDB / 19°CWB (indoor temperature), 35°CDB (outdoor temperature).
2. Heating capacity is based on 20°CDB (indoor temperature), 7°CDB/6°CWB (outdoor temperature).
3. Capacities are based on the following conditions : - Corresponding refrigerant piping length : 5m / - Level difference : 0m
4. The total ability of connected a indoor unit is up to 17.3kW
5. It is impossible to connect the indoor unit for one room only.
6. This data is reference data for temperature capacity trend.

7 AJ100FCJ5EH

1) Cooling

	Combination (Capacity Index)					Combination (Total)	Combination (%)	Outdoor Temperature (°C, DB)	Indoor Temperature(°C, WB)													
									14		16		18		19		20		22		24	
									TC(kW)	PI(kW)	TC(kW)	PI(kW)	TC(kW)	PI(kW)	TC(kW)	PI(kW)	TC(kW)	PI(kW)	TC(kW)	PI(kW)	TC(kW)	PI(kW)
COOLING	2500	3500	3500	5000		14500	145%	10	10.57	1.96	10.98	2.00	11.41	2.04	11.62	2.06	11.83	2.08	12.27	2.12	12.71	2.17
								12	10.39	2.01	10.80	2.05	11.22	2.09	11.44	2.12	11.65	2.14	12.09	2.18	12.53	2.22
								14	10.20	2.06	10.62	2.11	11.04	2.15	11.26	2.17	11.47	2.19	11.91	2.23	12.35	2.27
								16	10.02	2.12	10.44	2.16	10.86	2.20	11.08	2.22	11.29	2.25	11.73	2.29	12.17	2.33
								18	9.84	2.17	10.26	2.22	10.68	2.26	10.90	2.28	11.11	2.30	11.55	2.34	11.99	2.39
								20	9.66	2.23	10.08	2.27	10.50	2.32	10.72	2.34	10.93	2.36	11.37	2.40	11.81	2.45
								21	9.57	2.26	9.99	2.30	10.41	2.34	10.63	2.37	10.84	2.39	11.28	2.43	11.73	2.47
								23	9.38	2.32	9.81	2.36	10.23	2.40	10.45	2.42	10.66	2.45	11.10	2.49	11.55	2.53
								25	9.20	2.37	9.63	2.42	10.05	2.46	10.27	2.48	10.49	2.51	10.93	2.55	11.37	2.59
								27	9.02	2.43	9.45	2.48	9.87	2.52	10.09	2.54	10.31	2.57	10.75	2.61	11.20	2.65
								29	8.84	2.49	9.27	2.54	9.70	2.58	9.91	2.61	10.13	2.63	10.57	2.67	11.02	2.72
								31	8.67	2.56	9.09	2.60	9.52	2.65	9.74	2.67	9.95	2.69	10.40	2.74	10.85	2.78
								33	8.49	2.62	8.91	2.66	9.34	2.71	9.56	2.73	9.78	2.75	10.22	2.80	10.67	2.84
								35	8.31	2.68	8.73	2.73	9.16	2.77	9.40	2.79	9.60	2.82	10.05	2.86	10.50	2.91
								37	8.13	2.75	8.56	2.79	8.99	2.84	9.21	2.86	9.43	2.88	9.87	2.93	10.32	2.98
								39	7.95	2.81	8.38	2.86	8.81	2.90	9.03	2.93	9.25	2.95	9.70	3.00	10.15	3.04
								42	7.69	2.91	8.12	2.96	8.55	3.01	8.77	3.03	8.99	3.05	9.44	3.10	9.89	3.14
								44	7.51	2.98	7.94	3.03	8.38	3.07	8.60	3.10	8.82	3.12	9.26	3.17	9.72	3.21
								46	7.34	3.05	7.77	3.10	8.20	3.14	8.42	3.17	8.64	3.19	9.09	3.24	9.55	3.28
	2500	3500	3500	6800		16300	163%	10	11.02	2.01	11.45	2.05	11.89	2.09	12.11	2.11	12.34	2.14	12.79	2.18	13.25	2.22
								12	10.83	2.06	11.26	2.10	11.70	2.15	11.92	2.17	12.15	2.19	12.60	2.23	13.06	2.28
								14	10.64	2.12	11.07	2.16	11.51	2.20	11.74	2.22	11.96	2.25	12.41	2.29	12.87	2.33
								16	10.45	2.17	10.88	2.21	11.32	2.26	11.55	2.28	11.77	2.30	12.23	2.35	12.69	2.39
								18	10.26	2.23	10.69	2.27	11.14	2.32	11.36	2.34	11.58	2.36	12.04	2.40	12.50	2.45
								20	10.07	2.29	10.50	2.33	10.95	2.37	11.17	2.40	11.40	2.42	11.85	2.46	12.32	2.51
								21	9.97	2.31	10.41	2.36	10.85	2.40	11.08	2.43	11.30	2.45	11.76	2.49	12.22	2.54
								23	9.78	2.37	10.22	2.42	10.67	2.46	10.89	2.49	11.12	2.51	11.58	2.55	12.04	2.60
								25	9.60	2.43	10.03	2.48	10.48	2.52	10.71	2.55	10.93	2.57	11.39	2.61	11.86	2.66
								27	9.41	2.50	9.85	2.54	10.29	2.59	10.52	2.61	10.75	2.63	11.21	2.68	11.67	2.72
								29	9.22	2.56	9.66	2.60	10.11	2.65	10.33	2.67	10.56	2.69	11.02	2.74	11.49	2.79
								31	9.03	2.62	9.48	2.67	9.92	2.71	10.15	2.74	10.38	2.76	10.84	2.80	11.31	2.85
								33	8.85	2.69	9.29	2.73	9.74	2.78	9.97	2.80	10.19	2.82	10.66	2.87	11.12	2.92
								35	8.66	2.75	9.11	2.80	9.55	2.84	9.80	2.86	10.01	2.89	10.47	2.94	10.94	2.98
								37	8.48	2.82	8.92	2.86	9.37	2.91	9.60	2.93	9.83	2.96	10.29	3.00	10.76	3.05
								39	8.29	2.88	8.74	2.93	9.19	2.98	9.42	3.00	9.65	3.02	10.11	3.07	10.58	3.12
								42	8.02	2.99	8.46	3.03	8.91	3.08	9.14	3.10	9.37	3.13	9.84	3.18	10.31	3.22
								44	7.83	3.06	8.28	3.10	8.73	3.15	8.96	3.18	9.19	3.20	9.66	3.25	10.13	3.29
								46	7.65	3.13	8.10	3.17	8.55	3.22	8.78	3.25	9.01	3.27	9.48	3.32	9.95	3.37
	2500	3500	5000	5000		16000	160%	10	11.02	2.00	11.45	2.04	11.89	2.08	12.11	2.11	12.34	2.13	12.79	2.17	13.25	2.21
								12	10.83	2.05	11.26	2.10	11.70	2.14	11.92	2.16	12.15	2.18	12.60	2.22	13.06	2.27
								14	10.64	2.11	11.07	2.15	11.51	2.19	11.74	2.22	11.96	2.24	12.41	2.28	12.87	2.32
								16	10.45	2.16	10.88	2.21	11.32	2.25	11.55	2.27	11.77	2.29	12.23	2.34	12.69	2.38
								18	10.26	2.22	10.69	2.26	11.14	2.31	11.36	2.33	11.58	2.35	12.04	2.39	12.50	2.44
								20	10.07	2.28	10.50	2.32	10.95	2.37	11.17	2.39	11.40	2.41	11.85	2.45	12.32	2.50
								21	9.97	2.31	10.41	2.35	10.85	2.39	11.08	2.42	11.30	2.44	11.76	2.48	12.22	2.53
								23	9.78	2.37	10.22	2.41	10.67	2.45	10.89	2.48	11.12	2.50	11.58	2.54	12.04	2.59
								25	9.60	2.43	10.03	2.47	10.48	2.52	10.71	2.54	10.93	2.56	11.39	2.60	11.86	2.65
								27	9.41	2.49	9.85	2.53	10.29	2.58	10.52	2.60	10.75	2.62	11.21	2.67	11.67	2.71
								29	9.22	2.55	9.66	2.59	10.11	2.64	10.33	2.66	10.56	2.68	11.02	2.73	11.49	2.78
								31	9.03	2.61	9.48	2.66	9.92	2.70	10.15	2.73	10.38	2.75	10.84	2.79	11.31	2.84
								33	8.85	2.68	9.29	2.72	9.74	2.77	9.97	2.79	10.19	2.81	10.66	2.86	11.12	2.91
								35	8.66	2.74	9.11	2.79	9.55	2.83	9.80	2.85	10.01	2.88	10.47	2.93	10.94	2.97
								37	8.48	2.81	8.92	2.85	9.37	2.90	9.60	2.92	9.83	2.95	10.29	2.99	10.76	3.04
								39	8.29	2.87	8.74	2.92	9.19	2.97	9.42	2.99	9.65	3.01	10.11	3.06	10.58	3.11
								42	8.02	2.98	8.46	3.02	8.91	3.07	9.14	3.09	9.37	3.12	9.84	3.16	10.31	3.21
								44	7.83	3.05	8.28	3.09	8.73	3.14	8.96	3.16	9.19	3.19	9.66	3.24	10.13	3.28
								46	7.65	3.12	8.10	3.16	8.55	3.21	8.78	3.24	9.01	3.26	9.48	3.31	9.95	3.35
	3500	3500	3500	3500		14000	140%	10	10.48	1.99	10.89	2.03	11.31	2.07	11.52	2.09	11.73	2.11	12.16	2.15	12.60	2.20
								12	10.30	2.04	10.71	2.08	11.13	2.12	11.34	2.15	11.55	2.17	11.98	2.21	12.42	2.25
								14	10.12	2.09	10.53	2.14	10.95	2.18	11.16	2.20	11.37	2.22	11.81	2.26	12.24	2.31
								16	9.93	2.15	10.35	2.19	10.77	2.23	10.98	2.26	11.20	2.28	11.63	2.32	12.07	2.36
								18	9.75	2.20	10.17	2.25	10.59	2.29	10.80	2.31	11.02	2.33	11.45	2.38	11.89	2.42
								20	9.57	2.26	9.99	2.31	10.41	2.35	10.62	2.37	10.84	2.39	11.27	2.44	11.71	2.48
								21	9.48	2.29	9.90	2.33	10.32	2.38	10.54	2.40	10.75	2.42	11.19	2.47	11.63	2.51
								23	9.30	2.35	9.72	2.39	10.14	2.44	10.36	2.46	10.57	2.48	11.01	2.53	11.45	2.57
								25	9.13	2.41	9.54	2.45	9.97	2.50	10.18	2.52	10.40	2.54	10.83	2.59	11.28	2.63
								27	8.95	2.47	9.37	2.51	9.79	2.56	10.00	2.58	10.22	2.60	10.66	2.65	11.10	2.69
								29	8.77	2.53	9.19	2.58	9.61	2.62	9.83	2.64	10.05	2.67	10.48	2.71	10.93	2.76
								31	8.59	2.59	9.01	2.64	9.44	2.68	9.65	2.71	9.87	2.73	10.31	2.77	10.75	2.82
								33	8.41	2.66	8.84	2.70	9.26	2.75	9.48	2.77	9.70	2.79	10.13	2.84	10.58	2.88
								35	8.24	2.72	8.66	2.77	9.09	2.81	9.32	2.83	9.52	2.86	9.96	2.90	10.41	2.95
								37	8.06	2.79	8.48	2.83	8.91	2.88	9.13	2.90	9.35	2.93	9.79	2.97	10.24	3.02
								39	7.89	2.85	8.31	2.90	8.74	2.95	8.96	2.97	9.17	2.99	9.62	3.04	10.06	3.09
								42	7.62	2.96	8.05	3.00	8.48	3.05	8.70	3.07	8.91	3.10	9.36	3.14	9.81	3.19
								44	7.45	3.02	7.87	3.07	8.30	3.12	8.52	3.14	8.74	3.17	9.19	3.21	9.64	3.26
								46	7.27	3.09	7.70	3.14	8.13	3.19	8.35	3.21	8.57	3.24	9.01	3.28	9.47	3.33

* All figures comply with EN14511

1. Cooling capacity is based on 27°CDB / 19°CWB (indoor temperature), 35°CDB (outdoor temperature).
2. Heating capacity is based on 20°CDB (indoor temperature), 7°CDB/6°CWB (outdoor temperature).
3. Capacities are based on the following conditions : - Corresponding refrigerant piping length : 5m / - Level difference : 0m
4. The total ability of connected a indoor unit is up to 17.3kW
5. It is impossible to connect the indoor unit for one room only.
6. This data is reference data for temperature capacity trend.

1) Cooling

COOLING

Combination (Capacity Index)					Combination (Total)	Combination (%)	Outdoor Temperature (°C, DB)	Indoor Temperature(°C, WB)													
								14		16		18		19		20		22		24	
								TC(kW)	PI(kW)	TC(kW)	PI(kW)	TC(kW)	PI(kW)	TC(kW)	PI(kW)	TC(kW)	PI(kW)	TC(kW)	PI(kW)	TC(kW)	PI(kW)
3500	3500	3500	5000		15500	155%	10	11.02	1.99	11.45	2.04	11.89	2.08	12.11	2.10	12.34	2.12	12.79	2.16	13.25	2.21
							12	10.83	2.05	11.26	2.09	11.70	2.13	11.92	2.15	12.15	2.17	12.60	2.22	13.06	2.26
							14	10.64	2.10	11.07	2.14	11.51	2.19	11.74	2.21	11.96	2.23	12.41	2.27	12.87	2.32
							16	10.45	2.16	10.88	2.20	11.32	2.24	11.55	2.26	11.77	2.29	12.23	2.33	12.69	2.37
							18	10.26	2.21	10.69	2.26	11.14	2.30	11.36	2.32	11.58	2.34	12.04	2.39	12.50	2.43
							20	10.07	2.27	10.50	2.31	10.95	2.36	11.17	2.38	11.40	2.40	11.85	2.45	12.32	2.49
							21	9.97	2.30	10.41	2.34	10.85	2.39	11.08	2.41	11.30	2.43	11.76	2.47	12.22	2.52
							23	9.78	2.36	10.22	2.40	10.67	2.45	10.89	2.47	11.12	2.49	11.58	2.53	12.04	2.58
							25	9.60	2.42	10.03	2.46	10.48	2.51	10.71	2.53	10.93	2.55	11.39	2.60	11.86	2.64
							27	9.41	2.48	9.85	2.52	10.29	2.57	10.52	2.59	10.75	2.61	11.21	2.66	11.67	2.70
							29	9.22	2.54	9.66	2.58	10.11	2.63	10.33	2.65	10.56	2.68	11.02	2.72	11.49	2.77
							31	9.03	2.60	9.48	2.65	9.92	2.69	10.15	2.72	10.38	2.74	10.84	2.78	11.31	2.83
							33	8.85	2.67	9.29	2.71	9.74	2.76	9.97	2.78	10.19	2.80	10.66	2.85	11.12	2.89
							35	8.66	2.73	9.11	2.78	9.55	2.82	9.80	2.84	10.01	2.87	10.47	2.92	10.94	2.96
							37	8.48	2.80	8.92	2.84	9.37	2.89	9.60	2.91	9.83	2.94	10.29	2.98	10.76	3.03
							39	8.29	2.86	8.74	2.91	9.19	2.96	9.42	2.98	9.65	3.00	10.11	3.05	10.58	3.10
							42	8.02	2.97	8.46	3.01	8.91	3.06	9.14	3.08	9.37	3.11	9.84	3.15	10.31	3.20
							44	7.83	3.03	8.28	3.08	8.73	3.13	8.96	3.15	9.19	3.18	9.66	3.22	10.13	3.27
							46	7.65	3.11	8.10	3.15	8.55	3.20	8.78	3.22	9.01	3.25	9.48	3.30	9.95	3.34
3500	3500	3500	6800		17300	173%	10	11.02	2.04	11.45	2.09	11.89	2.13	12.11	2.15	12.34	2.17	12.79	2.22	13.25	2.26
							12	10.83	2.10	11.26	2.14	11.70	2.18	11.92	2.21	12.15	2.23	12.60	2.27	13.06	2.32
							14	10.64	2.15	11.07	2.20	11.51	2.24	11.74	2.26	11.96	2.28	12.41	2.33	12.87	2.37
							16	10.45	2.21	10.88	2.25	11.32	2.30	11.55	2.32	11.77	2.34	12.23	2.39	12.69	2.43
							18	10.26	2.27	10.69	2.31	11.14	2.36	11.36	2.38	11.58	2.40	12.04	2.45	12.50	2.49
							20	10.07	2.33	10.50	2.37	10.95	2.42	11.17	2.44	11.40	2.46	11.85	2.51	12.32	2.55
							21	9.97	2.36	10.41	2.40	10.85	2.45	11.08	2.47	11.30	2.49	11.76	2.54	12.22	2.58
							23	9.78	2.42	10.22	2.46	10.67	2.51	10.89	2.53	11.12	2.55	11.58	2.60	12.04	2.64
							25	9.60	2.48	10.03	2.52	10.48	2.57	10.71	2.59	10.93	2.61	11.39	2.66	11.86	2.71
							27	9.41	2.54	9.85	2.58	10.29	2.63	10.52	2.65	10.75	2.68	11.21	2.72	11.67	2.77
							29	9.22	2.60	9.66	2.65	10.11	2.69	10.33	2.72	10.56	2.74	11.02	2.79	11.49	2.83
							31	9.03	2.67	9.48	2.71	9.92	2.76	10.15	2.78	10.38	2.81	10.84	2.85	11.31	2.90
							33	8.85	2.73	9.29	2.78	9.74	2.83	9.97	2.85	10.19	2.87	10.66	2.92	11.12	2.97
							35	8.66	2.80	9.11	2.85	9.55	2.89	9.80	2.91	10.01	2.94	10.47	2.99	10.94	3.03
							37	8.48	2.87	8.92	2.91	9.37	2.96	9.60	2.98	9.83	3.01	10.29	3.06	10.76	3.10
							39	8.29	2.93	8.74	2.98	9.19	3.03	9.42	3.05	9.65	3.08	10.11	3.13	10.58	3.17
							42	8.02	3.04	8.46	3.09	8.91	3.14	9.14	3.16	9.37	3.18	9.84	3.23	10.31	3.28
							44	7.83	3.11	8.28	3.16	8.73	3.21	8.96	3.23	9.19	3.26	9.66	3.30	10.13	3.35
							46	7.65	3.18	8.10	3.23	8.55	3.28	8.78	3.30	9.01	3.33	9.48	3.38	9.95	3.43
3500	3500	5000	5000		17000	170%	10	11.02	2.04	11.45	2.09	11.89	2.13	12.11	2.15	12.34	2.17	12.79	2.22	13.25	2.26
							12	10.83	2.10	11.26	2.14	11.70	2.18	11.92	2.21	12.15	2.23	12.60	2.27	13.06	2.32
							14	10.64	2.15	11.07	2.20	11.51	2.24	11.74	2.26	11.96	2.28	12.41	2.33	12.87	2.37
							16	10.45	2.21	10.88	2.25	11.32	2.30	11.55	2.32	11.77	2.34	12.23	2.39	12.69	2.43
							18	10.26	2.27	10.69	2.31	11.14	2.36	11.36	2.38	11.58	2.40	12.04	2.45	12.50	2.49
							20	10.07	2.33	10.50	2.37	10.95	2.42	11.17	2.44	11.40	2.46	11.85	2.51	12.32	2.55
							21	9.97	2.36	10.41	2.40	10.85	2.45	11.08	2.47	11.30	2.49	11.76	2.54	12.22	2.58
							23	9.78	2.42	10.22	2.46	10.67	2.51	10.89	2.53	11.12	2.55	11.58	2.60	12.04	2.64
							25	9.60	2.48	10.03	2.52	10.48	2.57	10.71	2.59	10.93	2.61	11.39	2.66	11.86	2.71
							27	9.41	2.54	9.85	2.58	10.29	2.63	10.52	2.65	10.75	2.68	11.21	2.72	11.67	2.77
							29	9.22	2.60	9.66	2.65	10.11	2.69	10.33	2.72	10.56	2.74	11.02	2.79	11.49	2.83
							31	9.03	2.67	9.48	2.71	9.92	2.76	10.15	2.78	10.38	2.81	10.84	2.85	11.31	2.90
							33	8.85	2.73	9.29	2.78	9.74	2.83	9.97	2.85	10.19	2.87	10.66	2.92	11.12	2.97
							35	8.66	2.80	9.11	2.85	9.55	2.89	9.80	2.91	10.01	2.94	10.47	2.99	10.94	3.03
							37	8.48	2.87	8.92	2.91	9.37	2.96	9.60	2.98	9.83	3.01	10.29	3.06	10.76	3.10
							39	8.29	2.93	8.74	2.98	9.19	3.03	9.42	3.05	9.65	3.08	10.11	3.13	10.58	3.17
							42	8.02	3.04	8.46	3.09	8.91	3.14	9.14	3.16	9.37	3.18	9.84	3.23	10.31	3.28
							44	7.83	3.11	8.28	3.16	8.73	3.21	8.96	3.23	9.19	3.26	9.66	3.30	10.13	3.35
							46	7.65	3.18	8.10	3.23	8.55	3.28	8.78	3.30	9.01	3.33	9.48	3.38	9.95	3.43
2000	2000	2000	2000	2000	10000	100%	10	8.40	1.86	11.84	1.91	12.07	1.95	12.20	1.98	12.35	2.00	12.70	2.04	13.10	2.08
							12	8.40	1.91	11.52	1.96	11.76	2.00	11.90	2.02	12.06	2.04	12.42	2.09	12.85	2.13
							14	8.40	1.96	11.21	2.00	11.47	2.05	11.62	2.07	11.79	2.09	12.16	2.13	12.60	2.17
							16	8.40	2.01	10.92	2.05	11.19	2.10	11.35	2.12	11.52	2.14	11.92	2.18	12.37	2.22
							18	8.40	2.06	10.63	2.10	10.92	2.15	11.09	2.17	11.27	2.19	11.68	2.23	12.16	2.27
							20	8.40	2.11	10.36	2.16	10.67	2.20	10.85	2.22	11.04	2.24	11.46	2.28	11.95	2.32
							21	8.40	2.14	10.23	2.18	10.55	2.23	10.73	2.25	10.92	2.27	11.36	2.31	11.86	2.35
							23	8.40	2.19	9.98	2.24	10.32	2.28	10.50	2.30	10.71	2.32	11.16	2.36	11.67	2.40
							25	8.40	2.25	9.75	2.29	10.10	2.34	10.29	2.36	10.50	2.38	10.97	2.42	11.50	2.46
							27	8.40	2.30	9.52	2.35	9.89	2.39	10.09	2.41	10.31	2.44	10.80	2.48	11.34	2.52
							29	8.40	2.36	9.31	2.41	9.69	2.45	9.91	2.47	10.14	2.49	10.64	2.53	11.20	2.57
							31	8.40	2.42	9.12	2.47	9.51	2.51	9.74	2.53	9.97	2.55	10.49	2.59	11.07	2.63
							33	8.40	2.48	8.93	2.53	9.35	2.57	9.58	2.59	9.82	2.61	10.35	2.66	10.95	2.69
							35	8.40	2.55	8.76	2.59	9.19	2.64	9.50	2.65	9.68	2.68	10.23	2.72	10.84	2.76
							37	8.40	2.61	8.61	2.66	9.05	2.70	9.30	2.72	9.56	2.74	10.13	2.78	10.75	2.82
							39	8.40	2.68	8.46	2.72	8.92	2.76	9.18	2.79	9.45	2.81	10.03	2.85	10.67	2.88
							42	8.40	2.78	8.27	2.82	8.76	2.87	9.02	2.89	9.31	2.91	9.91	2.95	10.58	2.98
							44	8.40	2.85	8.16	2.89	8.66	2.93	8.94	2.96	9.23	2.98	9.85	3.01	10.54	3.05
							46	8.40	2.92	8.06	2.96	8.58	3.00	8.86	3.03	9.16	3.05	9.80	3.08	10.50	3.12

* All figures comply with EN14511

1. Cooling capacity is based on 27°CDB / 19°CWB (indoor temperature), 35°CDB (outdoor temperature).
2. Heating capacity is based on 20°CDB (indoor temperature), 7°CDB/6°CWB (outdoor temperature).
3. Capacities are based on the following conditions : - Corresponding refrigerant piping length : 5m / - Level difference : 0m
4. The total ability of connected a indoor unit is up to 17.3kW
5. It is impossible to connect the indoor unit for one room only.
6. This data is reference data for temperature capacity trend.

7 AJ100FCJ5EH

1) Cooling

COOLING

Combination (Capacity Index)					Combination (Total)	Combination (%)	Outdoor Temperature (°C, DB)	Indoor Temperature(°C, WB)													
								14		16		18		19		20		22		24	
								TC(kW)	PI(kW)	TC(kW)	PI(kW)	TC(kW)	PI(kW)	TC(kW)	PI(kW)	TC(kW)	PI(kW)	TC(kW)	PI(kW)	TC(kW)	PI(kW)
2000	2000	2000	2000	2500	10500	105%	10	8.44	1.90	11.91	1.94	12.13	1.99	12.27	2.01	12.42	2.04	12.76	2.08	13.17	2.12
							12	8.44	1.94	11.58	1.99	11.82	2.04	11.97	2.06	12.13	2.08	12.49	2.13	12.91	2.17
							14	8.44	1.99	11.27	2.04	11.53	2.09	11.68	2.11	11.85	2.13	12.23	2.17	12.67	2.22
							16	8.44	2.04	10.97	2.09	11.25	2.14	11.41	2.16	11.58	2.18	11.98	2.22	12.44	2.27
							18	8.44	2.10	10.69	2.14	10.98	2.19	11.15	2.21	11.33	2.23	11.75	2.28	12.22	2.32
							20	8.44	2.15	10.42	2.20	10.73	2.24	10.90	2.26	11.09	2.29	11.52	2.33	12.02	2.37
							21	8.44	2.18	10.29	2.22	10.60	2.27	10.78	2.29	10.98	2.31	11.42	2.35	11.92	2.40
							23	8.44	2.23	10.04	2.28	10.37	2.32	10.56	2.35	10.76	2.37	11.22	2.41	11.73	2.45
							25	8.44	2.29	9.80	2.34	10.15	2.38	10.35	2.40	10.56	2.42	11.03	2.47	11.56	2.51
							27	8.44	2.35	9.57	2.39	9.94	2.44	10.15	2.46	10.37	2.48	10.85	2.52	11.40	2.56
							29	8.44	2.41	9.36	2.45	9.75	2.50	9.96	2.52	10.19	2.54	10.69	2.58	11.26	2.62
							31	8.44	2.47	9.17	2.51	9.56	2.56	9.79	2.58	10.02	2.60	10.54	2.64	11.13	2.68
							33	8.44	2.53	8.98	2.58	9.40	2.62	9.63	2.64	9.87	2.66	10.41	2.71	11.01	2.74
							35	8.44	2.60	8.81	2.64	9.24	2.69	9.55	2.70	9.73	2.73	10.29	2.77	10.90	2.81
							37	8.44	2.66	8.65	2.71	9.10	2.75	9.35	2.77	9.61	2.79	10.18	2.83	10.81	2.87
							39	8.44	2.73	8.51	2.77	8.97	2.82	9.23	2.84	9.50	2.86	10.08	2.90	10.73	2.94
							42	8.44	2.83	8.32	2.88	8.80	2.92	9.07	2.94	9.35	2.96	9.97	3.00	10.64	3.04
							44	8.44	2.90	8.20	2.95	8.71	2.99	8.98	3.01	9.28	3.03	9.90	3.07	10.59	3.11
							46	8.44	2.97	8.11	3.02	8.63	3.06	8.91	3.08	9.21	3.10	9.85	3.14	10.56	3.18
2000	2000	2000	2000	3500	11500	115%	10	8.54	1.93	12.04	1.98	12.27	2.03	12.41	2.05	12.56	2.07	12.91	2.12	13.32	2.16
							12	8.54	1.98	11.71	2.03	11.96	2.08	12.10	2.10	12.27	2.12	12.63	2.17	13.06	2.21
							14	8.54	2.03	11.40	2.08	11.66	2.13	11.82	2.15	11.98	2.17	12.37	2.21	12.82	2.26
							16	8.54	2.08	11.10	2.13	11.38	2.18	11.54	2.20	11.72	2.22	12.12	2.27	12.58	2.31
							18	8.54	2.13	10.81	2.18	11.11	2.23	11.28	2.25	11.46	2.27	11.88	2.32	12.36	2.36
							20	8.54	2.19	10.54	2.24	10.85	2.28	11.03	2.31	11.22	2.33	11.66	2.37	12.15	2.41
							21	8.54	2.22	10.41	2.26	10.73	2.31	10.91	2.33	11.11	2.36	11.55	2.40	12.05	2.44
							23	8.54	2.27	10.15	2.32	10.49	2.37	10.68	2.39	10.89	2.41	11.35	2.45	11.87	2.50
							25	8.54	2.33	9.91	2.38	10.27	2.42	10.46	2.45	10.68	2.47	11.16	2.51	11.69	2.55
							27	8.54	2.39	9.69	2.44	10.05	2.48	10.26	2.51	10.49	2.53	10.98	2.57	11.53	2.61
							29	8.54	2.45	9.47	2.50	9.86	2.54	10.07	2.57	10.31	2.59	10.82	2.63	11.39	2.67
							31	8.54	2.51	9.27	2.56	9.67	2.61	9.90	2.63	10.14	2.65	10.67	2.69	11.25	2.73
							33	8.54	2.58	9.08	2.62	9.50	2.67	9.74	2.69	9.99	2.71	10.53	2.76	11.13	2.80
							35	8.54	2.64	8.91	2.69	9.35	2.73	9.66	2.75	9.85	2.78	10.41	2.82	11.03	2.86
							37	8.54	2.71	8.75	2.76	9.20	2.80	9.45	2.82	9.72	2.84	10.30	2.89	10.93	2.93
							39	8.54	2.78	8.61	2.82	9.08	2.87	9.33	2.89	9.61	2.91	10.20	2.95	10.85	2.99
							42	8.54	2.88	8.41	2.93	8.91	2.97	9.18	3.00	9.46	3.02	10.08	3.06	10.76	3.10
							44	8.54	2.96	8.30	3.00	8.81	3.05	9.09	3.07	9.38	3.09	10.02	3.13	10.71	3.17
							46	8.54	3.03	8.20	3.07	8.73	3.12	9.01	3.14	9.32	3.16	9.97	3.20	10.68	3.24
2000	2000	2000	2000	5000	13000	130%	10	11.24	1.97	11.69	2.01	12.13	2.06	12.36	2.08	12.59	2.10	13.05	2.14	13.52	2.18
							12	11.05	2.02	11.49	2.07	11.94	2.11	12.17	2.13	12.40	2.15	12.86	2.19	13.33	2.24
							14	10.85	2.08	11.30	2.12	11.75	2.16	11.97	2.18	12.20	2.21	12.67	2.25	13.14	2.29
							16	10.66	2.13	11.10	2.18	11.55	2.22	11.78	2.24	12.01	2.26	12.48	2.30	12.95	2.35
							18	10.47	2.19	10.91	2.23	11.36	2.27	11.59	2.30	11.82	2.32	12.29	2.36	12.76	2.40
							20	10.27	2.25	10.72	2.29	11.17	2.33	11.40	2.35	11.63	2.38	12.10	2.42	12.57	2.46
							21	10.18	2.27	10.62	2.32	11.08	2.36	11.30	2.38	11.54	2.40	12.00	2.45	12.47	2.49
							23	9.98	2.33	10.43	2.38	10.88	2.42	11.11	2.44	11.35	2.46	11.81	2.51	12.29	2.55
							25	9.79	2.39	10.24	2.44	10.69	2.48	10.92	2.50	11.16	2.52	11.62	2.57	12.10	2.61
							27	9.60	2.45	10.05	2.50	10.50	2.54	10.73	2.56	10.97	2.58	11.44	2.63	11.91	2.67
							29	9.41	2.51	9.86	2.56	10.32	2.60	10.55	2.62	10.78	2.65	11.25	2.69	11.72	2.74
							31	9.22	2.57	9.67	2.62	10.13	2.66	10.36	2.69	10.59	2.71	11.06	2.75	11.54	2.80
							33	9.03	2.64	9.48	2.68	9.94	2.73	10.17	2.75	10.40	2.77	10.87	2.82	11.35	2.86
							35	8.84	2.70	9.29	2.75	9.75	2.79	10.00	2.81	10.22	2.84	10.69	2.88	11.17	2.93
							37	8.65	2.77	9.10	2.81	9.56	2.86	9.79	2.88	10.03	2.90	10.50	2.95	10.98	3.00
							39	8.46	2.83	8.92	2.88	9.38	2.93	9.61	2.95	9.84	2.97	10.32	3.02	10.80	3.06
							42	8.18	2.93	8.63	2.98	9.10	3.03	9.33	3.05	9.56	3.07	10.04	3.12	10.52	3.17
							44	7.99	3.00	8.45	3.05	8.91	3.10	9.14	3.12	9.38	3.14	9.86	3.19	10.34	3.24
							46	7.80	3.07	8.26	3.12	8.73	3.17	8.96	3.19	9.20	3.21	9.67	3.26	10.16	3.31
2000	2000	2000	2000	6800	14800	148%	10	11.24	1.99	11.69	2.03	12.13	2.07	12.36	2.09	12.59	2.11	13.05	2.15	13.52	2.20
							12	11.05	2.04	11.49	2.08	11.94	2.12	12.17	2.15	12.40	2.17	12.86	2.21	13.33	2.25
							14	10.85	2.09	11.30	2.14	11.75	2.18	11.97	2.20	12.20	2.22	12.67	2.26	13.14	2.31
							16	10.66	2.15	11.10	2.19	11.55	2.23	11.78	2.26	12.01	2.28	12.48	2.32	12.95	2.36
							18	10.47	2.20	10.91	2.25	11.36	2.29	11.59	2.31	11.82	2.33	12.29	2.38	12.76	2.42
							20	10.27	2.26	10.72	2.31	11.17	2.35	11.40	2.37	11.63	2.39	12.10	2.44	12.57	2.48
							21	10.18	2.29	10.62	2.33	11.08	2.38	11.30	2.40	11.54	2.42	12.00	2.47	12.47	2.51
							23	9.98	2.35	10.43	2.39	10.88	2.44	11.11	2.46	11.35	2.48	11.81	2.53	12.29	2.57
							25	9.79	2.41	10.24	2.45	10.69	2.50	10.92	2.52	11.16	2.54	11.62	2.59	12.10	2.63
							27	9.60	2.47	10.05	2.51	10.50	2.56	10.73	2.58	10.97	2.60	11.44	2.65	11.91	2.69
							29	9.41	2.53	9.86	2.58	10.32	2.62	10.55	2.64	10.78	2.67	11.25	2.71	11.72	2.76
							31	9.22	2.59	9.67	2.64	10.13	2.68	10.36	2.71	10.59	2.73	11.06	2.77	11.54	2.82
							33	9.03	2.66	9.48	2.70	9.94	2.75	10.17	2.77	10.40	2.79	10.87	2.84	11.35	2.88
							35	8.84	2.72	9.29	2.77	9.75	2.81	10.00	2.83	10.22	2.86	10.69	2.90	11.17	2.95
							37	8.65	2.79	9.10	2.83	9.56	2.88	9.79	2.90	10.03	2.93	10.50	2.97	10.98	3.02
							39	8.46	2.85	8.92	2.90	9.38	2.95	9.61	2.97	9.84	2.99	10.32	3.04	10.80	3.09
							42	8.18	2.96	8.63	3.00	9.10	3.05	9.33	3.07	9.56	3.10	10.04	3.14	10.52	3.19
							44	7.99	3.02	8.45	3.07	8.91	3.12	9.14	3.14	9.38	3.17	9.86	3.21	10.34	3.26
							46	7.80	3.09	8.26	3.14	8.73	3.19	8.96	3.21	9.20	3.24	9.67	3.28	10.16	3.33

* All figures comply with EN14511

1. Cooling capacity is based on 27°CDB / 19°CWB (indoor temperature), 35°CDB (outdoor temperature).
2. Heating capacity is based on 20°CDB (indoor temperature), 7°CDB/6°CWB (outdoor temperature).
3. Capacities are based on the following conditions : - Corresponding refrigerant piping length : 5m / - Level difference : 0m
4. The total ability of connected a indoor unit is up to 17.3kW
5. It is impossible to connect the indoor unit for one room only.
6. This data is reference data for temperature capacity trend.

1) Cooling

COOLING

Combination (Capacity Index)					Combination (Total)	Combination (%)	Outdoor Temperature (°C, DB)	Indoor Temperature(°C, WB)													
								14		16		18		19		20		22		24	
								TC(kW)	PI(kW)	TC(kW)	PI(kW)	TC(kW)	PI(kW)	TC(kW)	PI(kW)	TC(kW)	PI(kW)	TC(kW)	PI(kW)	TC(kW)	PI(kW)
2000	2000	2000	2500	2500	11000	110%	10	8.49	1.90	11.98	1.94	12.21	1.99	12.34	2.01	12.49	2.04	12.84	2.08	13.26	2.12
							12	8.49	1.94	11.65	1.99	11.90	2.04	12.04	2.06	12.20	2.08	12.57	2.13	13.00	2.17
							14	8.49	1.99	11.34	2.04	11.60	2.09	11.75	2.11	11.92	2.13	12.31	2.17	12.75	2.22
							16	8.49	2.04	11.04	2.09	11.32	2.14	11.48	2.16	11.66	2.18	12.06	2.22	12.52	2.27
							18	8.49	2.10	10.76	2.14	11.05	2.19	11.22	2.21	11.40	2.23	11.82	2.28	12.30	2.32
							20	8.49	2.15	10.48	2.20	10.79	2.24	10.97	2.26	11.16	2.29	11.60	2.33	12.09	2.37
							21	8.49	2.18	10.35	2.22	10.67	2.27	10.85	2.29	11.05	2.31	11.49	2.35	11.99	2.40
							23	8.49	2.23	10.10	2.28	10.43	2.32	10.62	2.35	10.83	2.37	11.29	2.41	11.81	2.45
							25	8.49	2.29	9.86	2.34	10.21	2.38	10.41	2.40	10.62	2.42	11.10	2.47	11.63	2.51
							27	8.49	2.35	9.64	2.39	10.00	2.44	10.21	2.46	10.43	2.48	10.92	2.52	11.47	2.56
							29	8.49	2.41	9.42	2.45	9.81	2.50	10.02	2.52	10.25	2.54	10.76	2.58	11.33	2.62
							31	8.49	2.47	9.22	2.51	9.62	2.56	9.85	2.58	10.09	2.60	10.61	2.64	11.20	2.68
							33	8.49	2.53	9.04	2.58	9.46	2.62	9.69	2.64	9.93	2.66	10.47	2.71	11.08	2.74
							35	8.49	2.60	8.87	2.64	9.30	2.69	9.61	2.70	9.79	2.73	10.35	2.77	10.97	2.81
							37	8.49	2.66	8.71	2.71	9.16	2.75	9.41	2.77	9.67	2.79	10.24	2.83	10.88	2.87
							39	8.49	2.73	8.56	2.77	9.03	2.82	9.28	2.84	9.56	2.86	10.15	2.90	10.80	2.94
							42	8.49	2.83	8.37	2.88	8.86	2.92	9.13	2.94	9.41	2.96	10.03	3.00	10.70	3.04
							44	8.49	2.90	8.26	2.95	8.76	2.99	9.04	3.01	9.33	3.03	9.97	3.07	10.66	3.11
							46	8.49	2.97	8.16	3.02	8.68	3.06	8.97	3.08	9.27	3.10	9.92	3.14	10.63	3.18
2000	2000	2000	2500	3500	12000	120%	10	8.58	1.93	12.10	1.98	12.33	2.03	12.47	2.05	12.62	2.07	12.98	2.12	13.39	2.16
							12	8.58	1.98	11.78	2.03	12.02	2.08	12.17	2.10	12.33	2.12	12.70	2.17	13.13	2.21
							14	8.58	2.03	11.46	2.08	11.72	2.13	11.88	2.15	12.05	2.17	12.43	2.21	12.88	2.26
							16	8.58	2.08	11.16	2.13	11.44	2.18	11.60	2.20	11.78	2.22	12.18	2.27	12.65	2.31
							18	8.58	2.13	10.87	2.18	11.16	2.23	11.34	2.25	11.52	2.27	11.94	2.32	12.42	2.36
							20	8.58	2.19	10.59	2.24	10.91	2.28	11.09	2.31	11.28	2.33	11.72	2.37	12.22	2.41
							21	8.58	2.22	10.46	2.26	10.78	2.31	10.97	2.33	11.16	2.36	11.61	2.40	12.12	2.44
							23	8.58	2.27	10.21	2.32	10.54	2.37	10.74	2.39	10.94	2.41	11.41	2.45	11.93	2.50
							25	8.58	2.33	9.96	2.38	10.32	2.42	10.52	2.45	10.73	2.47	11.21	2.51	11.75	2.55
							27	8.58	2.39	9.74	2.44	10.11	2.48	10.32	2.51	10.54	2.53	11.04	2.57	11.59	2.61
							29	8.58	2.45	9.52	2.50	9.91	2.54	10.13	2.57	10.36	2.59	10.87	2.63	11.45	2.67
							31	8.58	2.51	9.32	2.56	9.72	2.61	9.95	2.63	10.19	2.65	10.72	2.69	11.31	2.73
							33	8.58	2.58	9.13	2.62	9.55	2.67	9.79	2.69	10.04	2.71	10.58	2.76	11.19	2.80
							35	8.58	2.64	8.96	2.69	9.40	2.73	9.71	2.75	9.90	2.78	10.46	2.82	11.08	2.86
							37	8.58	2.71	8.80	2.76	9.25	2.80	9.50	2.82	9.77	2.84	10.35	2.89	10.99	2.93
							39	8.58	2.78	8.65	2.82	9.12	2.87	9.38	2.89	9.66	2.91	10.25	2.95	10.91	2.99
							42	8.58	2.88	8.45	2.93	8.95	2.97	9.22	3.00	9.51	3.02	10.13	3.06	10.82	3.10
							44	8.58	2.96	8.34	3.00	8.86	3.05	9.14	3.07	9.43	3.09	10.07	3.13	10.77	3.17
							46	8.58	3.03	8.24	3.07	8.77	3.12	9.06	3.14	9.36	3.16	10.02	3.20	10.74	3.24
2000	2000	2000	2500	5000	13500	135%	10	11.24	2.01	11.69	2.05	12.13	2.09	12.36	2.11	12.59	2.14	13.05	2.18	13.52	2.22
							12	11.05	2.06	11.49	2.10	11.94	2.15	12.17	2.17	12.40	2.19	12.86	2.23	13.33	2.28
							14	10.85	2.12	11.30	2.16	11.75	2.20	11.97	2.22	12.20	2.25	12.67	2.29	13.14	2.33
							16	10.66	2.17	11.10	2.21	11.55	2.26	11.78	2.28	12.01	2.30	12.48	2.35	12.95	2.39
							18	10.47	2.23	10.91	2.27	11.36	2.32	11.59	2.34	11.82	2.36	12.29	2.40	12.76	2.45
							20	10.27	2.29	10.72	2.33	11.17	2.37	11.40	2.40	11.63	2.42	12.10	2.46	12.57	2.51
							21	10.18	2.31	10.62	2.36	11.08	2.40	11.30	2.43	11.54	2.45	12.00	2.49	12.47	2.54
							23	9.98	2.37	10.43	2.42	10.88	2.46	11.11	2.49	11.35	2.51	11.81	2.55	12.29	2.60
							25	9.79	2.43	10.24	2.48	10.69	2.52	10.92	2.55	11.16	2.57	11.62	2.61	12.10	2.66
							27	9.60	2.50	10.05	2.54	10.50	2.59	10.73	2.61	10.97	2.63	11.44	2.68	11.91	2.72
							29	9.41	2.56	9.86	2.60	10.32	2.65	10.55	2.67	10.78	2.69	11.25	2.74	11.72	2.79
							31	9.22	2.62	9.67	2.67	10.13	2.71	10.36	2.74	10.59	2.76	11.06	2.80	11.54	2.85
							33	9.03	2.69	9.48	2.73	9.94	2.78	10.17	2.80	10.40	2.82	10.87	2.87	11.35	2.92
							35	8.84	2.75	9.29	2.80	9.75	2.84	10.00	2.86	10.22	2.89	10.69	2.94	11.17	2.98
							37	8.65	2.82	9.10	2.86	9.56	2.91	9.79	2.93	10.03	2.96	10.50	3.00	10.98	3.05
							39	8.46	2.88	8.92	2.93	9.38	2.98	9.61	3.00	9.84	3.02	10.32	3.07	10.80	3.12
							42	8.18	2.99	8.63	3.03	9.10	3.08	9.33	3.10	9.56	3.13	10.04	3.18	10.52	3.22
							44	7.99	3.06	8.45	3.10	8.91	3.15	9.14	3.18	9.38	3.20	9.86	3.25	10.34	3.29
							46	7.80	3.13	8.26	3.17	8.73	3.22	8.96	3.25	9.20	3.27	9.67	3.32	10.16	3.37
2000	2000	2000	2500	6800	15300	153%	10	11.24	1.99	11.69	2.03	12.13	2.07	12.36	2.09	12.59	2.11	13.05	2.15	13.52	2.20
							12	11.05	2.04	11.49	2.08	11.94	2.12	12.17	2.15	12.40	2.17	12.86	2.21	13.33	2.25
							14	10.85	2.09	11.30	2.14	11.75	2.18	11.97	2.20	12.20	2.22	12.67	2.26	13.14	2.31
							16	10.66	2.15	11.10	2.19	11.55	2.23	11.78	2.26	12.01	2.28	12.48	2.32	12.95	2.36
							18	10.47	2.20	10.91	2.25	11.36	2.29	11.59	2.31	11.82	2.33	12.29	2.38	12.76	2.42
							20	10.27	2.26	10.72	2.31	11.17	2.35	11.40	2.37	11.63	2.39	12.10	2.44	12.57	2.48
							21	10.18	2.29	10.62	2.33	11.08	2.38	11.30	2.40	11.54	2.42	12.00	2.47	12.47	2.51
							23	9.98	2.35	10.43	2.39	10.88	2.44	11.11	2.46	11.35	2.48	11.81	2.53	12.29	2.57
							25	9.79	2.41	10.24	2.45	10.69	2.50	10.92	2.52	11.16	2.54	11.62	2.59	12.10	2.63
							27	9.60	2.47	10.05	2.51	10.50	2.56	10.73	2.58	10.97	2.60	11.44	2.65	11.91	2.69
							29	9.41	2.53	9.86	2.58	10.32	2.62	10.55	2.64	10.78	2.67	11.25	2.71	11.72	2.76
							31	9.22	2.59	9.67	2.64	10.13	2.68	10.36	2.71	10.59	2.73	11.06	2.77	11.54	2.82
							33	9.03	2.66	9.48	2.70	9.94	2.75	10.17	2.77	10.40	2.79	10.87	2.84	11.35	2.88
							35	8.84	2.72	9.29	2.77	9.75	2.81	10.00	2.83	10.22	2.86	10.69	2.90	11.17	2.95
							37	8.65	2.79	9.10	2.83	9.56	2.88	9.79	2.90	10.03	2.93	10.50	2.97	10.98	3.02
							39	8.46	2.85	8.92	2.90	9.38	2.95	9.61	2.97	9.84	2.99	10.32	3.04	10.80	3.09
							42	8.18	2.96	8.63	3.00	9.10	3.05	9.33	3.07	9.56	3.10	10.04	3.14	10.52	3.19
							44	7.99	3.02	8.45	3.07	8.91	3.12	9.14	3.14	9.38	3.17	9.86	3.21	10.34	3.26
							46	7.80	3.09	8.26	3.14	8.73	3.19	8.96	3.21	9.20	3.24	9.67	3.28	10.16	3.33

* All figures comply with EN14511

1. Cooling capacity is based on 27°CDB / 19°CWB (indoor temperature), 35°CDB (outdoor temperature).
2. Heating capacity is based on 20°CDB (indoor temperature), 7°CDB/6°CWB (outdoor temperature).
3. Capacities are based on the following conditions : - Corresponding refrigerant piping length : 5m / - Level difference : 0m
4. The total ability of connected a indoor unit is up to 17.3kW
5. It is impossible to connect the indoor unit for one room only.
6. This data is reference data for temperature capacity trend.

7 AJ100FCJ5EH

1) Cooling

COOLING

Combination (Capacity Index)					Combination (Total)	Combination (%)	Outdoor Temperature (°C, DB)	Indoor Temperature(°C, WB)													
								14		16		18		19		20		22		24	
								TC(kW)	PI(kW)	TC(kW)	PI(kW)	TC(kW)	PI(kW)	TC(kW)	PI(kW)	TC(kW)	PI(kW)	TC(kW)	PI(kW)	TC(kW)	PI(kW)
2000	2000	2000	3500	3500	13000	130%	10	11.24	1.96	11.69	2.01	12.13	2.05	12.36	2.07	12.59	2.09	13.05	2.13	13.52	2.17
							12	11.05	2.02	11.49	2.06	11.94	2.10	12.17	2.12	12.40	2.14	12.86	2.19	13.33	2.23
							14	10.85	2.07	11.30	2.11	11.75	2.16	11.97	2.18	12.20	2.20	12.67	2.24	13.14	2.28
							16	10.66	2.13	11.10	2.17	11.55	2.21	11.78	2.23	12.01	2.25	12.48	2.30	12.95	2.34
							18	10.47	2.18	10.91	2.22	11.36	2.27	11.59	2.29	11.82	2.31	12.29	2.35	12.76	2.40
							20	10.27	2.24	10.72	2.28	11.17	2.32	11.40	2.35	11.63	2.37	12.10	2.41	12.57	2.45
							21	10.18	2.27	10.62	2.31	11.08	2.35	11.30	2.37	11.54	2.40	12.00	2.44	12.47	2.48
							23	9.98	2.32	10.43	2.37	10.88	2.41	11.11	2.43	11.35	2.46	11.81	2.50	12.29	2.54
							25	9.79	2.38	10.24	2.43	10.69	2.47	10.92	2.49	11.16	2.51	11.62	2.56	12.10	2.60
							27	9.60	2.44	10.05	2.49	10.50	2.53	10.73	2.55	10.97	2.58	11.44	2.62	11.91	2.66
							29	9.41	2.50	9.86	2.55	10.32	2.59	10.55	2.62	10.78	2.64	11.25	2.68	11.72	2.73
							31	9.22	2.57	9.67	2.61	10.13	2.66	10.36	2.68	10.59	2.70	11.06	2.75	11.54	2.79
							33	9.03	2.63	9.48	2.67	9.94	2.72	10.17	2.74	10.40	2.76	10.87	2.81	11.35	2.85
							35	8.84	2.69	9.29	2.74	9.75	2.78	10.00	2.80	10.22	2.83	10.69	2.87	11.17	2.92
							37	8.65	2.76	9.10	2.80	9.56	2.85	9.79	2.87	10.03	2.89	10.50	2.94	10.98	2.99
							39	8.46	2.82	8.92	2.87	9.38	2.92	9.61	2.94	9.84	2.96	10.32	3.01	10.80	3.05
							42	8.18	2.92	8.63	2.97	9.10	3.02	9.33	3.04	9.56	3.06	10.04	3.11	10.52	3.16
							44	7.99	2.99	8.45	3.04	8.91	3.09	9.14	3.11	9.38	3.13	9.86	3.18	10.34	3.23
							46	7.80	3.06	8.26	3.11	8.73	3.16	8.96	3.18	9.20	3.20	9.67	3.25	10.16	3.30
2000	2000	2000	3500	5000	14500	145%	10	11.24	1.98	11.69	2.02	12.13	2.06	12.36	2.08	12.59	2.11	13.05	2.15	13.52	2.19
							12	11.05	2.03	11.49	2.07	11.94	2.12	12.17	2.14	12.40	2.16	12.86	2.20	13.33	2.24
							14	10.85	2.09	11.30	2.13	11.75	2.17	11.97	2.19	12.20	2.21	12.67	2.26	13.14	2.30
							16	10.66	2.14	11.10	2.18	11.55	2.23	11.78	2.25	12.01	2.27	12.48	2.31	12.95	2.36
							18	10.47	2.20	10.91	2.24	11.36	2.28	11.59	2.30	11.82	2.33	12.29	2.37	12.76	2.41
							20	10.27	2.25	10.72	2.30	11.17	2.34	11.40	2.36	11.63	2.38	12.10	2.43	12.57	2.47
							21	10.18	2.28	10.62	2.33	11.08	2.37	11.30	2.39	11.54	2.41	12.00	2.46	12.47	2.50
							23	9.98	2.34	10.43	2.38	10.88	2.43	11.11	2.45	11.35	2.47	11.81	2.52	12.29	2.56
							25	9.79	2.40	10.24	2.44	10.69	2.49	10.92	2.51	11.16	2.53	11.62	2.58	12.10	2.62
							27	9.60	2.46	10.05	2.50	10.50	2.55	10.73	2.57	10.97	2.59	11.44	2.64	11.91	2.68
							29	9.41	2.52	9.86	2.57	10.32	2.61	10.55	2.63	10.78	2.66	11.25	2.70	11.72	2.75
							31	9.22	2.58	9.67	2.63	10.13	2.67	10.36	2.70	10.59	2.72	11.06	2.76	11.54	2.81
							33	9.03	2.65	9.48	2.69	9.94	2.74	10.17	2.76	10.40	2.78	10.87	2.83	11.35	2.87
							35	8.84	2.71	9.29	2.76	9.75	2.80	10.00	2.82	10.22	2.85	10.69	2.89	11.17	2.94
							37	8.65	2.78	9.10	2.82	9.56	2.87	9.79	2.89	10.03	2.92	10.50	2.96	10.98	3.01
							39	8.46	2.84	8.92	2.89	9.38	2.94	9.61	2.96	9.84	2.98	10.32	3.03	10.80	3.07
							42	8.18	2.94	8.63	2.99	9.10	3.04	9.33	3.06	9.56	3.08	10.04	3.13	10.52	3.18
							44	7.99	3.01	8.45	3.06	8.91	3.11	9.14	3.13	9.38	3.15	9.86	3.20	10.34	3.25
							46	7.80	3.08	8.26	3.13	8.73	3.18	8.96	3.20	9.20	3.22	9.67	3.27	10.16	3.32
2000	2000	2000	3500	6800	16300	163%	10	11.24	2.02	11.69	2.06	12.13	2.11	12.36	2.13	12.59	2.15	13.05	2.19	13.52	2.24
							12	11.05	2.07	11.49	2.12	11.94	2.16	12.17	2.18	12.40	2.20	12.86	2.25	13.33	2.29
							14	10.85	2.13	11.30	2.17	11.75	2.22	11.97	2.24	12.20	2.26	12.67	2.30	13.14	2.35
							16	10.66	2.19	11.10	2.23	11.55	2.27	11.78	2.30	12.01	2.32	12.48	2.36	12.95	2.41
							18	10.47	2.24	10.91	2.29	11.36	2.33	11.59	2.35	11.82	2.38	12.29	2.42	12.76	2.46
							20	10.27	2.30	10.72	2.35	11.17	2.39	11.40	2.41	11.63	2.43	12.10	2.48	12.57	2.52
							21	10.18	2.33	10.62	2.38	11.08	2.42	11.30	2.44	11.54	2.46	12.00	2.51	12.47	2.55
							23	9.98	2.39	10.43	2.44	10.88	2.48	11.11	2.50	11.35	2.53	11.81	2.57	12.29	2.62
							25	9.79	2.45	10.24	2.50	10.69	2.54	10.92	2.56	11.16	2.59	11.62	2.63	12.10	2.68
							27	9.60	2.51	10.05	2.56	10.50	2.60	10.73	2.63	10.97	2.65	11.44	2.69	11.91	2.74
							29	9.41	2.58	9.86	2.62	10.32	2.67	10.55	2.69	10.78	2.71	11.25	2.76	11.72	2.80
							31	9.22	2.64	9.67	2.69	10.13	2.73	10.36	2.75	10.59	2.78	11.06	2.82	11.54	2.87
							33	9.03	2.70	9.48	2.75	9.94	2.80	10.17	2.82	10.40	2.84	10.87	2.89	11.35	2.94
							35	8.84	2.77	9.29	2.82	9.75	2.86	10.00	2.88	10.22	2.91	10.69	2.96	11.17	3.00
							37	8.65	2.84	9.10	2.88	9.56	2.93	9.79	2.95	10.03	2.98	10.50	3.02	10.98	3.07
							39	8.46	2.90	8.92	2.95	9.38	3.00	9.61	3.02	9.84	3.05	10.32	3.09	10.80	3.14
							42	8.18	3.01	8.63	3.06	9.10	3.10	9.33	3.13	9.56	3.15	10.04	3.20	10.52	3.25
							44	7.99	3.08	8.45	3.13	8.91	3.17	9.14	3.20	9.38	3.22	9.86	3.27	10.34	3.32
							46	7.80	3.15	8.26	3.20	8.73	3.25	8.96	3.27	9.20	3.29	9.67	3.34	10.16	3.39
2000	2000	2000	5000	5000	16000	160%	10	11.24	2.02	11.69	2.06	12.13	2.11	12.36	2.13	12.59	2.15	13.05	2.19	13.52	2.24
							12	11.05	2.07	11.49	2.12	11.94	2.16	12.17	2.18	12.40	2.20	12.86	2.25	13.33	2.29
							14	10.85	2.13	11.30	2.17	11.75	2.22	11.97	2.24	12.20	2.26	12.67	2.30	13.14	2.35
							16	10.66	2.19	11.10	2.23	11.55	2.27	11.78	2.30	12.01	2.32	12.48	2.36	12.95	2.41
							18	10.47	2.24	10.91	2.29	11.36	2.33	11.59	2.35	11.82	2.38	12.29	2.42	12.76	2.46
							20	10.27	2.30	10.72	2.35	11.17	2.39	11.40	2.41	11.63	2.43	12.10	2.48	12.57	2.52
							21	10.18	2.33	10.62	2.38	11.08	2.42	11.30	2.44	11.54	2.46	12.00	2.51	12.47	2.55
							23	9.98	2.39	10.43	2.44	10.88	2.48	11.11	2.50	11.35	2.53	11.81	2.57	12.29	2.62
							25	9.79	2.45	10.24	2.50	10.69	2.54	10.92	2.56	11.16	2.59	11.62	2.63	12.10	2.68
							27	9.60	2.51	10.05	2.56	10.50	2.60	10.73	2.63	10.97	2.65	11.44	2.69	11.91	2.74
							29	9.41	2.58	9.86	2.62	10.32	2.67	10.55	2.69	10.78	2.71	11.25	2.76	11.72	2.80
							31	9.22	2.64	9.67	2.69	10.13	2.73	10.36	2.75	10.59	2.78	11.06	2.82	11.54	2.87
							33	9.03	2.70	9.48	2.75	9.94	2.80	10.17	2.82	10.40	2.84	10.87	2.89	11.35	2.94
							35	8.84	2.77	9.29	2.82	9.75	2.86	10.00	2.88	10.22	2.91	10.69	2.96	11.17	3.00
							37	8.65	2.84	9.10	2.88	9.56	2.93	9.79	2.95	10.03	2.98	10.50	3.02	10.98	3.07
							39	8.46	2.90	8.92	2.95	9.38	3.00	9.61	3.02	9.84	3.05	10.32	3.09	10.80	3.14
							42	8.18	3.01	8.63	3.06	9.10	3.10	9.33	3.13	9.56	3.15	10.04	3.20	10.52	3.25
							44	7.99	3.08	8.45	3.13	8.91	3.17	9.14	3.20	9.38	3.22	9.86	3.27	10.34	3.32
							46	7.80	3.15	8.26	3.20	8.73	3.25	8.96	3.27	9.20	3.29	9.67	3.34	10.16	3.39

* All figures comply with EN14511

1. Cooling capacity is based on 27°CDB / 19°CWB (indoor temperature), 35°CDB (outdoor temperature).
2. Heating capacity is based on 20°CDB (indoor temperature), 7°CDB/6°CWB (outdoor temperature).
3. Capacities are based on the following conditions : - Corresponding refrigerant piping length : 5m / - Level difference : 0m
4. The total ability of connected a indoor unit is up to 17.3kW
5. It is impossible to connect the indoor unit for one room only.
6. This data is reference data for temperature capacity trend.

1) Cooling

COOLING

Combination (Capacity Index)					Combination (Total)	Combination (%)	Outdoor Temperature (°C, DB)	Indoor Temperature(°C, WB)													
								14		16		18		19		20		22		24	
								TC(kW)	PI(kW)	TC(kW)	PI(kW)	TC(kW)	PI(kW)	TC(kW)	PI(kW)	TC(kW)	PI(kW)	TC(kW)	PI(kW)	TC(kW)	PI(kW)
2000	2000	2500	2500	2500	11500	115%	10	8.54	1.92	12.04	1.97	12.27	2.02	12.41	2.04	12.56	2.07	12.91	2.11	13.32	2.15
							12	8.54	1.97	11.71	2.02	11.96	2.07	12.10	2.09	12.27	2.11	12.63	2.16	13.06	2.20
							14	8.54	2.02	11.40	2.07	11.66	2.12	11.82	2.14	11.98	2.16	12.37	2.21	12.82	2.25
							16	8.54	2.07	11.10	2.12	11.38	2.17	11.54	2.19	11.72	2.21	12.12	2.26	12.58	2.30
							18	8.54	2.13	10.81	2.17	11.11	2.22	11.28	2.24	11.46	2.27	11.88	2.31	12.36	2.35
							20	8.54	2.18	10.54	2.23	10.85	2.28	11.03	2.30	11.22	2.32	11.66	2.36	12.15	2.40
							21	8.54	2.21	10.41	2.26	10.73	2.30	10.91	2.32	11.11	2.35	11.55	2.39	12.05	2.43
							23	8.54	2.27	10.15	2.31	10.49	2.36	10.68	2.38	10.89	2.40	11.35	2.45	11.87	2.49
							25	8.54	2.32	9.91	2.37	10.27	2.42	10.46	2.44	10.68	2.46	11.16	2.50	11.69	2.54
							27	8.54	2.38	9.69	2.43	10.05	2.47	10.26	2.50	10.49	2.52	10.98	2.56	11.53	2.60
							29	8.54	2.44	9.47	2.49	9.86	2.54	10.07	2.56	10.31	2.58	10.82	2.62	11.39	2.66
							31	8.54	2.51	9.27	2.55	9.67	2.60	9.90	2.62	10.14	2.64	10.67	2.68	11.25	2.72
							33	8.54	2.57	9.08	2.62	9.50	2.66	9.74	2.68	9.99	2.70	10.53	2.75	11.13	2.79
							35	8.54	2.63	8.91	2.68	9.35	2.72	9.66	2.74	9.85	2.77	10.41	2.81	11.03	2.85
							37	8.54	2.70	8.75	2.75	9.20	2.79	9.45	2.81	9.72	2.83	10.30	2.88	10.93	2.91
							39	8.54	2.77	8.61	2.81	9.08	2.86	9.33	2.88	9.61	2.90	10.20	2.94	10.85	2.98
							42	8.54	2.87	8.41	2.92	8.91	2.96	9.18	2.98	9.46	3.01	10.08	3.05	10.76	3.09
							44	8.54	2.94	8.30	2.99	8.81	3.03	9.09	3.06	9.38	3.08	10.02	3.12	10.71	3.16
							46	8.54	3.02	8.20	3.06	8.73	3.11	9.01	3.13	9.32	3.15	9.97	3.19	10.68	3.23
2000	2000	2500	2500	3500	12500	125%	10	8.84	1.97	12.47	2.02	12.70	2.06	12.84	2.09	13.00	2.11	13.37	2.16	13.79	2.20
							12	8.84	2.02	12.13	2.07	12.38	2.11	12.53	2.14	12.70	2.16	13.08	2.20	13.52	2.25
							14	8.84	2.07	11.80	2.12	12.07	2.16	12.23	2.19	12.41	2.21	12.80	2.25	13.27	2.30
							16	8.84	2.12	11.49	2.17	11.78	2.22	11.95	2.24	12.13	2.26	12.54	2.31	13.02	2.35
							18	8.84	2.17	11.19	2.22	11.50	2.27	11.67	2.29	11.87	2.32	12.30	2.36	12.80	2.40
							20	8.84	2.23	10.91	2.28	11.23	2.32	11.42	2.35	11.62	2.37	12.07	2.41	12.58	2.46
							21	8.84	2.26	10.77	2.31	11.10	2.35	11.29	2.38	11.50	2.40	11.96	2.44	12.48	2.48
							23	8.84	2.31	10.51	2.36	10.86	2.41	11.06	2.43	11.27	2.46	11.75	2.50	12.29	2.54
							25	8.84	2.37	10.26	2.42	10.63	2.47	10.83	2.49	11.06	2.51	11.55	2.56	12.11	2.60
							27	8.84	2.43	10.03	2.48	10.41	2.53	10.62	2.55	10.86	2.57	11.37	2.62	11.94	2.66
							29	8.84	2.50	9.81	2.54	10.20	2.59	10.43	2.61	10.67	2.64	11.20	2.68	11.79	2.72
							31	8.84	2.56	9.60	2.61	10.02	2.65	10.25	2.68	10.50	2.70	11.04	2.74	11.65	2.78
							33	8.84	2.62	9.40	2.67	9.84	2.72	10.08	2.74	10.34	2.76	10.90	2.81	11.53	2.85
							35	8.84	2.69	9.23	2.74	9.68	2.78	10.00	2.80	10.19	2.83	10.77	2.87	11.41	2.91
							37	8.84	2.76	9.06	2.81	9.53	2.85	9.79	2.87	10.06	2.90	10.66	2.94	11.32	2.98
							39	8.84	2.83	8.91	2.88	9.39	2.92	9.66	2.94	9.94	2.96	10.56	3.01	11.24	3.05
							42	8.84	2.94	8.71	2.98	9.22	3.03	9.50	3.05	9.80	3.07	10.43	3.11	11.14	3.15
							44	8.84	3.01	8.59	3.06	9.12	3.10	9.41	3.12	9.71	3.14	10.37	3.19	11.09	3.23
							46	8.84	3.08	8.49	3.13	9.03	3.17	9.33	3.20	9.64	3.22	10.32	3.26	11.06	3.30
2000	2000	2500	2500	5000	14000	140%	10	11.24	2.01	11.69	2.05	12.13	2.09	12.36	2.11	12.59	2.14	13.05	2.18	13.52	2.22
							12	11.05	2.06	11.49	2.10	11.94	2.15	12.17	2.17	12.40	2.19	12.86	2.23	13.33	2.28
							14	10.85	2.12	11.30	2.16	11.75	2.20	11.97	2.22	12.20	2.25	12.67	2.29	13.14	2.33
							16	10.66	2.17	11.10	2.21	11.55	2.26	11.78	2.28	12.01	2.30	12.48	2.35	12.95	2.39
							18	10.47	2.23	10.91	2.27	11.36	2.32	11.59	2.34	11.82	2.36	12.29	2.40	12.76	2.45
							20	10.27	2.29	10.72	2.33	11.17	2.37	11.40	2.40	11.63	2.42	12.10	2.46	12.57	2.51
							21	10.18	2.31	10.62	2.36	11.08	2.40	11.30	2.43	11.54	2.45	12.00	2.49	12.47	2.54
							23	9.98	2.37	10.43	2.42	10.88	2.46	11.11	2.49	11.35	2.51	11.81	2.55	12.29	2.60
							25	9.79	2.43	10.24	2.48	10.69	2.52	10.92	2.55	11.16	2.57	11.62	2.61	12.10	2.66
							27	9.60	2.50	10.05	2.54	10.50	2.59	10.73	2.61	10.97	2.63	11.44	2.68	11.91	2.72
							29	9.41	2.56	9.86	2.60	10.32	2.65	10.55	2.67	10.78	2.69	11.25	2.74	11.72	2.79
							31	9.22	2.62	9.67	2.67	10.13	2.71	10.36	2.74	10.59	2.76	11.06	2.80	11.54	2.85
							33	9.03	2.69	9.48	2.73	9.94	2.78	10.17	2.80	10.40	2.82	10.87	2.87	11.35	2.92
							35	8.84	2.75	9.29	2.80	9.75	2.84	10.00	2.86	10.22	2.89	10.69	2.94	11.17	2.98
							37	8.65	2.82	9.10	2.86	9.56	2.91	9.79	2.93	10.03	2.96	10.50	3.00	10.98	3.05
							39	8.46	2.88	8.92	2.93	9.38	2.98	9.61	3.00	9.84	3.02	10.32	3.07	10.80	3.12
							42	8.18	2.99	8.63	3.03	9.10	3.08	9.33	3.10	9.56	3.13	10.04	3.18	10.52	3.22
							44	7.99	3.06	8.45	3.10	8.91	3.15	9.14	3.18	9.38	3.20	9.86	3.25	10.34	3.29
							46	7.80	3.13	8.26	3.17	8.73	3.22	8.96	3.25	9.20	3.27	9.67	3.32	10.16	3.37
2000	2000	2500	2500	6800	15800	158%	10	11.24	2.02	11.69	2.06	12.13	2.11	12.36	2.13	12.59	2.15	13.05	2.19	13.52	2.24
							12	11.05	2.07	11.49	2.12	11.94	2.16	12.17	2.18	12.40	2.20	12.86	2.25	13.33	2.29
							14	10.85	2.13	11.30	2.17	11.75	2.22	11.97	2.24	12.20	2.26	12.67	2.30	13.14	2.35
							16	10.66	2.19	11.10	2.23	11.55	2.27	11.78	2.30	12.01	2.32	12.48	2.36	12.95	2.41
							18	10.47	2.24	10.91	2.29	11.36	2.33	11.59	2.35	11.82	2.38	12.29	2.42	12.76	2.46
							20	10.27	2.30	10.72	2.35	11.17	2.39	11.40	2.41	11.63	2.43	12.10	2.48	12.57	2.52
							21	10.18	2.33	10.62	2.38	11.08	2.42	11.30	2.44	11.54	2.46	12.00	2.51	12.47	2.55
							23	9.98	2.39	10.43	2.44	10.88	2.48	11.11	2.50	11.35	2.53	11.81	2.57	12.29	2.62
							25	9.79	2.45	10.24	2.50	10.69	2.54	10.92	2.56	11.16	2.59	11.62	2.63	12.10	2.68
							27	9.60	2.51	10.05	2.56	10.50	2.60	10.73	2.63	10.97	2.65	11.44	2.69	11.91	2.74
							29	9.41	2.58	9.86	2.62	10.32	2.67	10.55	2.69	10.78	2.71	11.25	2.76	11.72	2.80
							31	9.22	2.64	9.67	2.69	10.13	2.73	10.36	2.75	10.59	2.78	11.06	2.82	11.54	2.87
							33	9.03	2.70	9.48	2.75	9.94	2.80	10.17	2.82	10.40	2.84	10.87	2.89	11.35	2.94
							35	8.84	2.77	9.29	2.82	9.75	2.86	10.00	2.88	10.22	2.91	10.69	2.96	11.17	3.00
							37	8.65	2.84	9.10	2.88	9.56	2.93	9.79	2.95	10.03	2.98	10.50	3.02	10.98	3.07
							39	8.46	2.90	8.92	2.95	9.38	3.00	9.61	3.02	9.84	3.05	10.32	3.09	10.80	3.14
							42	8.18	3.01	8.63	3.06	9.10	3.10	9.33	3.13	9.56	3.15	10.04	3.20	10.52	3.25
							44	7.99	3.08	8.45	3.13	8.91	3.17	9.14	3.20	9.38	3.22	9.86	3.27	10.34	3.32
							46	7.80	3.15	8.26	3.20	8.73	3.25	8.96	3.27	9.20	3.29	9.67	3.34	10.16	3.39

* All figures comply with EN14511

1. Cooling capacity is based on 27°CDB / 19°CWB (indoor temperature), 35°CDB (outdoor temperature).
2. Heating capacity is based on 20°CDB (indoor temperature), 7°CDB/6°CWB (outdoor temperature).
3. Capacities are based on the following conditions : - Corresponding refrigerant piping length : 5m / - Level difference : 0m
4. The total ability of connected a indoor unit is up to 17.3kW
5. It is impossible to connect the indoor unit for one room only.
6. This data is reference data for temperature capacity trend.

7 AJ100FCJ5EH

1) Cooling

COOLING

Combination (Capacity Index)					Combination (Total)	Combination (%)	Outdoor Temperature (°C, DB)	Indoor Temperature(°C, WB)													
								14		16		18		19		20		22		24	
								TC(kW)	PI(kW)	TC(kW)	PI(kW)	TC(kW)	PI(kW)	TC(kW)	PI(kW)	TC(kW)	PI(kW)	TC(kW)	PI(kW)	TC(kW)	PI(kW)
2000	2000	2500	3500	3500	13500	135%	10	11.24	2.00	11.69	2.04	12.13	2.08	12.36	2.11	12.59	2.13	13.05	2.17	13.52	2.21
							12	11.05	2.05	11.49	2.10	11.94	2.14	12.17	2.16	12.40	2.18	12.86	2.22	13.33	2.27
							14	10.85	2.11	11.30	2.15	11.75	2.19	11.97	2.22	12.20	2.24	12.67	2.28	13.14	2.32
							16	10.66	2.16	11.10	2.21	11.55	2.25	11.78	2.27	12.01	2.29	12.48	2.34	12.95	2.38
							18	10.47	2.22	10.91	2.26	11.36	2.31	11.59	2.33	11.82	2.35	12.29	2.39	12.76	2.44
							20	10.27	2.28	10.72	2.32	11.17	2.37	11.40	2.39	11.63	2.41	12.10	2.45	12.57	2.50
							21	10.18	2.31	10.62	2.35	11.08	2.39	11.30	2.42	11.54	2.44	12.00	2.48	12.47	2.53
							23	9.98	2.37	10.43	2.41	10.88	2.45	11.11	2.48	11.35	2.50	11.81	2.54	12.29	2.59
							25	9.79	2.43	10.24	2.47	10.69	2.52	10.92	2.54	11.16	2.56	11.62	2.60	12.10	2.65
							27	9.60	2.49	10.05	2.53	10.50	2.58	10.73	2.60	10.97	2.62	11.44	2.67	11.91	2.71
							29	9.41	2.55	9.86	2.59	10.32	2.64	10.55	2.66	10.78	2.68	11.25	2.73	11.72	2.78
							31	9.22	2.61	9.67	2.66	10.13	2.70	10.36	2.73	10.59	2.75	11.06	2.79	11.54	2.84
							33	9.03	2.68	9.48	2.72	9.94	2.77	10.17	2.79	10.40	2.81	10.87	2.86	11.35	2.91
							35	8.84	2.74	9.29	2.79	9.75	2.83	10.00	2.85	10.22	2.88	10.69	2.93	11.17	2.97
							37	8.65	2.81	9.10	2.85	9.56	2.90	9.79	2.92	10.03	2.95	10.50	2.99	10.98	3.04
							39	8.46	2.87	8.92	2.92	9.38	2.97	9.61	2.99	9.84	3.01	10.32	3.06	10.80	3.11
							42	8.18	2.98	8.63	3.02	9.10	3.07	9.33	3.09	9.56	3.12	10.04	3.16	10.52	3.21
							44	7.99	3.05	8.45	3.09	8.91	3.14	9.14	3.16	9.38	3.19	9.86	3.24	10.34	3.28
							46	7.80	3.12	8.26	3.16	8.73	3.21	8.96	3.24	9.20	3.26	9.67	3.31	10.16	3.35
2000	2000	2500	3500	5000	15000	150%	10	11.24	1.98	11.69	2.02	12.13	2.06	12.36	2.08	12.59	2.11	13.05	2.15	13.52	2.19
							12	11.05	2.03	11.49	2.07	11.94	2.12	12.17	2.14	12.40	2.16	12.86	2.20	13.33	2.24
							14	10.85	2.09	11.30	2.13	11.75	2.17	11.97	2.19	12.20	2.21	12.67	2.26	13.14	2.30
							16	10.66	2.14	11.10	2.18	11.55	2.23	11.78	2.25	12.01	2.27	12.48	2.31	12.95	2.36
							18	10.47	2.20	10.91	2.24	11.36	2.28	11.59	2.30	11.82	2.33	12.29	2.37	12.76	2.41
							20	10.27	2.25	10.72	2.30	11.17	2.34	11.40	2.36	11.63	2.38	12.10	2.43	12.57	2.47
							21	10.18	2.28	10.62	2.33	11.08	2.37	11.30	2.39	11.54	2.41	12.00	2.46	12.47	2.50
							23	9.98	2.34	10.43	2.38	10.88	2.43	11.11	2.45	11.35	2.47	11.81	2.52	12.29	2.56
							25	9.79	2.40	10.24	2.44	10.69	2.49	10.92	2.51	11.16	2.53	11.62	2.58	12.10	2.62
							27	9.60	2.46	10.05	2.50	10.50	2.55	10.73	2.57	10.97	2.59	11.44	2.64	11.91	2.68
							29	9.41	2.52	9.86	2.57	10.32	2.61	10.55	2.63	10.78	2.66	11.25	2.70	11.72	2.75
							31	9.22	2.58	9.67	2.63	10.13	2.67	10.36	2.70	10.59	2.72	11.06	2.76	11.54	2.81
							33	9.03	2.65	9.48	2.69	9.94	2.74	10.17	2.76	10.40	2.78	10.87	2.83	11.35	2.87
							35	8.84	2.71	9.29	2.76	9.75	2.80	10.00	2.82	10.22	2.85	10.69	2.89	11.17	2.94
							37	8.65	2.78	9.10	2.82	9.56	2.87	9.79	2.89	10.03	2.92	10.50	2.96	10.98	3.01
							39	8.46	2.84	8.92	2.89	9.38	2.94	9.61	2.96	9.84	2.98	10.32	3.03	10.80	3.07
							42	8.18	2.94	8.63	2.99	9.10	3.04	9.33	3.06	9.56	3.08	10.04	3.13	10.52	3.18
							44	7.99	3.01	8.45	3.06	8.91	3.11	9.14	3.13	9.38	3.15	9.86	3.20	10.34	3.25
							46	7.80	3.08	8.26	3.13	8.73	3.18	8.96	3.20	9.20	3.22	9.67	3.27	10.16	3.32
2000	2000	2500	3500	6800	16800	168%	10	11.24	2.06	11.69	2.10	12.13	2.14	12.36	2.17	12.59	2.19	13.05	2.23	13.52	2.27
							12	11.05	2.11	11.49	2.15	11.94	2.20	12.17	2.22	12.40	2.24	12.86	2.29	13.33	2.33
							14	10.85	2.17	11.30	2.21	11.75	2.26	11.97	2.28	12.20	2.30	12.67	2.34	13.14	2.39
							16	10.66	2.22	11.10	2.27	11.55	2.31	11.78	2.34	12.01	2.36	12.48	2.40	12.95	2.45
							18	10.47	2.28	10.91	2.33	11.36	2.37	11.59	2.39	11.82	2.42	12.29	2.46	12.76	2.51
							20	10.27	2.34	10.72	2.39	11.17	2.43	11.40	2.45	11.63	2.48	12.10	2.52	12.57	2.57
							21	10.18	2.37	10.62	2.42	11.08	2.46	11.30	2.48	11.54	2.51	12.00	2.55	12.47	2.60
							23	9.98	2.43	10.43	2.48	10.88	2.52	11.11	2.55	11.35	2.57	11.81	2.61	12.29	2.66
							25	9.79	2.49	10.24	2.54	10.69	2.59	10.92	2.61	11.16	2.63	11.62	2.68	12.10	2.72
							27	9.60	2.56	10.05	2.60	10.50	2.65	10.73	2.67	10.97	2.70	11.44	2.74	11.91	2.79
							29	9.41	2.62	9.86	2.67	10.32	2.71	10.55	2.74	10.78	2.76	11.25	2.81	11.72	2.85
							31	9.22	2.68	9.67	2.73	10.13	2.78	10.36	2.80	10.59	2.83	11.06	2.87	11.54	2.92
							33	9.03	2.75	9.48	2.80	9.94	2.85	10.17	2.87	10.40	2.89	10.87	2.94	11.35	2.99
							35	8.84	2.82	9.29	2.87	9.75	2.91	10.00	2.93	10.22	2.96	10.69	3.01	11.17	3.06
							37	8.65	2.89	9.10	2.93	9.56	2.98	9.79	3.00	10.03	3.03	10.50	3.08	10.98	3.12
							39	8.46	2.95	8.92	3.00	9.38	3.05	9.61	3.07	9.84	3.10	10.32	3.15	10.80	3.19
							42	8.18	3.06	8.63	3.11	9.10	3.16	9.33	3.18	9.56	3.21	10.04	3.25	10.52	3.30
							44	7.99	3.13	8.45	3.18	8.91	3.23	9.14	3.25	9.38	3.28	9.86	3.33	10.34	3.37
							46	7.80	3.20	8.26	3.25	8.73	3.30	8.96	3.33	9.20	3.35	9.67	3.40	10.16	3.45
2000	2000	2500	5000	5000	16500	165%	10	11.24	2.06	11.69	2.10	12.13	2.14	12.36	2.17	12.59	2.19	13.05	2.23	13.52	2.27
							12	11.05	2.11	11.49	2.15	11.94	2.20	12.17	2.22	12.40	2.24	12.86	2.29	13.33	2.33
							14	10.85	2.17	11.30	2.21	11.75	2.26	11.97	2.28	12.20	2.30	12.67	2.34	13.14	2.39
							16	10.66	2.22	11.10	2.27	11.55	2.31	11.78	2.34	12.01	2.36	12.48	2.40	12.95	2.45
							18	10.47	2.28	10.91	2.33	11.36	2.37	11.59	2.39	11.82	2.42	12.29	2.46	12.76	2.51
							20	10.27	2.34	10.72	2.39	11.17	2.43	11.40	2.45	11.63	2.48	12.10	2.52	12.57	2.57
							21	10.18	2.37	10.62	2.42	11.08	2.46	11.30	2.48	11.54	2.51	12.00	2.55	12.47	2.60
							23	9.98	2.43	10.43	2.48	10.88	2.52	11.11	2.55	11.35	2.57	11.81	2.61	12.29	2.66
							25	9.79	2.49	10.24	2.54	10.69	2.59	10.92	2.61	11.16	2.63	11.62	2.68	12.10	2.72
							27	9.60	2.56	10.05	2.60	10.50	2.65	10.73	2.67	10.97	2.70	11.44	2.74	11.91	2.79
							29	9.41	2.62	9.86	2.67	10.32	2.71	10.55	2.74	10.78	2.76	11.25	2.81	11.72	2.85
							31	9.22	2.68	9.67	2.73	10.13	2.78	10.36	2.80	10.59	2.83	11.06	2.87	11.54	2.92
							33	9.03	2.75	9.48	2.80	9.94	2.85	10.17	2.87	10.40	2.89	10.87	2.94	11.35	2.99
							35	8.84	2.82	9.29	2.87	9.75	2.91	10.00	2.93	10.22	2.96	10.69	3.01	11.17	3.06
							37	8.65	2.89	9.10	2.93	9.56	2.98	9.79	3.00	10.03	3.03	10.50	3.08	10.98	3.12
							39	8.46	2.95	8.92	3.00	9.38	3.05	9.61	3.07	9.84	3.10	10.32	3.15	10.80	3.19
							42	8.18	3.06	8.63	3.11	9.10	3.16	9.33	3.18	9.56	3.21	10.04	3.25	10.52	3.30
							44	7.99	3.13	8.45	3.18	8.91	3.23	9.14	3.25	9.38	3.28	9.86	3.33	10.34	3.37
							46	7.80	3.20	8.26	3.25	8.73	3.30	8.96	3.33	9.20	3.35	9.67	3.40	10.16	3.45

* All figures comply with EN14511

1. Cooling capacity is based on 27°CDB / 19°CWB (indoor temperature), 35°CDB (outdoor temperature).
2. Heating capacity is based on 20°CDB (indoor temperature), 7°CDB/6°CWB (outdoor temperature).
3. Capacities are based on the following conditions : - Corresponding refrigerant piping length : 5m / - Level difference : 0m
4. The total ability of connected a indoor unit is up to 17.3kW
5. It is impossible to connect the indoor unit for one room only.
6. This data is reference data for temperature capacity trend.

1) Cooling

COOLING

Combination (Capacity Index)					Combination (Total)	Combination (%)	Outdoor Temperature (°C, DB)	Indoor Temperature(°C, WB)													
								14		16		18		19		20		22		24	
								TC(kW)	PI(kW)	TC(kW)	PI(kW)	TC(kW)	PI(kW)	TC(kW)	PI(kW)	TC(kW)	PI(kW)	TC(kW)	PI(kW)	TC(kW)	PI(kW)
2000	2000	3500	3500	3500	14500	145%	10	11.24	1.97	11.69	2.01	12.13	2.06	12.36	2.08	12.59	2.10	13.05	2.14	13.52	2.18
							12	11.05	2.02	11.49	2.07	11.94	2.11	12.17	2.13	12.40	2.15	12.86	2.19	13.33	2.24
							14	10.85	2.08	11.30	2.12	11.75	2.16	11.97	2.18	12.20	2.21	12.67	2.25	13.14	2.29
							16	10.66	2.13	11.10	2.18	11.55	2.22	11.78	2.24	12.01	2.26	12.48	2.30	12.95	2.35
							18	10.47	2.19	10.91	2.23	11.36	2.27	11.59	2.30	11.82	2.32	12.29	2.36	12.76	2.40
							20	10.27	2.25	10.72	2.29	11.17	2.33	11.40	2.35	11.63	2.38	12.10	2.42	12.57	2.46
							21	10.18	2.27	10.62	2.32	11.08	2.36	11.30	2.38	11.54	2.40	12.00	2.45	12.47	2.49
							23	9.98	2.33	10.43	2.38	10.88	2.42	11.11	2.44	11.35	2.46	11.81	2.51	12.29	2.55
							25	9.79	2.39	10.24	2.44	10.69	2.48	10.92	2.50	11.16	2.52	11.62	2.57	12.10	2.61
							27	9.60	2.45	10.05	2.50	10.50	2.54	10.73	2.56	10.97	2.58	11.44	2.63	11.91	2.67
							29	9.41	2.51	9.86	2.56	10.32	2.60	10.55	2.62	10.78	2.65	11.25	2.69	11.72	2.74
							31	9.22	2.57	9.67	2.62	10.13	2.66	10.36	2.69	10.59	2.71	11.06	2.75	11.54	2.80
							33	9.03	2.64	9.48	2.68	9.94	2.73	10.17	2.75	10.40	2.77	10.87	2.82	11.35	2.86
							35	8.84	2.70	9.29	2.75	9.75	2.79	10.00	2.81	10.22	2.84	10.69	2.88	11.17	2.93
							37	8.65	2.77	9.10	2.81	9.56	2.86	9.79	2.88	10.03	2.90	10.50	2.95	10.98	3.00
							39	8.46	2.83	8.92	2.88	9.38	2.93	9.61	2.95	9.84	2.97	10.32	3.02	10.80	3.06
							42	8.18	2.93	8.63	2.98	9.10	3.03	9.33	3.05	9.56	3.07	10.04	3.12	10.52	3.17
							44	7.99	3.00	8.45	3.05	8.91	3.10	9.14	3.12	9.38	3.14	9.86	3.19	10.34	3.24
							46	7.80	3.07	8.26	3.12	8.73	3.17	8.96	3.19	9.20	3.21	9.67	3.26	10.16	3.31
2000	2000	3500	3500	5000	16000	160%	10	11.24	2.01	11.69	2.06	12.13	2.10	12.36	2.12	12.59	2.14	13.05	2.19	13.52	2.23
							12	11.05	2.07	11.49	2.11	11.94	2.15	12.17	2.18	12.40	2.20	12.86	2.24	13.33	2.28
							14	10.85	2.12	11.30	2.17	11.75	2.21	11.97	2.23	12.20	2.25	12.67	2.30	13.14	2.34
							16	10.66	2.18	11.10	2.22	11.55	2.27	11.78	2.29	12.01	2.31	12.48	2.35	12.95	2.40
							18	10.47	2.24	10.91	2.28	11.36	2.32	11.59	2.35	11.82	2.37	12.29	2.41	12.76	2.46
							20	10.27	2.29	10.72	2.34	11.17	2.38	11.40	2.40	11.63	2.43	12.10	2.47	12.57	2.52
							21	10.18	2.32	10.62	2.37	11.08	2.41	11.30	2.43	11.54	2.46	12.00	2.50	12.47	2.55
							23	9.98	2.38	10.43	2.43	10.88	2.47	11.11	2.49	11.35	2.52	11.81	2.56	12.29	2.61
							25	9.79	2.44	10.24	2.49	10.69	2.53	10.92	2.56	11.16	2.58	11.62	2.62	12.10	2.67
							27	9.60	2.50	10.05	2.55	10.50	2.59	10.73	2.62	10.97	2.64	11.44	2.69	11.91	2.73
							29	9.41	2.57	9.86	2.61	10.32	2.66	10.55	2.68	10.78	2.70	11.25	2.75	11.72	2.79
							31	9.22	2.63	9.67	2.68	10.13	2.72	10.36	2.74	10.59	2.77	11.06	2.81	11.54	2.86
							33	9.03	2.69	9.48	2.74	9.94	2.79	10.17	2.81	10.40	2.83	10.87	2.88	11.35	2.93
							35	8.84	2.76	9.29	2.81	9.75	2.85	10.00	2.87	10.22	2.90	10.69	2.95	11.17	2.99
							37	8.65	2.83	9.10	2.87	9.56	2.92	9.79	2.94	10.03	2.97	10.50	3.01	10.98	3.06
							39	8.46	2.89	8.92	2.94	9.38	2.99	9.61	3.01	9.84	3.04	10.32	3.08	10.80	3.13
							42	8.18	3.00	8.63	3.04	9.10	3.09	9.33	3.12	9.56	3.14	10.04	3.19	10.52	3.23
							44	7.99	3.07	8.45	3.11	8.91	3.16	9.14	3.19	9.38	3.21	9.86	3.26	10.34	3.31
							46	7.80	3.14	8.26	3.19	8.73	3.23	8.96	3.26	9.20	3.28	9.67	3.33	10.16	3.38
2000	2500	2500	2500	2500	12000	120%	10	8.57	1.92	12.09	1.97	12.32	2.02	12.46	2.04	12.61	2.07	12.96	2.11	13.38	2.15
							12	8.57	1.97	11.76	2.02	12.01	2.07	12.15	2.09	12.32	2.11	12.69	2.16	13.12	2.20
							14	8.57	2.02	11.45	2.07	11.71	2.12	11.86	2.14	12.03	2.16	12.42	2.21	12.87	2.25
							16	8.57	2.07	11.15	2.12	11.42	2.17	11.59	2.19	11.77	2.21	12.17	2.26	12.63	2.30
							18	8.57	2.13	10.86	2.17	11.15	2.22	11.32	2.24	11.51	2.27	11.93	2.31	12.41	2.35
							20	8.57	2.18	10.58	2.23	10.89	2.28	11.07	2.30	11.27	2.32	11.71	2.36	12.20	2.40
							21	8.57	2.21	10.45	2.26	10.77	2.30	10.95	2.32	11.15	2.35	11.60	2.39	12.10	2.43
							23	8.57	2.27	10.19	2.31	10.53	2.36	10.72	2.38	10.93	2.40	11.39	2.45	11.92	2.49
							25	8.57	2.32	9.95	2.37	10.31	2.42	10.51	2.44	10.72	2.46	11.20	2.50	11.74	2.54
							27	8.57	2.38	9.73	2.43	10.10	2.47	10.31	2.50	10.53	2.52	11.02	2.56	11.58	2.60
							29	8.57	2.44	9.51	2.49	9.90	2.54	10.12	2.56	10.35	2.58	10.86	2.62	11.43	2.66
							31	8.57	2.51	9.31	2.55	9.71	2.60	9.94	2.62	10.18	2.64	10.71	2.68	11.30	2.72
							33	8.57	2.57	9.12	2.62	9.54	2.66	9.78	2.68	10.03	2.70	10.57	2.75	11.18	2.79
							35	8.57	2.63	8.95	2.68	9.39	2.72	9.70	2.74	9.89	2.77	10.45	2.81	11.07	2.85
							37	8.57	2.70	8.79	2.75	9.24	2.79	9.49	2.81	9.76	2.83	10.34	2.88	10.98	2.91
							39	8.57	2.77	8.64	2.81	9.11	2.86	9.37	2.88	9.65	2.90	10.24	2.94	10.90	2.98
							42	8.57	2.87	8.45	2.92	8.94	2.96	9.21	2.98	9.50	3.01	10.12	3.05	10.80	3.09
							44	8.57	2.94	8.33	2.99	8.85	3.03	9.13	3.06	9.42	3.08	10.06	3.12	10.76	3.16
							46	8.57	3.02	8.23	3.06	8.76	3.11	9.05	3.13	9.36	3.15	10.01	3.19	10.73	3.23
2000	2500	2500	2500	3500	13000	130%	10	11.24	1.96	11.69	2.01	12.13	2.05	12.36	2.07	12.59	2.09	13.05	2.13	13.52	2.17
							12	11.05	2.02	11.49	2.06	11.94	2.10	12.17	2.12	12.40	2.14	12.86	2.19	13.33	2.23
							14	10.85	2.07	11.30	2.11	11.75	2.16	11.97	2.18	12.20	2.20	12.67	2.24	13.14	2.28
							16	10.66	2.13	11.10	2.17	11.55	2.21	11.78	2.23	12.01	2.25	12.48	2.30	12.95	2.34
							18	10.47	2.18	10.91	2.22	11.36	2.27	11.59	2.29	11.82	2.31	12.29	2.35	12.76	2.40
							20	10.27	2.24	10.72	2.28	11.17	2.32	11.40	2.35	11.63	2.37	12.10	2.41	12.57	2.45
							21	10.18	2.27	10.62	2.31	11.08	2.35	11.30	2.37	11.54	2.40	12.00	2.44	12.47	2.48
							23	9.98	2.32	10.43	2.37	10.88	2.41	11.11	2.43	11.35	2.46	11.81	2.50	12.29	2.54
							25	9.79	2.38	10.24	2.43	10.69	2.47	10.92	2.49	11.16	2.51	11.62	2.56	12.10	2.60
							27	9.60	2.44	10.05	2.49	10.50	2.53	10.73	2.55	10.97	2.58	11.44	2.62	11.91	2.66
							29	9.41	2.50	9.86	2.55	10.32	2.59	10.55	2.62	10.78	2.64	11.25	2.68	11.72	2.73
							31	9.22	2.57	9.67	2.61	10.13	2.66	10.36	2.68	10.59	2.70	11.06	2.75	11.54	2.79
							33	9.03	2.63	9.48	2.67	9.94	2.72	10.17	2.74	10.40	2.76	10.87	2.81	11.35	2.85
							35	8.84	2.69	9.29	2.74	9.75	2.78	10.00	2.80	10.22	2.83	10.69	2.87	11.17	2.92
							37	8.65	2.76	9.10	2.80	9.56	2.85	9.79	2.87	10.03	2.89	10.50	2.94	10.98	2.99
							39	8.46	2.82	8.92	2.87	9.38	2.92	9.61	2.94	9.84	2.96	10.32	3.01	10.80	3.05
							42	8.18	2.92	8.63	2.97	9.10	3.02	9.33	3.04	9.56	3.06	10.04	3.11	10.52	3.16
							44	7.99	2.99	8.45	3.04	8.91	3.09	9.14	3.11	9.38	3.13	9.86	3.18	10.34	3.23
							46	7.80	3.06	8.26	3.11	8.73	3.16	8.96	3.18	9.20	3.20	9.67	3.25	10.16	3.30

* All figures comply with EN14511

1. Cooling capacity is based on 27°CDB / 19°CWB (indoor temperature), 35°CDB (outdoor temperature).
2. Heating capacity is based on 20°CDB (indoor temperature), 7°CDB/6°CWB (outdoor temperature).
3. Capacities are based on the following conditions : - Corresponding refrigerant piping length : 5m / - Level difference : 0m
4. The total ability of connected a indoor unit is up to 17.3kW
5. It is impossible to connect the indoor unit for one room only.
6. This data is reference data for temperature capacity trend.

7 AJ100FCJ5EH

1) Cooling

COOLING

Combination (Capacity Index)					Combination (Total)	Combination (%)	Outdoor Temperature (°C, DB)	Indoor Temperature(°C, WB)													
								14		16		18		19		20		22		24	
								TC(kW)	PI(kW)	TC(kW)	PI(kW)	TC(kW)	PI(kW)	TC(kW)	PI(kW)	TC(kW)	PI(kW)	TC(kW)	PI(kW)	TC(kW)	PI(kW)
2000	2500	2500	2500	5000	14500	145%	10	11.24	1.97	11.69	2.01	12.13	2.06	12.36	2.08	12.59	2.10	13.05	2.14	13.52	2.18
							12	11.05	2.02	11.49	2.07	11.94	2.11	12.17	2.13	12.40	2.15	12.86	2.19	13.33	2.24
							14	10.85	2.08	11.30	2.12	11.75	2.16	11.97	2.18	12.20	2.21	12.67	2.25	13.14	2.29
							16	10.66	2.13	11.10	2.18	11.55	2.22	11.78	2.24	12.01	2.26	12.48	2.30	12.95	2.35
							18	10.47	2.19	10.91	2.23	11.36	2.27	11.59	2.30	11.82	2.32	12.29	2.36	12.76	2.40
							20	10.27	2.25	10.72	2.29	11.17	2.33	11.40	2.35	11.63	2.38	12.10	2.42	12.57	2.46
							21	10.18	2.27	10.62	2.32	11.08	2.36	11.30	2.38	11.54	2.40	12.00	2.45	12.47	2.49
							23	9.98	2.33	10.43	2.38	10.88	2.42	11.11	2.44	11.35	2.46	11.81	2.51	12.29	2.55
							25	9.79	2.39	10.24	2.44	10.69	2.48	10.92	2.50	11.16	2.52	11.62	2.57	12.10	2.61
							27	9.60	2.45	10.05	2.50	10.50	2.54	10.73	2.56	10.97	2.58	11.44	2.63	11.91	2.67
							29	9.41	2.51	9.86	2.56	10.32	2.60	10.55	2.62	10.78	2.65	11.25	2.69	11.72	2.74
							31	9.22	2.57	9.67	2.62	10.13	2.66	10.36	2.69	10.59	2.71	11.06	2.75	11.54	2.80
							33	9.03	2.64	9.48	2.68	9.94	2.73	10.17	2.75	10.40	2.77	10.87	2.82	11.35	2.86
							35	8.84	2.70	9.29	2.75	9.75	2.79	10.00	2.81	10.22	2.84	10.69	2.88	11.17	2.93
							37	8.65	2.77	9.10	2.81	9.56	2.86	9.79	2.88	10.03	2.90	10.50	2.95	10.98	3.00
							39	8.46	2.83	8.92	2.88	9.38	2.93	9.61	2.95	9.84	2.97	10.32	3.02	10.80	3.06
							42	8.18	2.93	8.63	2.98	9.10	3.03	9.33	3.05	9.56	3.07	10.04	3.12	10.52	3.17
							44	7.99	3.00	8.45	3.05	8.91	3.10	9.14	3.12	9.38	3.14	9.86	3.19	10.34	3.24
							46	7.80	3.07	8.26	3.12	8.73	3.17	8.96	3.19	9.20	3.21	9.67	3.26	10.16	3.31
2000	2500	2500	2500	6800	163%	63%	10	11.24	2.02	11.69	2.06	12.13	2.11	12.36	2.13	12.59	2.15	13.05	2.19	13.52	2.24
							12	11.05	2.07	11.49	2.12	11.94	2.16	12.17	2.18	12.40	2.20	12.86	2.25	13.33	2.29
							14	10.85	2.13	11.30	2.17	11.75	2.22	11.97	2.24	12.20	2.26	12.67	2.30	13.14	2.35
							16	10.66	2.19	11.10	2.23	11.55	2.27	11.78	2.30	12.01	2.32	12.48	2.36	12.95	2.41
							18	10.47	2.24	10.91	2.29	11.36	2.33	11.59	2.35	11.82	2.38	12.29	2.42	12.76	2.46
							20	10.27	2.30	10.72	2.35	11.17	2.39	11.40	2.41	11.63	2.43	12.10	2.48	12.57	2.52
							21	10.18	2.33	10.62	2.38	11.08	2.42	11.30	2.44	11.54	2.46	12.00	2.51	12.47	2.55
							23	9.98	2.39	10.43	2.44	10.88	2.48	11.11	2.50	11.35	2.53	11.81	2.57	12.29	2.62
							25	9.79	2.45	10.24	2.50	10.69	2.54	10.92	2.56	11.16	2.59	11.62	2.63	12.10	2.68
							27	9.60	2.51	10.05	2.56	10.50	2.60	10.73	2.63	10.97	2.65	11.44	2.69	11.91	2.74
							29	9.41	2.58	9.86	2.62	10.32	2.67	10.55	2.69	10.78	2.71	11.25	2.76	11.72	2.80
							31	9.22	2.64	9.67	2.69	10.13	2.73	10.36	2.75	10.59	2.78	11.06	2.82	11.54	2.87
							33	9.03	2.70	9.48	2.75	9.94	2.80	10.17	2.82	10.40	2.84	10.87	2.89	11.35	2.94
							35	8.84	2.77	9.29	2.82	9.75	2.86	10.00	2.88	10.22	2.91	10.69	2.96	11.17	3.00
							37	8.65	2.84	9.10	2.88	9.56	2.93	9.79	2.95	10.03	2.98	10.50	3.02	10.98	3.07
							39	8.46	2.90	8.92	2.95	9.38	3.00	9.61	3.02	9.84	3.05	10.32	3.09	10.80	3.14
							42	8.18	3.01	8.63	3.06	9.10	3.10	9.33	3.13	9.56	3.15	10.04	3.20	10.52	3.25
							44	7.99	3.08	8.45	3.13	8.91	3.17	9.14	3.20	9.38	3.22	9.86	3.27	10.34	3.32
							46	7.80	3.15	8.26	3.20	8.73	3.25	8.96	3.27	9.20	3.29	9.67	3.34	10.16	3.39
2000	2500	2500	3500	3500	14000	140%	10	11.24	2.00	11.69	2.04	12.13	2.08	12.36	2.11	12.59	2.13	13.05	2.17	13.52	2.21
							12	11.05	2.05	11.49	2.10	11.94	2.14	12.17	2.16	12.40	2.18	12.86	2.22	13.33	2.27
							14	10.85	2.11	11.30	2.15	11.75	2.19	11.97	2.22	12.20	2.24	12.67	2.28	13.14	2.32
							16	10.66	2.16	11.10	2.21	11.55	2.25	11.78	2.27	12.01	2.29	12.48	2.34	12.95	2.38
							18	10.47	2.22	10.91	2.26	11.36	2.31	11.59	2.33	11.82	2.35	12.29	2.39	12.76	2.44
							20	10.27	2.28	10.72	2.32	11.17	2.37	11.40	2.39	11.63	2.41	12.10	2.45	12.57	2.50
							21	10.18	2.31	10.62	2.35	11.08	2.39	11.30	2.42	11.54	2.44	12.00	2.48	12.47	2.53
							23	9.98	2.37	10.43	2.41	10.88	2.45	11.11	2.48	11.35	2.50	11.81	2.54	12.29	2.59
							25	9.79	2.43	10.24	2.47	10.69	2.52	10.92	2.54	11.16	2.56	11.62	2.60	12.10	2.65
							27	9.60	2.49	10.05	2.53	10.50	2.58	10.73	2.60	10.97	2.62	11.44	2.67	11.91	2.71
							29	9.41	2.55	9.86	2.59	10.32	2.64	10.55	2.66	10.78	2.68	11.25	2.73	11.72	2.78
							31	9.22	2.61	9.67	2.66	10.13	2.70	10.36	2.73	10.59	2.75	11.06	2.79	11.54	2.84
							33	9.03	2.68	9.48	2.72	9.94	2.77	10.17	2.79	10.40	2.81	10.87	2.86	11.35	2.91
							35	8.84	2.74	9.29	2.79	9.75	2.83	10.00	2.85	10.22	2.88	10.69	2.93	11.17	2.97
							37	8.65	2.81	9.10	2.85	9.56	2.90	9.79	2.92	10.03	2.95	10.50	2.99	10.98	3.04
							39	8.46	2.87	8.92	2.92	9.38	2.97	9.61	2.99	9.84	3.01	10.32	3.06	10.80	3.11
							42	8.18	2.98	8.63	3.02	9.10	3.07	9.33	3.09	9.56	3.12	10.04	3.16	10.52	3.21
							44	7.99	3.05	8.45	3.09	8.91	3.14	9.14	3.16	9.38	3.19	9.86	3.24	10.34	3.28
							46	7.80	3.12	8.26	3.16	8.73	3.21	8.96	3.24	9.20	3.26	9.67	3.31	10.16	3.35
2000	2500	2500	3500	5000	15500	155%	10	11.24	2.01	11.69	2.05	12.13	2.09	12.36	2.11	12.59	2.14	13.05	2.18	13.52	2.22
							12	11.05	2.06	11.49	2.10	11.94	2.15	12.17	2.17	12.40	2.19	12.86	2.23	13.33	2.28
							14	10.85	2.12	11.30	2.16	11.75	2.20	11.97	2.22	12.20	2.25	12.67	2.29	13.14	2.33
							16	10.66	2.17	11.10	2.21	11.55	2.26	11.78	2.28	12.01	2.30	12.48	2.35	12.95	2.39
							18	10.47	2.23	10.91	2.27	11.36	2.32	11.59	2.34	11.82	2.36	12.29	2.40	12.76	2.45
							20	10.27	2.29	10.72	2.33	11.17	2.37	11.40	2.40	11.63	2.42	12.10	2.46	12.57	2.51
							21	10.18	2.31	10.62	2.36	11.08	2.40	11.30	2.43	11.54	2.45	12.00	2.49	12.47	2.54
							23	9.98	2.37	10.43	2.42	10.88	2.46	11.11	2.49	11.35	2.51	11.81	2.55	12.29	2.60
							25	9.79	2.43	10.24	2.48	10.69	2.52	10.92	2.55	11.16	2.57	11.62	2.61	12.10	2.66
							27	9.60	2.50	10.05	2.54	10.50	2.59	10.73	2.61	10.97	2.63	11.44	2.68	11.91	2.72
							29	9.41	2.56	9.86	2.60	10.32	2.65	10.55	2.67	10.78	2.69	11.25	2.74	11.72	2.79
							31	9.22	2.62	9.67	2.67	10.13	2.71	10.36	2.74	10.59	2.76	11.06	2.80	11.54	2.85
							33	9.03	2.69	9.48	2.73	9.94	2.78	10.17	2.80	10.40	2.82	10.87	2.87	11.35	2.92
							35	8.84	2.75	9.29	2.80	9.75	2.84	10.00	2.86	10.22	2.89	10.69	2.94	11.17	2.98
							37	8.65	2.82	9.10	2.86	9.56	2.91	9.79	2.93	10.03	2.96	10.50	3.00	10.98	3.05
							39	8.46	2.88	8.92	2.93	9.38	2.98	9.61	3.00	9.84	3.02	10.32	3.07	10.80	3.12
							42	8.18	2.99	8.63	3.03	9.10	3.08	9.33	3.10	9.56	3.13	10.04	3.18	10.52	3.22
							44	7.99	3.06	8.45	3.10	8.91	3.15	9.14	3.18	9.38	3.20	9.86	3.25	10.34	3.29
							46	7.80	3.13	8.26	3.17	8.73	3.22	8.96	3.25	9.20	3.27	9.67	3.32	10.16	3.37

* All figures comply with EN14511

1. Cooling capacity is based on 27°CDB / 19°CWB (indoor temperature), 35°CDB (outdoor temperature).
2. Heating capacity is based on 20°CDB (indoor temperature), 7°CDB/6°CWB (outdoor temperature).
3. Capacities are based on the following conditions : - Corresponding refrigerant piping length : 5m / - Level difference : 0m
4. The total ability of connected a indoor unit is up to 17.3kW
5. It is impossible to connect the indoor unit for one room only.
6. This data is reference data for temperature capacity trend.

1) Cooling

COOLING

Combination (Capacity Index)					Combination (Total)	Combination (%)	Outdoor Temperature (°C, DB)	Indoor Temperature(°C, WB)													
								14		16		18		19		20		22		24	
								TC(kW)	PI(kW)	TC(kW)	PI(kW)	TC(kW)	PI(kW)	TC(kW)	PI(kW)	TC(kW)	PI(kW)	TC(kW)	PI(kW)	TC(kW)	PI(kW)
2000	2500	2500	3500	6800	17300	173%	10	11.24	2.06	11.69	2.10	12.13	2.14	12.36	2.17	12.59	2.19	13.05	2.23	13.52	2.27
							12	11.05	2.11	11.49	2.15	11.94	2.20	12.17	2.22	12.40	2.24	12.86	2.29	13.33	2.33
							14	10.85	2.17	11.30	2.21	11.75	2.26	11.97	2.28	12.20	2.30	12.67	2.34	13.14	2.39
							16	10.66	2.22	11.10	2.27	11.55	2.31	11.78	2.34	12.01	2.36	12.48	2.40	12.95	2.45
							18	10.47	2.28	10.91	2.33	11.36	2.37	11.59	2.39	11.82	2.42	12.29	2.46	12.76	2.51
							20	10.27	2.34	10.72	2.39	11.17	2.43	11.40	2.45	11.63	2.48	12.10	2.52	12.57	2.57
							21	10.18	2.37	10.62	2.42	11.08	2.46	11.30	2.48	11.54	2.51	12.00	2.55	12.47	2.60
							23	9.98	2.43	10.43	2.48	10.88	2.52	11.11	2.55	11.35	2.57	11.81	2.61	12.29	2.66
							25	9.79	2.49	10.24	2.54	10.69	2.59	10.92	2.61	11.16	2.63	11.62	2.68	12.10	2.72
							27	9.60	2.56	10.05	2.60	10.50	2.65	10.73	2.67	10.97	2.70	11.44	2.74	11.91	2.79
							29	9.41	2.62	9.86	2.67	10.32	2.71	10.55	2.74	10.78	2.76	11.25	2.81	11.72	2.85
							31	9.22	2.68	9.67	2.73	10.13	2.78	10.36	2.80	10.59	2.83	11.06	2.87	11.54	2.92
							33	9.03	2.75	9.48	2.80	9.94	2.85	10.17	2.87	10.40	2.89	10.87	2.94	11.35	2.99
							35	8.84	2.82	9.29	2.87	9.75	2.91	10.00	2.93	10.22	2.96	10.69	3.01	11.17	3.06
							37	8.65	2.89	9.10	2.93	9.56	2.98	9.79	3.00	10.03	3.03	10.50	3.08	10.98	3.12
							39	8.46	2.95	8.92	3.00	9.38	3.05	9.61	3.07	9.84	3.10	10.32	3.15	10.80	3.19
							42	8.18	3.06	8.63	3.11	9.10	3.16	9.33	3.18	9.56	3.21	10.04	3.25	10.52	3.30
							44	7.99	3.13	8.45	3.18	8.91	3.23	9.14	3.25	9.38	3.28	9.86	3.33	10.34	3.37
							46	7.80	3.20	8.26	3.25	8.73	3.30	8.96	3.33	9.20	3.35	9.67	3.40	10.16	3.45
2000	2500	2500	5000	5000	17000	170%	10	11.24	2.06	11.69	2.10	12.13	2.14	12.36	2.17	12.59	2.19	13.05	2.23	13.52	2.27
							12	11.05	2.11	11.49	2.15	11.94	2.20	12.17	2.22	12.40	2.24	12.86	2.29	13.33	2.33
							14	10.85	2.17	11.30	2.21	11.75	2.26	11.97	2.28	12.20	2.30	12.67	2.34	13.14	2.39
							16	10.66	2.22	11.10	2.27	11.55	2.31	11.78	2.34	12.01	2.36	12.48	2.40	12.95	2.45
							18	10.47	2.28	10.91	2.33	11.36	2.37	11.59	2.39	11.82	2.42	12.29	2.46	12.76	2.51
							20	10.27	2.34	10.72	2.39	11.17	2.43	11.40	2.45	11.63	2.48	12.10	2.52	12.57	2.57
							21	10.18	2.37	10.62	2.42	11.08	2.46	11.30	2.48	11.54	2.51	12.00	2.55	12.47	2.60
							23	9.98	2.43	10.43	2.48	10.88	2.52	11.11	2.55	11.35	2.57	11.81	2.61	12.29	2.66
							25	9.79	2.49	10.24	2.54	10.69	2.59	10.92	2.61	11.16	2.63	11.62	2.68	12.10	2.72
							27	9.60	2.56	10.05	2.60	10.50	2.65	10.73	2.67	10.97	2.70	11.44	2.74	11.91	2.79
							29	9.41	2.62	9.86	2.67	10.32	2.71	10.55	2.74	10.78	2.76	11.25	2.81	11.72	2.85
							31	9.22	2.68	9.67	2.73	10.13	2.78	10.36	2.80	10.59	2.83	11.06	2.87	11.54	2.92
							33	9.03	2.75	9.48	2.80	9.94	2.85	10.17	2.87	10.40	2.89	10.87	2.94	11.35	2.99
							35	8.84	2.82	9.29	2.87	9.75	2.91	10.00	2.93	10.22	2.96	10.69	3.01	11.17	3.06
							37	8.65	2.89	9.10	2.93	9.56	2.98	9.79	3.00	10.03	3.03	10.50	3.08	10.98	3.12
							39	8.46	2.95	8.92	3.00	9.38	3.05	9.61	3.07	9.84	3.10	10.32	3.15	10.80	3.19
							42	8.18	3.06	8.63	3.11	9.10	3.16	9.33	3.18	9.56	3.21	10.04	3.25	10.52	3.30
							44	7.99	3.13	8.45	3.18	8.91	3.23	9.14	3.25	9.38	3.28	9.86	3.33	10.34	3.37
							46	7.80	3.20	8.26	3.25	8.73	3.30	8.96	3.33	9.20	3.35	9.67	3.40	10.16	3.45
2000	2500	3500	3500	3500	15000	150%	10	11.24	1.97	11.69	2.01	12.13	2.06	12.36	2.08	12.59	2.10	13.05	2.14	13.52	2.18
							12	11.05	2.02	11.49	2.07	11.94	2.11	12.17	2.13	12.40	2.15	12.86	2.19	13.33	2.24
							14	10.85	2.08	11.30	2.12	11.75	2.16	11.97	2.18	12.20	2.21	12.67	2.25	13.14	2.29
							16	10.66	2.13	11.10	2.18	11.55	2.22	11.78	2.24	12.01	2.26	12.48	2.30	12.95	2.35
							18	10.47	2.19	10.91	2.23	11.36	2.27	11.59	2.30	11.82	2.32	12.29	2.36	12.76	2.40
							20	10.27	2.25	10.72	2.29	11.17	2.33	11.40	2.35	11.63	2.38	12.10	2.42	12.57	2.46
							21	10.18	2.27	10.62	2.32	11.08	2.36	11.30	2.38	11.54	2.40	12.00	2.45	12.47	2.49
							23	9.98	2.33	10.43	2.38	10.88	2.42	11.11	2.44	11.35	2.46	11.81	2.51	12.29	2.55
							25	9.79	2.39	10.24	2.44	10.69	2.48	10.92	2.50	11.16	2.52	11.62	2.57	12.10	2.61
							27	9.60	2.45	10.05	2.50	10.50	2.54	10.73	2.56	10.97	2.58	11.44	2.63	11.91	2.67
							29	9.41	2.51	9.86	2.56	10.32	2.60	10.55	2.62	10.78	2.65	11.25	2.69	11.72	2.74
							31	9.22	2.57	9.67	2.62	10.13	2.66	10.36	2.69	10.59	2.71	11.06	2.75	11.54	2.80
							33	9.03	2.64	9.48	2.68	9.94	2.73	10.17	2.75	10.40	2.77	10.87	2.82	11.35	2.86
							35	8.84	2.70	9.29	2.75	9.75	2.79	10.00	2.81	10.22	2.84	10.69	2.88	11.17	2.93
							37	8.65	2.77	9.10	2.81	9.56	2.86	9.79	2.88	10.03	2.90	10.50	2.95	10.98	3.00
							39	8.46	2.83	8.92	2.88	9.38	2.93	9.61	2.95	9.84	2.97	10.32	3.02	10.80	3.06
							42	8.18	2.93	8.63	2.98	9.10	3.03	9.33	3.05	9.56	3.07	10.04	3.12	10.52	3.17
							44	7.99	3.00	8.45	3.05	8.91	3.10	9.14	3.12	9.38	3.14	9.86	3.19	10.34	3.24
							46	7.80	3.07	8.26	3.12	8.73	3.17	8.96	3.19	9.20	3.21	9.67	3.26	10.16	3.31
2000	2500	3500	3500	5000	16500	165%	10	11.24	2.05	11.69	2.09	12.13	2.14	12.36	2.16	12.59	2.18	13.05	2.22	13.52	2.27
							12	11.05	2.10	11.49	2.15	11.94	2.19	12.17	2.21	12.40	2.24	12.86	2.28	13.33	2.32
							14	10.85	2.16	11.30	2.20	11.75	2.25	11.97	2.27	12.20	2.29	12.67	2.34	13.14	2.38
							16	10.66	2.22	11.10	2.26	11.55	2.31	11.78	2.33	12.01	2.35	12.48	2.39	12.95	2.44
							18	10.47	2.27	10.91	2.32	11.36	2.36	11.59	2.39	11.82	2.41	12.29	2.45	12.76	2.50
							20	10.27	2.33	10.72	2.38	11.17	2.42	11.40	2.45	11.63	2.47	12.10	2.51	12.57	2.56
							21	10.18	2.36	10.62	2.41	11.08	2.45	11.30	2.48	11.54	2.50	12.00	2.54	12.47	2.59
							23	9.98	2.42	10.43	2.47	10.88	2.51	11.11	2.54	11.35	2.56	11.81	2.61	12.29	2.65
							25	9.79	2.49	10.24	2.53	10.69	2.58	10.92	2.60	11.16	2.62	11.62	2.67	12.10	2.71
							27	9.60	2.55	10.05	2.59	10.50	2.64	10.73	2.66	10.97	2.69	11.44	2.73	11.91	2.78
							29	9.41	2.61	9.86	2.66	10.32	2.70	10.55	2.73	10.78	2.75	11.25	2.80	11.72	2.84
							31	9.22	2.68	9.67	2.72	10.13	2.77	10.36	2.79	10.59	2.82	11.06	2.86	11.54	2.91
							33	9.03	2.74	9.48	2.79	9.94	2.84	10.17	2.86	10.40	2.88	10.87	2.93	11.35	2.98
							35	8.84	2.81	9.29	2.86	9.75	2.90	10.00	2.92	10.22	2.95	10.69	3.00	11.17	3.04
							37	8.65	2.88	9.10	2.92	9.56	2.97	9.79	2.99	10.03	3.02	10.50	3.07	10.98	3.11
							39	8.46	2.94	8.92	2.99	9.38	3.04	9.61	3.06	9.84	3.09	10.32	3.14	10.80	3.18
							42	8.18	3.05	8.63	3.10	9.10	3.15	9.33	3.17	9.56	3.19	10.04	3.24	10.52	3.29
							44	7.99	3.12	8.45	3.17	8.91	3.22	9.14	3.24	9.38	3.27	9.86	3.31	10.34	3.36
							46	7.80	3.19	8.26	3.24	8.73	3.29	8.96	3.31	9.20	3.34	9.67	3.39	10.16	3.44

* All figures comply with EN14511

1. Cooling capacity is based on 27°CDB / 19°CWB (indoor temperature), 35°CDB (outdoor temperature).
2. Heating capacity is based on 20°CDB (indoor temperature), 7°CDB/6°CWB (outdoor temperature).
3. Capacities are based on the following conditions : - Corresponding refrigerant piping length : 5m / - Level difference : 0m
4. The total ability of connected a indoor unit is up to 17.3kW
5. It is impossible to connect the indoor unit for one room only.
6. This data is reference data for temperature capacity trend.

7 AJ100FCJ5EH

1) Cooling

COOLING

Combination (Capacity Index)					Combination (Total)	Combination (%)	Outdoor Temperature (°C, DB)	Indoor Temperature(°C, WB)													
								14		16		18		19		20		22		24	
								TC(kW)	PI(kW)	TC(kW)	PI(kW)	TC(kW)	PI(kW)	TC(kW)	PI(kW)	TC(kW)	PI(kW)	TC(kW)	PI(kW)	TC(kW)	PI(kW)
2000	3500	3500	3500	3500	16000	160%	10	11.24	2.01	11.69	2.05	12.13	2.09	12.36	2.11	12.59	2.14	13.05	2.18	13.52	2.22
							12	11.05	2.06	11.49	2.10	11.94	2.15	12.17	2.17	12.40	2.19	12.86	2.23	13.33	2.28
							14	10.85	2.12	11.30	2.16	11.75	2.20	11.97	2.22	12.20	2.25	12.67	2.29	13.14	2.33
							16	10.66	2.17	11.10	2.21	11.55	2.26	11.78	2.28	12.01	2.30	12.48	2.35	12.95	2.39
							18	10.47	2.23	10.91	2.27	11.36	2.32	11.59	2.34	11.82	2.36	12.29	2.40	12.76	2.45
							20	10.27	2.29	10.72	2.33	11.17	2.37	11.40	2.40	11.63	2.42	12.10	2.46	12.57	2.51
							21	10.18	2.31	10.62	2.36	11.08	2.40	11.30	2.43	11.54	2.45	12.00	2.49	12.47	2.54
							23	9.98	2.37	10.43	2.42	10.88	2.46	11.11	2.49	11.35	2.51	11.81	2.55	12.29	2.60
							25	9.79	2.43	10.24	2.48	10.69	2.52	10.92	2.55	11.16	2.57	11.62	2.61	12.10	2.66
							27	9.60	2.50	10.05	2.54	10.50	2.59	10.73	2.61	10.97	2.63	11.44	2.68	11.91	2.72
							29	9.41	2.56	9.86	2.60	10.32	2.65	10.55	2.67	10.78	2.69	11.25	2.74	11.72	2.79
							31	9.22	2.62	9.67	2.67	10.13	2.71	10.36	2.74	10.59	2.76	11.06	2.80	11.54	2.85
							33	9.03	2.69	9.48	2.73	9.94	2.78	10.17	2.80	10.40	2.82	10.87	2.87	11.35	2.92
							35	8.84	2.75	9.29	2.80	9.75	2.84	10.00	2.86	10.22	2.89	10.69	2.94	11.17	2.98
							37	8.65	2.82	9.10	2.86	9.56	2.91	9.79	2.93	10.03	2.96	10.50	3.00	10.98	3.05
							39	8.46	2.88	8.92	2.93	9.38	2.98	9.61	3.00	9.84	3.02	10.32	3.07	10.80	3.12
							42	8.18	2.99	8.63	3.03	9.10	3.08	9.33	3.10	9.56	3.13	10.04	3.18	10.52	3.22
							44	7.99	3.06	8.45	3.10	8.91	3.15	9.14	3.18	9.38	3.20	9.86	3.25	10.34	3.29
							46	7.80	3.13	8.26	3.17	8.73	3.22	8.96	3.25	9.20	3.27	9.67	3.32	10.16	3.37
2500	2500	2500	2500	2500	12500	125%	10	8.84	2.04	12.47	2.09	12.70	2.14	12.84	2.16	13.00	2.19	13.37	2.23	13.79	2.28
							12	8.84	2.09	12.13	2.14	12.38	2.19	12.53	2.21	12.70	2.24	13.08	2.28	13.52	2.33
							14	8.84	2.14	11.80	2.19	12.07	2.24	12.23	2.27	12.41	2.29	12.80	2.34	13.27	2.38
							16	8.84	2.20	11.49	2.25	11.78	2.30	11.95	2.32	12.13	2.34	12.54	2.39	13.02	2.43
							18	8.84	2.25	11.19	2.30	11.50	2.35	11.67	2.37	11.87	2.40	12.30	2.44	12.80	2.49
							20	8.84	2.31	10.91	2.36	11.23	2.41	11.42	2.43	11.62	2.46	12.07	2.50	12.58	2.54
							21	8.84	2.34	10.77	2.39	11.10	2.44	11.29	2.46	11.50	2.48	11.96	2.53	12.48	2.57
							23	8.84	2.40	10.51	2.45	10.86	2.50	11.06	2.52	11.27	2.54	11.75	2.59	12.29	2.63
							25	8.84	2.46	10.26	2.51	10.63	2.56	10.83	2.58	11.06	2.60	11.55	2.65	12.11	2.69
							27	8.84	2.52	10.03	2.57	10.41	2.62	10.62	2.64	10.86	2.67	11.37	2.71	11.94	2.75
							29	8.84	2.59	9.81	2.64	10.20	2.68	10.43	2.71	10.67	2.73	11.20	2.77	11.79	2.82
							31	8.84	2.65	9.60	2.70	10.02	2.75	10.25	2.77	10.50	2.79	11.04	2.84	11.65	2.88
							33	8.84	2.72	9.40	2.77	9.84	2.82	10.08	2.84	10.34	2.86	10.90	2.91	11.53	2.95
							35	8.84	2.79	9.23	2.84	9.68	2.88	10.00	2.90	10.19	2.93	10.77	2.97	11.41	3.02
							37	8.84	2.86	9.06	2.91	9.53	2.95	9.79	2.98	10.06	3.00	10.66	3.04	11.32	3.09
							39	8.84	2.93	8.91	2.98	9.39	3.03	9.66	3.05	9.94	3.07	10.56	3.11	11.24	3.16
							42	8.84	3.04	8.71	3.09	9.22	3.14	9.50	3.16	9.80	3.18	10.43	3.22	11.14	3.27
							44	8.84	3.12	8.59	3.16	9.12	3.21	9.41	3.23	9.71	3.26	10.37	3.30	11.09	3.34
							46	8.84	3.19	8.49	3.24	9.03	3.29	9.33	3.31	9.64	3.33	10.32	3.38	11.06	3.42
2500	2500	2500	2500	3500	13500	135%	10	11.24	1.99	11.69	2.04	12.13	2.08	12.36	2.10	12.59	2.12	13.05	2.16	13.52	2.21
							12	11.05	2.05	11.49	2.09	11.94	2.13	12.17	2.15	12.40	2.17	12.86	2.22	13.33	2.26
							14	10.85	2.10	11.30	2.14	11.75	2.19	11.97	2.21	12.20	2.23	12.67	2.27	13.14	2.32
							16	10.66	2.16	11.10	2.20	11.55	2.24	11.78	2.26	12.01	2.29	12.48	2.33	12.95	2.37
							18	10.47	2.21	10.91	2.26	11.36	2.30	11.59	2.32	11.82	2.34	12.29	2.39	12.76	2.43
							20	10.27	2.27	10.72	2.31	11.17	2.36	11.40	2.38	11.63	2.40	12.10	2.45	12.57	2.49
							21	10.18	2.30	10.62	2.34	11.08	2.39	11.30	2.41	11.54	2.43	12.00	2.47	12.47	2.52
							23	9.98	2.36	10.43	2.40	10.88	2.45	11.11	2.47	11.35	2.49	11.81	2.53	12.29	2.58
							25	9.79	2.42	10.24	2.46	10.69	2.51	10.92	2.53	11.16	2.55	11.62	2.60	12.10	2.64
							27	9.60	2.48	10.05	2.52	10.50	2.57	10.73	2.59	10.97	2.61	11.44	2.66	11.91	2.70
							29	9.41	2.54	9.86	2.58	10.32	2.63	10.55	2.65	10.78	2.68	11.25	2.72	11.72	2.77
							31	9.22	2.60	9.67	2.65	10.13	2.69	10.36	2.72	10.59	2.74	11.06	2.78	11.54	2.83
							33	9.03	2.67	9.48	2.71	9.94	2.76	10.17	2.78	10.40	2.80	10.87	2.85	11.35	2.89
							35	8.84	2.73	9.29	2.78	9.75	2.82	10.00	2.84	10.22	2.87	10.69	2.92	11.17	2.96
							37	8.65	2.80	9.10	2.84	9.56	2.89	9.79	2.91	10.03	2.94	10.50	2.98	10.98	3.03
							39	8.46	2.86	8.92	2.91	9.38	2.96	9.61	2.98	9.84	3.00	10.32	3.05	10.80	3.10
							42	8.18	2.97	8.63	3.01	9.10	3.06	9.33	3.08	9.56	3.11	10.04	3.15	10.52	3.20
							44	7.99	3.03	8.45	3.08	8.91	3.13	9.14	3.15	9.38	3.18	9.86	3.22	10.34	3.27
							46	7.80	3.11	8.26	3.15	8.73	3.20	8.96	3.22	9.20	3.25	9.67	3.30	10.16	3.34
2500	2500	2500	2500	5000	15000	150%	10	11.24	1.97	11.69	2.01	12.13	2.06	12.36	2.08	12.59	2.10	13.05	2.14	13.52	2.18
							12	11.05	2.02	11.49	2.07	11.94	2.11	12.17	2.13	12.40	2.15	12.86	2.19	13.33	2.24
							14	10.85	2.08	11.30	2.12	11.75	2.16	11.97	2.18	12.20	2.21	12.67	2.25	13.14	2.29
							16	10.66	2.13	11.10	2.18	11.55	2.22	11.78	2.24	12.01	2.26	12.48	2.30	12.95	2.35
							18	10.47	2.19	10.91	2.23	11.36	2.27	11.59	2.30	11.82	2.32	12.29	2.36	12.76	2.40
							20	10.27	2.25	10.72	2.29	11.17	2.33	11.40	2.35	11.63	2.38	12.10	2.42	12.57	2.46
							21	10.18	2.27	10.62	2.32	11.08	2.36	11.30	2.38	11.54	2.40	12.00	2.45	12.47	2.49
							23	9.98	2.33	10.43	2.38	10.88	2.42	11.11	2.44	11.35	2.46	11.81	2.51	12.29	2.55
							25	9.79	2.39	10.24	2.44	10.69	2.48	10.92	2.50	11.16	2.52	11.62	2.57	12.10	2.61
							27	9.60	2.45	10.05	2.50	10.50	2.54	10.73	2.56	10.97	2.58	11.44	2.63	11.91	2.67
							29	9.41	2.51	9.86	2.56	10.32	2.60	10.55	2.62	10.78	2.65	11.25	2.69	11.72	2.74
							31	9.22	2.57	9.67	2.62	10.13	2.66	10.36	2.69	10.59	2.71	11.06	2.75	11.54	2.80
							33	9.03	2.64	9.48	2.68	9.94	2.73	10.17	2.75	10.40	2.77	10.87	2.82	11.35	2.86
							35	8.84	2.70	9.29	2.75	9.75	2.79	10.00	2.81	10.22	2.84	10.69	2.88	11.17	2.93
							37	8.65	2.77	9.10	2.81	9.56	2.86	9.79	2.88	10.03	2.90	10.50	2.95	10.98	3.00
							39	8.46	2.83	8.92	2.88	9.38	2.93	9.61	2.95	9.84	2.97	10.32	3.02	10.80	3.06
							42	8.18	2.93	8.63	2.98	9.10	3.03	9.33	3.05	9.56	3.07	10.04	3.12	10.52	3.17
							44	7.99	3.00	8.45	3.05	8.91	3.10	9.14	3.12	9.38	3.14	9.86	3.19	10.34	3.24
							46	7.80	3.07	8.26	3.12	8.73	3.17	8.96	3.19	9.20	3.21	9.67	3.26	10.16	3.31

* All figures comply with EN14511

1. Cooling capacity is based on 27°CDB / 19°CWB (indoor temperature), 35°CDB (outdoor temperature).
2. Heating capacity is based on 20°CDB (indoor temperature), 7°CDB/6°CWB (outdoor temperature).
3. Capacities are based on the following conditions : - Corresponding refrigerant piping length : 5m / - Level difference : 0m
4. The total ability of connected a indoor unit is up to 17.3kW
5. It is impossible to connect the indoor unit for one room only.
6. This data is reference data for temperature capacity trend.

1) Cooling

COOLING

Combination (Capacity Index)					Combination (Total)	Combination (%)	Outdoor Temperature (°C, DB)	Indoor Temperature(°C, WB)													
								14		16		18		19		20		22		24	
								TC(kW)	PI(kW)	TC(kW)	PI(kW)	TC(kW)	PI(kW)	TC(kW)	PI(kW)	TC(kW)	PI(kW)	TC(kW)	PI(kW)	TC(kW)	PI(kW)
2500	2500	2500	2500	6800	16800	168%	10	11.24	2.06	11.69	2.10	12.13	2.14	12.36	2.17	12.59	2.19	13.05	2.23	13.52	2.27
							12	11.05	2.11	11.49	2.15	11.94	2.20	12.17	2.22	12.40	2.24	12.86	2.29	13.33	2.33
							14	10.85	2.17	11.30	2.21	11.75	2.26	11.97	2.28	12.20	2.30	12.67	2.34	13.14	2.39
							16	10.66	2.22	11.10	2.27	11.55	2.31	11.78	2.34	12.01	2.36	12.48	2.40	12.95	2.45
							18	10.47	2.28	10.91	2.33	11.36	2.37	11.59	2.39	11.82	2.42	12.29	2.46	12.76	2.51
							20	10.27	2.34	10.72	2.39	11.17	2.43	11.40	2.45	11.63	2.48	12.10	2.52	12.57	2.57
							21	10.18	2.37	10.62	2.42	11.08	2.46	11.30	2.48	11.54	2.51	12.00	2.55	12.47	2.60
							23	9.98	2.43	10.43	2.48	10.88	2.52	11.11	2.55	11.35	2.57	11.81	2.61	12.29	2.66
							25	9.79	2.49	10.24	2.54	10.69	2.59	10.92	2.61	11.16	2.63	11.62	2.68	12.10	2.72
							27	9.60	2.56	10.05	2.60	10.50	2.65	10.73	2.67	10.97	2.70	11.44	2.74	11.91	2.79
							29	9.41	2.62	9.86	2.67	10.32	2.71	10.55	2.74	10.78	2.76	11.25	2.81	11.72	2.85
							31	9.22	2.68	9.67	2.73	10.13	2.78	10.36	2.80	10.59	2.83	11.06	2.87	11.54	2.92
							33	9.03	2.75	9.48	2.80	9.94	2.85	10.17	2.87	10.40	2.89	10.87	2.94	11.35	2.99
							35	8.84	2.82	9.29	2.87	9.75	2.91	10.00	2.93	10.22	2.96	10.69	3.01	11.17	3.06
							37	8.65	2.89	9.10	2.93	9.56	2.98	9.79	3.00	10.03	3.03	10.50	3.08	10.98	3.12
							39	8.46	2.95	8.92	3.00	9.38	3.05	9.61	3.07	9.84	3.10	10.32	3.15	10.80	3.19
							42	8.18	3.06	8.63	3.11	9.10	3.16	9.33	3.18	9.56	3.21	10.04	3.25	10.52	3.30
							44	7.99	3.13	8.45	3.18	8.91	3.23	9.14	3.25	9.38	3.28	9.86	3.33	10.34	3.37
							46	7.80	3.20	8.26	3.25	8.73	3.30	8.96	3.33	9.20	3.35	9.67	3.40	10.16	3.45
2500	2500	2500	3500	3500	14500	145%	10	11.24	1.96	11.69	2.01	12.13	2.05	12.36	2.07	12.59	2.09	13.05	2.13	13.52	2.17
							12	11.05	2.02	11.49	2.06	11.94	2.10	12.17	2.12	12.40	2.14	12.86	2.19	13.33	2.23
							14	10.85	2.07	11.30	2.11	11.75	2.16	11.97	2.18	12.20	2.20	12.67	2.24	13.14	2.28
							16	10.66	2.13	11.10	2.17	11.55	2.21	11.78	2.23	12.01	2.25	12.48	2.30	12.95	2.34
							18	10.47	2.18	10.91	2.22	11.36	2.27	11.59	2.29	11.82	2.31	12.29	2.35	12.76	2.40
							20	10.27	2.24	10.72	2.28	11.17	2.32	11.40	2.35	11.63	2.37	12.10	2.41	12.57	2.45
							21	10.18	2.27	10.62	2.31	11.08	2.35	11.30	2.37	11.54	2.40	12.00	2.44	12.47	2.48
							23	9.98	2.32	10.43	2.37	10.88	2.41	11.11	2.43	11.35	2.46	11.81	2.50	12.29	2.54
							25	9.79	2.38	10.24	2.43	10.69	2.47	10.92	2.49	11.16	2.51	11.62	2.56	12.10	2.60
							27	9.60	2.44	10.05	2.49	10.50	2.53	10.73	2.55	10.97	2.58	11.44	2.62	11.91	2.66
							29	9.41	2.50	9.86	2.55	10.32	2.59	10.55	2.62	10.78	2.64	11.25	2.68	11.72	2.73
							31	9.22	2.57	9.67	2.61	10.13	2.66	10.36	2.68	10.59	2.70	11.06	2.75	11.54	2.79
							33	9.03	2.63	9.48	2.67	9.94	2.72	10.17	2.74	10.40	2.76	10.87	2.81	11.35	2.85
							35	8.84	2.69	9.29	2.74	9.75	2.78	10.00	2.80	10.22	2.83	10.69	2.87	11.17	2.92
							37	8.65	2.76	9.10	2.80	9.56	2.85	9.79	2.87	10.03	2.89	10.50	2.94	10.98	2.99
							39	8.46	2.82	8.92	2.87	9.38	2.92	9.61	2.94	9.84	2.96	10.32	3.01	10.80	3.05
							42	8.18	2.92	8.63	2.97	9.10	3.02	9.33	3.04	9.56	3.06	10.04	3.11	10.52	3.16
							44	7.99	2.99	8.45	3.04	8.91	3.09	9.14	3.11	9.38	3.13	9.86	3.18	10.34	3.23
							46	7.80	3.06	8.26	3.11	8.73	3.16	8.96	3.18	9.20	3.20	9.67	3.25	10.16	3.30
2500	2500	2500	3500	5000	16000	160%	10	11.24	2.01	11.69	2.05	12.13	2.09	12.36	2.11	12.59	2.14	13.05	2.18	13.52	2.22
							12	11.05	2.06	11.49	2.10	11.94	2.15	12.17	2.17	12.40	2.19	12.86	2.23	13.33	2.28
							14	10.85	2.12	11.30	2.16	11.75	2.20	11.97	2.22	12.20	2.25	12.67	2.29	13.14	2.33
							16	10.66	2.17	11.10	2.21	11.55	2.26	11.78	2.28	12.01	2.30	12.48	2.35	12.95	2.39
							18	10.47	2.23	10.91	2.27	11.36	2.32	11.59	2.34	11.82	2.36	12.29	2.40	12.76	2.45
							20	10.27	2.29	10.72	2.33	11.17	2.37	11.40	2.40	11.63	2.42	12.10	2.46	12.57	2.51
							21	10.18	2.31	10.62	2.36	11.08	2.40	11.30	2.43	11.54	2.45	12.00	2.49	12.47	2.54
							23	9.98	2.37	10.43	2.42	10.88	2.46	11.11	2.49	11.35	2.51	11.81	2.55	12.29	2.60
							25	9.79	2.43	10.24	2.48	10.69	2.52	10.92	2.55	11.16	2.57	11.62	2.61	12.10	2.66
							27	9.60	2.50	10.05	2.54	10.50	2.59	10.73	2.61	10.97	2.63	11.44	2.68	11.91	2.72
							29	9.41	2.56	9.86	2.60	10.32	2.65	10.55	2.67	10.78	2.69	11.25	2.74	11.72	2.79
							31	9.22	2.62	9.67	2.67	10.13	2.71	10.36	2.74	10.59	2.76	11.06	2.80	11.54	2.85
							33	9.03	2.69	9.48	2.73	9.94	2.78	10.17	2.80	10.40	2.82	10.87	2.87	11.35	2.92
							35	8.84	2.75	9.29	2.80	9.75	2.84	10.00	2.86	10.22	2.89	10.69	2.94	11.17	2.98
							37	8.65	2.82	9.10	2.86	9.56	2.91	9.79	2.93	10.03	2.96	10.50	3.00	10.98	3.05
							39	8.46	2.88	8.92	2.93	9.38	2.98	9.61	3.00	9.84	3.02	10.32	3.07	10.80	3.12
							42	8.18	2.99	8.63	3.03	9.10	3.08	9.33	3.10	9.56	3.13	10.04	3.18	10.52	3.22
							44	7.99	3.06	8.45	3.10	8.91	3.15	9.14	3.18	9.38	3.20	9.86	3.25	10.34	3.29
							46	7.80	3.13	8.26	3.17	8.73	3.22	8.96	3.25	9.20	3.27	9.67	3.32	10.16	3.37
2500	2500	3500	3500	3500	15500	155%	10	11.24	2.00	11.69	2.04	12.13	2.08	12.36	2.11	12.59	2.13	13.05	2.17	13.52	2.21
							12	11.05	2.05	11.49	2.10	11.94	2.14	12.17	2.16	12.40	2.18	12.86	2.22	13.33	2.27
							14	10.85	2.11	11.30	2.15	11.75	2.19	11.97	2.22	12.20	2.24	12.67	2.28	13.14	2.32
							16	10.66	2.16	11.10	2.21	11.55	2.25	11.78	2.27	12.01	2.29	12.48	2.34	12.95	2.38
							18	10.47	2.22	10.91	2.26	11.36	2.31	11.59	2.33	11.82	2.35	12.29	2.39	12.76	2.44
							20	10.27	2.28	10.72	2.32	11.17	2.37	11.40	2.39	11.63	2.41	12.10	2.45	12.57	2.50
							21	10.18	2.31	10.62	2.35	11.08	2.39	11.30	2.42	11.54	2.44	12.00	2.48	12.47	2.53
							23	9.98	2.37	10.43	2.41	10.88	2.45	11.11	2.48	11.35	2.50	11.81	2.54	12.29	2.59
							25	9.79	2.43	10.24	2.47	10.69	2.52	10.92	2.54	11.16	2.56	11.62	2.60	12.10	2.65
							27	9.60	2.49	10.05	2.53	10.50	2.58	10.73	2.60	10.97	2.62	11.44	2.67	11.91	2.71
							29	9.41	2.55	9.86	2.59	10.32	2.64	10.55	2.66	10.78	2.68	11.25	2.73	11.72	2.78
							31	9.22	2.61	9.67	2.66	10.13	2.70	10.36	2.73	10.59	2.75	11.06	2.79	11.54	2.84
							33	9.03	2.68	9.48	2.72	9.94	2.77	10.17	2.79	10.40	2.81	10.87	2.86	11.35	2.91
							35	8.84	2.74	9.29	2.79	9.75	2.83	10.00	2.85	10.22	2.88	10.69	2.93	11.17	2.97
							37	8.65	2.81	9.10	2.85	9.56	2.90	9.79	2.92	10.03	2.95	10.50	2.99	10.98	3.04
							39	8.46	2.87	8.92	2.92	9.38	2.97	9.61	2.99	9.84	3.01	10.32	3.06	10.80	3.11
							42	8.18	2.98	8.63	3.02	9.10	3.07	9.33	3.09	9.56	3.12	10.04	3.16	10.52	3.21
							44	7.99	3.05	8.45	3.09	8.91	3.14	9.14	3.16	9.38	3.19	9.86	3.24	10.34	3.28
							46	7.80	3.12	8.26	3.16	8.73	3.21	8.96	3.24	9.20	3.26	9.67	3.31	10.16	3.35

* All figures comply with EN14511

1. Cooling capacity is based on 27°CDB / 19°CWB (indoor temperature), 35°CDB (outdoor temperature).
2. Heating capacity is based on 20°CDB (indoor temperature), 7°CDB/6°CWB (outdoor temperature).
3. Capacities are based on the following conditions : - Corresponding refrigerant piping length : 5m / - Level difference : 0m
4. The total ability of connected a indoor unit is up to 17.3kW
5. It is impossible to connect the indoor unit for one room only.
6. This data is reference data for temperature capacity trend.

7 AJ100FCJ5EH

1) Cooling

	Combination (Capacity Index)					Combination (Total)	Combination (%)	Outdoor Temperature (°C, DB)	Indoor Temperature(°C, WB)											
									14		16		18		19		20		22		24	
									TC(kW)	PI(kW)	TC(kW)	PI(kW)	TC(kW)	PI(kW)	TC(kW)	PI(kW)	TC(kW)	PI(kW)	TC(kW)	PI(kW)	TC(kW)	PI(kW)
COOLING	2500	2500	3500	3500	5000	17000	170%	10	11.24	2.05	11.69	2.09	12.13	2.14	12.36	2.16	12.59	2.18	13.05	2.22	13.52	2.27
								12	11.05	2.10	11.49	2.15	11.94	2.19	12.17	2.21	12.40	2.24	12.86	2.28	13.33	2.32
								14	10.85	2.16	11.30	2.20	11.75	2.25	11.97	2.27	12.20	2.29	12.67	2.34	13.14	2.38
								16	10.66	2.22	11.10	2.26	11.55	2.31	11.78	2.33	12.01	2.35	12.48	2.39	12.95	2.44
								18	10.47	2.27	10.91	2.32	11.36	2.36	11.59	2.39	11.82	2.41	12.29	2.45	12.76	2.50
								20	10.27	2.33	10.72	2.38	11.17	2.42	11.40	2.45	11.63	2.47	12.10	2.51	12.57	2.56
								21	10.18	2.36	10.62	2.41	11.08	2.45	11.30	2.48	11.54	2.50	12.00	2.54	12.47	2.59
								23	9.98	2.42	10.43	2.47	10.88	2.51	11.11	2.54	11.35	2.56	11.81	2.61	12.29	2.65
								25	9.79	2.49	10.24	2.53	10.69	2.58	10.92	2.60	11.16	2.62	11.62	2.67	12.10	2.71
								27	9.60	2.55	10.05	2.59	10.50	2.64	10.73	2.66	10.97	2.69	11.44	2.73	11.91	2.78
								29	9.41	2.61	9.86	2.66	10.32	2.70	10.55	2.73	10.78	2.75	11.25	2.80	11.72	2.84
								31	9.22	2.68	9.67	2.72	10.13	2.77	10.36	2.79	10.59	2.82	11.06	2.86	11.54	2.91
								33	9.03	2.74	9.48	2.79	9.94	2.84	10.17	2.86	10.40	2.88	10.87	2.93	11.35	2.98
								35	8.84	2.81	9.29	2.86	9.75	2.90	10.00	2.92	10.22	2.95	10.69	3.00	11.17	3.04
								37	8.65	2.88	9.10	2.92	9.56	2.97	9.79	2.99	10.03	3.02	10.50	3.07	10.98	3.11
								39	8.46	2.94	8.92	2.99	9.38	3.04	9.61	3.06	9.84	3.09	10.32	3.14	10.80	3.18
								42	8.18	3.05	8.63	3.10	9.10	3.15	9.33	3.17	9.56	3.19	10.04	3.24	10.52	3.29
								44	7.99	3.12	8.45	3.17	8.91	3.22	9.14	3.24	9.38	3.27	9.86	3.31	10.34	3.36
								46	7.80	3.19	8.26	3.24	8.73	3.29	8.96	3.31	9.20	3.34	9.67	3.39	10.16	3.44
	2500	3500	3500	3500	3500	16500	165%	10	11.24	2.04	11.69	2.09	12.13	2.13	12.36	2.15	12.59	2.17	13.05	2.22	13.52	2.26
								12	11.05	2.10	11.49	2.14	11.94	2.18	12.17	2.21	12.40	2.23	12.86	2.27	13.33	2.32
								14	10.85	2.15	11.30	2.20	11.75	2.24	11.97	2.26	12.20	2.28	12.67	2.33	13.14	2.37
								16	10.66	2.21	11.10	2.25	11.55	2.30	11.78	2.32	12.01	2.34	12.48	2.39	12.95	2.43
								18	10.47	2.27	10.91	2.31	11.36	2.36	11.59	2.38	11.82	2.40	12.29	2.45	12.76	2.49
								20	10.27	2.33	10.72	2.37	11.17	2.42	11.40	2.44	11.63	2.46	12.10	2.51	12.57	2.55
								21	10.18	2.36	10.62	2.40	11.08	2.45	11.30	2.47	11.54	2.49	12.00	2.54	12.47	2.58
								23	9.98	2.42	10.43	2.46	10.88	2.51	11.11	2.53	11.35	2.55	11.81	2.60	12.29	2.64
								25	9.79	2.48	10.24	2.52	10.69	2.57	10.92	2.59	11.16	2.61	11.62	2.66	12.10	2.71
								27	9.60	2.54	10.05	2.58	10.50	2.63	10.73	2.65	10.97	2.68	11.44	2.72	11.91	2.77
								29	9.41	2.60	9.86	2.65	10.32	2.69	10.55	2.72	10.78	2.74	11.25	2.79	11.72	2.83
								31	9.22	2.67	9.67	2.71	10.13	2.76	10.36	2.78	10.59	2.81	11.06	2.85	11.54	2.90
								33	9.03	2.73	9.48	2.78	9.94	2.83	10.17	2.85	10.40	2.87	10.87	2.92	11.35	2.97
								35	8.84	2.80	9.29	2.85	9.75	2.89	10.00	2.91	10.22	2.94	10.69	2.99	11.17	3.03
								37	8.65	2.87	9.10	2.91	9.56	2.96	9.79	2.98	10.03	3.01	10.50	3.06	10.98	3.10
								39	8.46	2.93	8.92	2.98	9.38	3.03	9.61	3.05	9.84	3.08	10.32	3.13	10.80	3.17
								42	8.18	3.04	8.63	3.09	9.10	3.14	9.33	3.16	9.56	3.18	10.04	3.23	10.52	3.28
								44	7.99	3.11	8.45	3.16	8.91	3.21	9.14	3.23	9.38	3.26	9.86	3.30	10.34	3.35
								46	7.80	3.18	8.26	3.23	8.73	3.28	8.96	3.30	9.20	3.33	9.67	3.38	10.16	3.43

* All figures comply with EN14511

1. Cooling capacity is based on 27°CDB / 19°CWB (indoor temperature), 35°CDB (outdoor temperature).
2. Heating capacity is based on 20°CDB (indoor temperature), 7°CDB/6°CWB (outdoor temperature).
3. Capacities are based on the following conditions : - Corresponding refrigerant piping length : 5m / - Level difference : 0m
4. The total ability of connected a indoor unit is up to 17.3kW
5. It is impossible to connect the indoor unit for one room only.
6. This data is reference data for temperature capacity trend.

2) Heating

HEATING

Combination (Capacity Index)					Combination (Total)	Combination (%)	Outdoor Temperature (°C, DB)	Indoor Temperature(°C, WB)													
								14		16		18		20		21		22		24	
								TC(kW)	PI(kW)	TC(kW)	PI(kW)	TC(kW)	PI(kW)	TC(kW)	PI(kW)	TC(kW)	PI(kW)	TC(kW)	PI(kW)	TC(kW)	PI(kW)
2000					2000	20%	-15	1.26	0.72	1.22	0.73	1.18	0.74	1.17	0.74	1.15	0.74	1.13	0.75	1.11	0.76
							-10	1.51	0.75	1.47	0.76	1.43	0.77	1.41	0.78	1.40	0.78	1.37	0.79	1.34	0.80
							-5	1.76	0.79	1.71	0.80	1.67	0.81	1.66	0.82	1.64	0.82	1.61	0.83	1.58	0.84
							0	2.01	0.83	1.96	0.84	1.92	0.85	1.90	0.86	1.88	0.86	1.85	0.87	1.82	0.88
							2	2.11	0.84	2.06	0.85	2.02	0.87	2.00	0.87	1.98	0.88	1.95	0.89	1.92	0.89
							7	2.31	0.87	2.26	0.88	2.21	0.90	2.20	0.90	2.17	0.91	2.14	0.92	2.11	0.92
							10	2.51	0.90	2.46	0.91	2.41	0.93	2.39	0.93	2.37	0.94	2.33	0.95	2.30	0.96
							15	2.76	0.94	2.71	0.95	2.66	0.96	2.64	0.97	2.61	0.97	2.57	0.99	2.54	0.99
2500					2500	25%	-15	1.83	0.85	1.77	0.86	1.72	0.87	1.70	0.88	1.68	0.88	1.64	0.89	1.61	0.90
							-10	2.19	0.90	2.13	0.91	2.08	0.92	2.05	0.93	2.03	0.93	1.99	0.94	1.95	0.95
							-5	2.56	0.94	2.49	0.95	2.44	0.97	2.41	0.97	2.38	0.98	2.34	0.99	2.30	1.00
							0	2.92	0.98	2.85	1.00	2.79	1.01	2.76	1.02	2.74	1.02	2.69	1.03	2.65	1.04
							2	3.07	1.00	3.00	1.02	2.94	1.03	2.91	1.04	2.88	1.04	2.83	1.05	2.79	1.06
							7	3.36	1.04	3.29	1.05	3.22	1.06	3.20	1.07	3.16	1.08	3.11	1.09	3.07	1.10
							10	3.65	1.07	3.58	1.09	3.51	1.10	3.48	1.11	3.45	1.11	3.39	1.13	3.34	1.14
							15	4.02	1.11	3.94	1.13	3.87	1.14	3.83	1.15	3.80	1.16	3.74	1.17	3.69	1.18
3500					3500	35%	-15	2.29	1.02	2.22	1.03	2.15	1.05	2.13	1.05	2.10	1.06	2.05	1.07	2.01	1.08
							-10	2.74	1.07	2.67	1.09	2.60	1.10	2.57	1.11	2.54	1.11	2.49	1.12	2.44	1.13
							-5	3.20	1.12	3.12	1.14	3.04	1.16	3.01	1.16	2.98	1.17	2.92	1.18	2.88	1.19
							0	3.65	1.18	3.57	1.19	3.49	1.21	3.46	1.22	3.42	1.22	3.36	1.24	3.31	1.25
							2	3.83	1.20	3.75	1.21	3.67	1.23	3.63	1.24	3.60	1.25	3.54	1.26	3.48	1.27
							7	4.20	1.24	4.11	1.26	4.03	1.27	4.00	1.28	3.95	1.29	3.89	1.30	3.83	1.32
							10	4.56	1.28	4.47	1.30	4.38	1.32	4.35	1.32	4.31	1.33	4.24	1.35	4.18	1.36
							15	5.02	1.33	4.92	1.35	4.83	1.37	4.79	1.38	4.75	1.39	4.68	1.40	4.62	1.41
5000					5000	50%	-15	3.43	1.43	3.33	1.45	3.23	1.47	3.19	1.48	3.15	1.49	3.08	1.50	3.02	1.51
							-10	4.11	1.51	4.00	1.53	3.90	1.55	3.85	1.56	3.81	1.57	3.73	1.58	3.67	1.59
							-5	4.80	1.58	4.67	1.60	4.57	1.62	4.52	1.63	4.47	1.64	4.39	1.66	4.31	1.68
							0	5.48	1.65	5.35	1.68	5.24	1.70	5.18	1.71	5.13	1.72	5.04	1.74	4.97	1.75
							2	5.75	1.68	5.62	1.71	5.50	1.73	5.45	1.74	5.40	1.75	5.31	1.77	5.23	1.79
							7	6.30	1.74	6.16	1.77	6.04	1.79	6.00	1.80	5.93	1.81	5.83	1.83	5.75	1.85
							10	6.84	1.80	6.70	1.83	6.58	1.85	6.52	1.86	6.46	1.87	6.36	1.89	6.27	1.91
							15	7.53	1.87	7.38	1.90	7.25	1.93	7.19	1.94	7.13	1.95	7.02	1.97	6.92	1.99
6800					68000	68%	-15	4.47	1.87	4.33	1.90	4.20	1.92	4.14	1.93	4.09	1.94	4.00	1.96	3.92	1.98
							-10	5.35	1.97	5.20	2.00	5.07	2.02	5.01	2.03	4.95	2.04	4.85	2.06	4.77	2.08
							-5	6.23	2.06	6.08	2.09	5.94	2.12	5.87	2.13	5.81	2.15	5.70	2.17	5.61	2.19
							0	7.12	2.16	6.96	2.19	6.81	2.22	6.74	2.23	6.67	2.25	6.56	2.27	6.45	2.29
							2	7.47	2.20	7.31	2.23	7.15	2.26	7.08	2.27	7.02	2.29	6.90	2.31	6.79	2.33
							7	8.19	2.27	8.01	2.31	7.85	2.34	7.80	2.35	7.71	2.37	7.58	2.39	7.47	2.41
							10	8.90	2.35	8.72	2.39	8.55	2.42	8.47	2.43	8.40	2.45	8.27	2.47	8.15	2.50
							15	9.79	2.44	9.60	2.48	9.43	2.51	9.34	2.53	9.27	2.55	9.13	2.57	9.00	2.60
2000	2000				4000	40%	-15	2.52	0.99	2.44	1.01	2.37	1.02	2.34	1.03	2.31	1.03	2.26	1.04	2.21	1.05
							-10	3.02	1.05	2.93	1.06	2.86	1.08	2.82	1.08	2.79	1.09	2.74	1.10	2.69	1.11
							-5	3.52	1.10	3.43	1.11	3.35	1.13	3.31	1.14	3.28	1.14	3.22	1.15	3.16	1.16
							0	4.02	1.15	3.92	1.17	3.84	1.18	3.80	1.19	3.76	1.20	3.70	1.21	3.64	1.22
							2	4.22	1.17	4.12	1.19	4.04	1.20	4.00	1.21	3.96	1.22	3.89	1.23	3.83	1.24
							7	4.62	1.21	4.52	1.23	4.43	1.24	4.40	1.25	4.35	1.26	4.28	1.27	4.21	1.28
							10	5.02	1.25	4.92	1.27	4.82	1.29	4.78	1.29	4.74	1.30	4.66	1.32	4.60	1.33
							15	5.52	1.30	5.41	1.32	5.32	1.34	5.27	1.35	5.23	1.35	5.15	1.37	5.08	1.38
2000	2500				4500	45%	-15	3.15	1.21	3.05	1.23	2.96	1.24	2.92	1.25	2.89	1.26	2.82	1.27	2.77	1.28
							-10	3.77	1.27	3.67	1.29	3.57	1.31	3.53	1.32	3.49	1.32	3.42	1.34	3.36	1.35
							-5	4.40	1.33	4.29	1.35	4.19	1.37	4.14	1.38	4.10	1.39	4.02	1.40	3.96	1.41
							0	5.02	1.40	4.90	1.42	4.80	1.44	4.75	1.45	4.71	1.45	4.62	1.47	4.55	1.48
							2	5.27	1.42	5.15	1.44	5.05	1.46	5.00	1.47	4.95	1.48	4.86	1.49	4.79	1.51
							7	5.77	1.47	5.65	1.49	5.54	1.51	5.50	1.52	5.44	1.53	5.35	1.55	5.27	1.56
							10	6.27	1.52	6.15	1.54	6.03	1.56	5.98	1.57	5.92	1.58	5.83	1.60	5.75	1.61
							15	6.90	1.58	6.77	1.60	6.65	1.63	6.59	1.64	6.53	1.65	6.44	1.66	6.35	1.68
2000	3500				5500	55%	-15	3.55	1.35	3.44	1.37	3.34	1.39	3.29	1.40	3.25	1.41	3.18	1.42	3.12	1.43
							-10	4.25	1.42	4.13	1.44	4.03	1.46	3.98	1.47	3.94	1.48	3.86	1.49	3.79	1.51
							-5	4.95	1.49	4.83	1.51	4.72	1.53	4.67	1.54	4.62	1.55	4.53	1.57	4.46	1.58
							0	5.66	1.56	5.53	1.59	5.41	1.61	5.36	1.62	5.30	1.63	5.21	1.64	5.13	1.66
							2	5.94	1.59	5.81	1.61	5.69	1.64	5.63	1.65	5.58	1.65	5.48	1.67	5.40	1.69
							7	6.51	1.65	6.37	1.67	6.24	1.69	6.20	1.70	6.13	1.71	6.03	1.73	5.94	1.75
							10	7.07	1.70	6.93	1.73	6.80	1.75	6.74	1.76	6.68	1.77	6.57	1.79	6.48	1.81
							15	7.78	1.77	7.63	1.79	7.49	1.82	7.43	1.83	7.37	1.84	7.25	1.86	7.15	1.88
2000	5000				7000	70%	-15	4.69	1.78	4.55	1.81	4.42	1.83	4.36	1.84	4.30	1.85	4.20	1.87	4.12	1.88
							-10	5.62	1.87	5.47	1.90	5.33	1.93	5.26	1.94	5.21	1.95	5.10	1.97	5.01	1.98
							-5	6.55	1.97	6.39	2.00	6.24	2.02	6.17	2.03	6.11	2.05	5.99	2.07	5.90	2.08
							0	7.48	2.06	7.31	2.09	7.16	2.12	7.08	2.13	7.02	2.14	6.89	2.16	6.79	2.18
							2	7.86	2.09	7.68	2.13	7.52	2.15	7.45	2.17	7.38	2.18	7.25	2.20	7.14	2.22
							7	8.61	2.17	8.42	2.20	8.25	2.23	8.20	2.24	8.10	2.26	7.97	2.28	7.85	2.30
							10	9.35	2.24	9.16	2.27	8.99	2.30	8.91	2.32	8.83	2.33	8.69	2.36	8.57	2.38
							15	10.29	2.33	10.09	2.36	9.91	2.40	9.82	2.41	9.74	2.43	9.59	2.45	9.46	2.48

* All figures comply with EN14511

1. Cooling capacity is based on 27°CDB / 19°CWB (indoor temperature), 35°CDB (outdoor temperature).
2. Heating capacity is based on 20°CDB (indoor temperature), 7°CDB/6°CWB (outdoor temperature).
3. Capacities are based on the following conditions : - Corresponding refrigerant piping length : 5m / - Level difference : 0m
4. The total ability of connected a indoor unit is up to 17.3kW
5. It is impossible to connect the indoor unit for one room only.
6. This data is reference data for temperature capacity trend.

7 AJ100FCJ5EH

2) Heating

HEATING

Combination (Capacity Index)					Combination (Total)	Combination (%)	Outdoor Temperature (°C, DB)	Indoor Temperature(°C, WB)													
								14		16		18		20		21		22		24	
								TC(kW)	PI(kW)	TC(kW)	PI(kW)	TC(kW)	PI(kW)	TC(kW)	PI(kW)	TC(kW)	PI(kW)	TC(kW)	PI(kW)	TC(kW)	PI(kW)
2000	6800				8800	88%	-15	5.72	2.22	5.55	2.25	5.39	2.28	5.31	2.29	5.25	2.31	5.13	2.33	5.03	2.35
							-10	6.86	2.33	6.67	2.37	6.50	2.40	6.42	2.41	6.35	2.43	6.22	2.45	6.11	2.47
							-5	7.99	2.45	7.79	2.49	7.61	2.52	7.53	2.53	7.45	2.55	7.31	2.57	7.19	2.60
							0	9.13	2.56	8.92	2.60	8.73	2.64	8.64	2.65	8.56	2.67	8.41	2.70	8.28	2.72
							2	9.58	2.61	9.37	2.65	9.17	2.68	9.08	2.70	9.00	2.72	8.84	2.74	8.71	2.77
							7	10.49	2.70	10.27	2.74	10.07	2.78	10.00	2.79	9.88	2.81	9.72	2.84	9.58	2.87
							10	11.41	2.79	11.17	2.83	10.96	2.87	10.86	2.89	10.77	2.90	10.60	2.94	10.45	2.96
							15	12.55	2.90	12.31	2.95	12.08	2.99	11.98	3.00	11.88	3.02	11.70	3.05	11.54	3.08
2500	2500				5000	50%	-15	3.78	1.45	3.66	1.47	3.55	1.49	3.51	1.50	3.46	1.50	3.38	1.52	3.32	1.53
							-10	4.53	1.52	4.40	1.55	4.29	1.57	4.24	1.57	4.19	1.58	4.10	1.60	4.03	1.61
							-5	5.27	1.60	5.14	1.62	5.02	1.64	4.97	1.65	4.92	1.66	4.83	1.68	4.75	1.69
							0	6.02	1.67	5.89	1.70	5.76	1.72	5.70	1.73	5.65	1.74	5.55	1.76	5.46	1.77
							2	6.32	1.70	6.18	1.73	6.05	1.75	5.99	1.76	5.94	1.77	5.84	1.79	5.75	1.81
							7	6.93	1.76	6.78	1.79	6.64	1.81	6.60	1.82	6.52	1.83	6.42	1.85	6.32	1.87
							10	7.53	1.82	7.37	1.85	7.24	1.87	7.17	1.88	7.11	1.89	7.00	1.92	6.90	1.93
							15	8.28	1.89	8.12	1.92	7.98	1.95	7.91	1.96	7.84	1.97	7.72	1.99	7.62	2.01
2500	3500				6000	60%	-15	4.18	1.60	4.05	1.62	3.93	1.64	3.88	1.65	3.83	1.66	3.74	1.68	3.67	1.69
							-10	5.01	1.68	4.87	1.71	4.74	1.73	4.69	1.74	4.63	1.75	4.54	1.77	4.46	1.78
							-5	5.83	1.76	5.69	1.79	5.56	1.81	5.50	1.83	5.44	1.84	5.34	1.85	5.25	1.87
							0	6.66	1.85	6.51	1.87	6.37	1.90	6.31	1.91	6.25	1.92	6.14	1.94	6.04	1.96
							2	7.00	1.88	6.84	1.91	6.70	1.93	6.63	1.95	6.57	1.96	6.46	1.98	6.36	1.99
							7	7.66	1.94	7.50	1.97	7.35	2.00	7.30	2.01	7.22	2.02	7.10	2.05	6.99	2.07
							10	8.33	2.01	8.16	2.04	8.00	2.07	7.93	2.08	7.86	2.09	7.74	2.12	7.63	2.14
							15	9.16	2.09	8.98	2.12	8.82	2.15	8.75	2.16	8.67	2.18	8.54	2.20	8.42	2.22
2500	5000				7500	75%	-15	5.32	2.06	5.16	2.09	5.01	2.12	4.94	2.13	4.88	2.14	4.77	2.16	4.68	2.18
							-10	6.38	2.17	6.20	2.20	6.04	2.23	5.97	2.24	5.90	2.25	5.78	2.28	5.68	2.29
							-5	7.43	2.27	7.25	2.31	7.08	2.34	7.00	2.35	6.93	2.37	6.80	2.39	6.69	2.41
							0	8.49	2.38	8.29	2.42	8.12	2.45	8.03	2.46	7.96	2.48	7.82	2.50	7.70	2.52
							2	8.91	2.42	8.71	2.46	8.53	2.49	8.45	2.51	8.37	2.52	8.22	2.55	8.10	2.57
							7	9.76	2.51	9.55	2.54	9.36	2.58	9.30	2.59	9.19	2.61	9.04	2.64	8.91	2.66
							10	10.61	2.59	10.39	2.63	10.20	2.66	10.10	2.68	10.02	2.70	9.86	2.73	9.72	2.75
							15	11.67	2.69	11.44	2.73	11.24	2.77	11.14	2.79	11.05	2.81	10.88	2.84	10.73	2.86
2500	6800				9300	93%	-15	6.07	2.32	5.88	2.36	5.71	2.39	5.63	2.40	5.56	2.41	5.44	2.44	5.33	2.46
							-10	7.27	2.44	7.07	2.48	6.89	2.51	6.81	2.53	6.73	2.54	6.59	2.57	6.48	2.59
							-5	8.47	2.56	8.26	2.60	8.07	2.64	7.98	2.65	7.90	2.67	7.75	2.69	7.62	2.72
							0	9.68	2.68	9.45	2.72	9.25	2.76	9.16	2.78	9.07	2.79	8.91	2.82	8.77	2.85
							2	10.16	2.73	9.93	2.77	9.72	2.81	9.63	2.83	9.54	2.84	9.37	2.87	9.23	2.90
							7	11.12	2.83	10.89	2.87	10.67	2.91	10.60	2.92	10.48	2.94	10.30	2.97	10.15	3.00
							10	12.09	2.92	11.84	2.96	11.62	3.00	11.52	3.02	11.42	3.04	11.24	3.07	11.08	3.10
							15	13.30	3.04	13.04	3.08	12.81	3.12	12.70	3.14	12.59	3.16	12.40	3.20	12.23	3.23
3500	3500				7000	70%	-15	4.58	1.74	4.44	1.77	4.31	1.79	4.25	1.80	4.20	1.81	4.10	1.83	4.02	1.84
							-10	5.49	1.83	5.33	1.86	5.20	1.88	5.14	1.89	5.08	1.91	4.97	1.92	4.89	1.94
							-5	6.39	1.92	6.23	1.95	6.09	1.98	6.02	1.99	5.96	2.00	5.85	2.02	5.75	2.04
							0	7.30	2.01	7.13	2.04	6.98	2.07	6.91	2.08	6.84	2.09	6.72	2.12	6.62	2.13
							2	7.67	2.05	7.49	2.08	7.34	2.11	7.27	2.12	7.20	2.13	7.07	2.15	6.97	2.17
							7	8.40	2.12	8.22	2.15	8.05	2.18	8.00	2.19	7.91	2.21	7.78	2.23	7.66	2.25
							10	9.12	2.19	8.94	2.22	8.77	2.25	8.69	2.27	8.62	2.28	8.48	2.30	8.36	2.33
							15	10.04	2.28	9.84	2.31	9.67	2.34	9.58	2.36	9.51	2.37	9.36	2.40	9.23	2.42
3500	5000				8500	85%	-15	5.72	2.17	5.55	2.20	5.39	2.23	5.31	2.24	5.25	2.26	5.13	2.28	5.03	2.30
							-10	6.86	2.28	6.67	2.32	6.50	2.35	6.42	2.36	6.35	2.38	6.22	2.40	6.11	2.42
							-5	7.99	2.40	7.79	2.43	7.61	2.46	7.53	2.48	7.45	2.49	7.31	2.52	7.19	2.54
							0	9.13	2.51	8.92	2.55	8.73	2.58	8.64	2.60	8.56	2.61	8.41	2.64	8.28	2.66
							2	9.58	2.55	9.37	2.59	9.17	2.63	9.08	2.64	9.00	2.66	8.84	2.68	8.71	2.71
							7	10.49	2.64	10.27	2.68	10.07	2.72	10.00	2.73	9.88	2.75	9.72	2.78	9.58	2.80
							10	11.41	2.73	11.17	2.77	10.96	2.81	10.86	2.83	10.77	2.84	10.60	2.87	10.45	2.90
							15	12.55	2.84	12.31	2.88	12.08	2.92	11.98	2.94	11.88	2.96	11.70	2.99	11.54	3.02
3500	6800				10300	103%	-15	6.07	2.33	5.88	2.36	5.71	2.39	5.63	2.41	5.56	2.42	5.44	2.45	5.33	2.46
							-10	7.27	2.45	7.07	2.49	6.89	2.52	6.81	2.54	6.73	2.55	6.59	2.57	6.48	2.60
							-5	8.47	2.57	8.26	2.61	8.07	2.65	7.98	2.66	7.90	2.68	7.75	2.70	7.62	2.73
							0	9.68	2.69	9.45	2.73	9.25	2.77	9.16	2.79	9.07	2.80	8.91	2.83	8.77	2.86
							2	10.16	2.74	9.93	2.78	9.72	2.82	9.63	2.84	9.54	2.85	9.37	2.88	9.23	2.91
							7	11.12	2.84	10.89	2.88	10.67	2.92	10.60	2.93	10.48	2.95	10.30	2.98	10.15	3.01
							10	12.09	2.93	11.84	2.97	11.62	3.01	11.52	3.03	11.42	3.05	11.24	3.08	11.08	3.11
							15	13.30	3.05	13.04	3.09	12.81	3.13	12.70	3.15	12.59	3.17	12.40	3.21	12.23	3.24
5000	5000				10000	100%	-15	6.07	2.32	5.88	2.36	5.71	2.39	5.63	2.40	5.56	2.41	5.44	2.44	5.33	2.46
							-10	7.27	2.44	7.07	2.48	6.89	2.51	6.81	2.53	6.73	2.54	6.59	2.57	6.48	2.59
							-5	8.47	2.56	8.26	2.60	8.07	2.64	7.98	2.65	7.90	2.67	7.75	2.69	7.62	2.72
							0	9.68	2.68	9.45	2.72	9.25	2.76	9.16	2.78	9.07	2.79	8.91	2.82	8.77	2.85
							2	10.16	2.73	9.93	2.77	9.72	2.81	9.63	2.83	9.54	2.84	9.37	2.87	9.23	2.90
							7	11.12	2.83	10.89	2.87	10.67	2.91	10.60	2.92	10.48	2.94	10.30	2.97	10.15	3.00
							10	12.09	2.92	11.84	2.96	11.62	3.00	11.52	3.02	11.42	3.04	11.24	3.07	11.08	3.10
							15	13.30	3.04	13.04	3.08	12.81	3.12	12.70	3.14	12.59	3.16	12.40	3.20	12.23	3.23

* All figures comply with EN14511

1. Cooling capacity is based on 27°CDB / 19°CWB (indoor temperature), 35°CDB (outdoor temperature).
2. Heating capacity is based on 20°CDB (indoor temperature), 7°CDB/6°CWB (outdoor temperature).
3. Capacities are based on the following conditions : - Corresponding refrigerant piping length : 5m / - Level difference : 0m
4. The total ability of connected a indoor unit is up to 17.3kW
5. It is impossible to connect the indoor unit for one room only.
6. This data is reference data for temperature capacity trend.

2) Heating

HEATING

Combination (Capacity Index)					Combination (Total)	Combination (%)	Outdoor Temperature (°C, DB)	Indoor Temperature(°C, WB)													
								14		16		18		20		21		22		24	
								TC(kW)	PI(kW)	TC(kW)	PI(kW)	TC(kW)	PI(kW)	TC(kW)	PI(kW)	TC(kW)	PI(kW)	TC(kW)	PI(kW)	TC(kW)	PI(kW)
5000	6800				11800	118%	-15	6.07	2.34	5.88	2.37	5.71	2.40	5.63	2.42	5.56	2.43	5.44	2.45	5.33	2.47
							-10	7.27	2.46	7.07	2.50	6.89	2.53	6.81	2.54	6.73	2.56	6.59	2.58	6.48	2.61
							-5	8.47	2.58	8.26	2.62	8.07	2.65	7.98	2.67	7.90	2.69	7.75	2.71	7.62	2.74
							0	9.68	2.70	9.45	2.74	9.25	2.78	9.16	2.80	9.07	2.81	8.91	2.84	8.77	2.87
							2	10.16	2.75	9.93	2.79	9.72	2.83	9.63	2.85	9.54	2.86	9.37	2.89	9.23	2.92
							7	11.12	2.84	10.89	2.89	10.67	2.93	10.60	2.94	10.48	2.96	10.30	2.99	10.15	3.02
							10	12.09	2.94	11.84	2.98	11.62	3.02	11.52	3.04	11.42	3.06	11.24	3.09	11.08	3.12
							15	13.30	3.06	13.04	3.10	12.81	3.15	12.70	3.17	12.59	3.18	12.40	3.22	12.23	3.25
6800	6800				13600	136%	-15	6.07	2.32	5.88	2.36	5.71	2.39	5.63	2.40	5.56	2.41	5.44	2.44	5.33	2.46
							-10	7.27	2.44	7.07	2.48	6.89	2.51	6.81	2.53	6.73	2.54	6.59	2.57	6.48	2.59
							-5	8.47	2.56	8.26	2.60	8.07	2.64	7.98	2.65	7.90	2.67	7.75	2.69	7.62	2.72
							0	9.68	2.68	9.45	2.72	9.25	2.76	9.16	2.78	9.07	2.79	8.91	2.82	8.77	2.85
							2	10.16	2.73	9.93	2.77	9.72	2.81	9.63	2.83	9.54	2.84	9.37	2.87	9.23	2.90
							7	11.12	2.83	10.89	2.87	10.67	2.91	10.60	2.92	10.48	2.94	10.30	2.97	10.15	3.00
							10	12.09	2.92	11.84	2.96	11.62	3.00	11.52	3.02	11.42	3.04	11.24	3.07	11.08	3.10
							15	13.30	3.04	13.04	3.08	12.81	3.12	12.70	3.14	12.59	3.16	12.40	3.20	12.23	3.23
2000	2000	2000			6000	60%	-15	3.78	1.37	3.66	1.39	3.55	1.41	3.51	1.41	3.46	1.42	3.38	1.44	3.32	1.45
							-10	4.53	1.44	4.40	1.46	4.29	1.48	4.24	1.49	4.19	1.50	4.10	1.51	4.03	1.52
							-5	5.27	1.51	5.14	1.53	5.02	1.55	4.97	1.56	4.92	1.57	4.83	1.59	4.75	1.60
							0	6.02	1.58	5.89	1.60	5.76	1.63	5.70	1.64	5.65	1.64	5.55	1.66	5.46	1.68
							2	6.32	1.61	6.18	1.63	6.05	1.65	5.99	1.66	5.94	1.67	5.84	1.69	5.75	1.71
							7	6.93	1.66	6.78	1.69	6.64	1.71	6.60	1.72	6.52	1.73	6.42	1.75	6.32	1.77
							10	7.53	1.72	7.37	1.75	7.24	1.77	7.17	1.78	7.11	1.79	7.00	1.81	6.90	1.83
							15	8.28	1.79	8.12	1.82	7.98	1.84	7.91	1.85	7.84	1.86	7.72	1.88	7.62	1.90
2000	2000	2500			6500	65%	-15	4.41	1.61	4.27	1.64	4.15	1.66	4.09	1.67	4.04	1.68	3.95	1.69	3.87	1.71
							-10	5.28	1.70	5.13	1.72	5.00	1.75	4.94	1.76	4.89	1.77	4.79	1.78	4.70	1.80
							-5	6.15	1.78	6.00	1.81	5.86	1.83	5.80	1.84	5.74	1.85	5.63	1.87	5.54	1.89
							0	7.03	1.87	6.87	1.89	6.72	1.92	6.65	1.93	6.59	1.94	6.47	1.96	6.37	1.98
							2	7.38	1.90	7.21	1.93	7.06	1.95	6.99	1.96	6.93	1.98	6.81	2.00	6.71	2.01
							7	8.08	1.96	7.91	1.99	7.75	2.02	7.70	2.03	7.61	2.04	7.49	2.07	7.38	2.09
							10	8.78	2.03	8.60	2.06	8.44	2.09	8.37	2.10	8.29	2.11	8.16	2.14	8.05	2.16
							15	9.66	2.11	9.48	2.14	9.30	2.17	9.22	2.19	9.15	2.20	9.01	2.22	8.88	2.24
2000	2000	3500			7500	75%	-15	4.81	1.76	4.66	1.78	4.52	1.81	4.46	1.82	4.41	1.83	4.31	1.84	4.22	1.86
							-10	5.76	1.85	5.60	1.88	5.46	1.90	5.39	1.91	5.33	1.92	5.22	1.94	5.13	1.96
							-5	6.71	1.94	6.54	1.97	6.39	2.00	6.32	2.01	6.26	2.02	6.14	2.04	6.04	2.06
							0	7.67	2.03	7.49	2.06	7.33	2.09	7.26	2.10	7.19	2.11	7.06	2.14	6.95	2.15
							2	8.05	2.07	7.87	2.10	7.71	2.13	7.63	2.14	7.56	2.15	7.43	2.17	7.32	2.19
							7	8.81	2.14	8.63	2.17	8.46	2.20	8.40	2.21	8.30	2.23	8.17	2.25	8.05	2.27
							10	9.58	2.21	9.39	2.24	9.21	2.27	9.13	2.29	9.05	2.30	8.90	2.33	8.78	2.35
							15	10.54	2.30	10.34	2.33	10.15	2.36	10.06	2.38	9.98	2.39	9.83	2.42	9.69	2.44
2000	2000	5000			9000	90%	-15	5.55	2.15	5.37	2.19	5.22	2.21	5.15	2.23	5.08	2.24	4.97	2.26	4.87	2.28
							-10	6.64	2.27	6.46	2.30	6.30	2.33	6.22	2.34	6.15	2.36	6.03	2.38	5.92	2.40
							-5	7.74	2.38	7.55	2.41	7.37	2.45	7.29	2.46	7.22	2.48	7.08	2.50	6.97	2.52
							0	8.85	2.49	8.64	2.53	8.46	2.56	8.37	2.58	8.29	2.59	8.14	2.62	8.02	2.64
							2	9.29	2.53	9.08	2.57	8.89	2.61	8.80	2.62	8.72	2.64	8.57	2.67	8.44	2.69
							7	10.17	2.62	9.95	2.66	9.75	2.70	9.69	2.71	9.58	2.73	9.42	2.76	9.28	2.78
							10	11.05	2.71	10.83	2.75	10.62	2.79	10.53	2.80	10.44	2.82	10.27	2.85	10.13	2.88
							15	12.16	2.82	11.92	2.86	11.71	2.90	11.61	2.92	11.51	2.94	11.34	2.97	11.18	3.00
2000	2000	6800			10800	108%	-15	5.64	2.17	5.47	2.20	5.31	2.23	5.24	2.24	5.17	2.26	5.06	2.28	4.96	2.30
							-10	6.76	2.28	6.57	2.32	6.41	2.35	6.33	2.36	6.26	2.38	6.13	2.40	6.02	2.42
							-5	7.88	2.40	7.68	2.43	7.50	2.46	7.42	2.48	7.35	2.49	7.21	2.52	7.09	2.54
							0	9.00	2.51	8.79	2.55	8.60	2.58	8.52	2.60	8.44	2.61	8.29	2.64	8.16	2.66
							2	9.45	2.55	9.24	2.59	9.04	2.63	8.96	2.64	8.87	2.66	8.72	2.68	8.59	2.71
							7	10.35	2.64	10.13	2.68	9.93	2.72	9.86	2.73	9.75	2.75	9.59	2.78	9.44	2.80
							10	11.25	2.73	11.02	2.77	10.81	2.81	10.71	2.83	10.62	2.84	10.45	2.87	10.30	2.90
							15	12.37	2.84	12.13	2.88	11.91	2.92	11.81	2.94	11.72	2.96	11.54	2.99	11.38	3.02
2000	2500	2500			7000	70%	-15	5.04	1.89	4.88	1.92	4.74	1.95	4.68	1.96	4.62	1.97	4.51	1.99	4.43	2.00
							-10	6.03	1.99	5.87	2.02	5.72	2.05	5.65	2.06	5.59	2.07	5.47	2.09	5.38	2.11
							-5	7.03	2.09	6.86	2.12	6.70	2.15	6.62	2.16	6.56	2.17	6.43	2.20	6.33	2.21
							0	8.03	2.19	7.85	2.22	7.68	2.25	7.60	2.26	7.53	2.28	7.40	2.30	7.28	2.32
							2	8.43	2.23	8.24	2.26	8.07	2.29	7.99	2.30	7.92	2.32	7.78	2.34	7.66	2.36
							7	9.23	2.30	9.04	2.34	8.86	2.37	8.80	2.38	8.70	2.40	8.55	2.42	8.43	2.45
							10	10.04	2.38	9.83	2.42	9.65	2.45	9.56	2.46	9.48	2.48	9.33	2.50	9.20	2.53
							15	11.04	2.48	10.83	2.51	10.63	2.55	10.54	2.56	10.46	2.58	10.30	2.61	10.15	2.63
2000	2500	3500			8000	80%	-15	5.44	2.00	5.27	2.03	5.12	2.06	5.05	2.07	4.98	2.08	4.87	2.10	4.78	2.12
							-10	6.51	2.11	6.33	2.14	6.17	2.17	6.10	2.18	6.03	2.19	5.91	2.21	5.80	2.23
							-5	7.59	2.21	7.40	2.25	7.23	2.27	7.15	2.29	7.08	2.30	6.95	2.32	6.83	2.35
							0	8.67	2.32	8.47	2.35	8.29	2.38	8.21	2.40	8.13	2.41	7.99	2.43	7.86	2.46
							2	9.10	2.36	8.90	2.39	8.71	2.42	8.63	2.44	8.55	2.45	8.40	2.48	8.27	2.50
							7	9.97	2.44	9.76	2.47	9.56	2.51	9.50	2.52	9.39	2.54	9.24	2.57	9.10	2.59
							10	10.84	2.52	10.62	2.56	10.41	2.59	10.32	2.61	10.23	2.62	10.07	2.65	9.93	2.68
							15	11.92	2.62	11.69	2.66	11.48	2.70	11.38	2.71	11.29	2.73	11.12	2.76	10.96	2.79

* All figures comply with EN14511

1. Cooling capacity is based on 27°CDB / 19°CWB (indoor temperature), 35°CDB (outdoor temperature).
2. Heating capacity is based on 20°CDB (indoor temperature), 7°CDB/6°CWB (outdoor temperature).
3. Capacities are based on the following conditions : - Corresponding refrigerant piping length : 5m / - Level difference : 0m
4. The total ability of connected a indoor unit is up to 17.3kW
5. It is impossible to connect the indoor unit for one room only.
6. This data is reference data for temperature capacity trend.

7 AJ100FCJ5EH

2) Heating

HEATING

Combination (Capacity Index)					Combination (Total)	Combination (%)	Outdoor Temperature (°C, DB)	Indoor Temperature(°C, WB)													
								14		16		18		20		21		22		24	
								TC(kW)	PI(kW)	TC(kW)	PI(kW)	TC(kW)	PI(kW)	TC(kW)	PI(kW)	TC(kW)	PI(kW)	TC(kW)	PI(kW)	TC(kW)	PI(kW)
2000	2500	5000			9500	95%	-15	5.60	2.12	5.43	2.15	5.27	2.18	5.20	2.19	5.14	2.21	5.02	2.23	4.92	2.25
							-10	6.71	2.23	6.53	2.27	6.36	2.30	6.29	2.31	6.21	2.32	6.09	2.35	5.98	2.37
							-5	7.82	2.34	7.63	2.38	7.45	2.41	7.37	2.42	7.29	2.44	7.16	2.46	7.04	2.48
							0	8.94	2.45	8.73	2.49	8.54	2.52	8.46	2.54	8.38	2.55	8.23	2.58	8.10	2.60
							2	9.38	2.50	9.17	2.53	8.98	2.57	8.89	2.58	8.81	2.60	8.66	2.63	8.53	2.65
							7	10.27	2.58	10.05	2.62	9.86	2.66	9.79	2.67	9.68	2.69	9.52	2.72	9.38	2.74
							10	11.17	2.67	10.94	2.71	10.73	2.75	10.64	2.76	10.54	2.78	10.38	2.81	10.23	2.84
							15	12.28	2.78	12.05	2.82	11.83	2.86	11.73	2.87	11.63	2.89	11.45	2.92	11.30	2.95
2000	2500	6800			11300	113%	-15	5.71	2.17	5.53	2.20	5.37	2.23	5.30	2.24	5.23	2.26	5.11	2.28	5.01	2.30
							-10	6.84	2.28	6.65	2.32	6.48	2.35	6.40	2.36	6.33	2.38	6.20	2.40	6.09	2.42
							-5	7.97	2.40	7.77	2.43	7.59	2.46	7.51	2.48	7.43	2.49	7.29	2.52	7.17	2.54
							0	9.10	2.51	8.89	2.55	8.70	2.58	8.61	2.60	8.53	2.61	8.38	2.64	8.25	2.66
							2	9.55	2.55	9.34	2.59	9.15	2.63	9.06	2.64	8.97	2.66	8.82	2.68	8.68	2.71
							7	10.46	2.64	10.24	2.68	10.04	2.72	9.97	2.73	9.85	2.75	9.69	2.78	9.55	2.80
							10	11.37	2.73	11.14	2.77	10.93	2.81	10.83	2.83	10.74	2.84	10.57	2.87	10.42	2.90
							15	12.51	2.84	12.27	2.88	12.05	2.92	11.94	2.94	11.85	2.96	11.66	2.99	11.50	3.02
2000	3500	3500			9000	90%	-15	5.54	2.15	5.36	2.18	5.21	2.21	5.14	2.22	5.07	2.23	4.96	2.25	4.86	2.27
							-10	6.63	2.26	6.45	2.29	6.28	2.32	6.21	2.34	6.14	2.35	6.01	2.37	5.91	2.39
							-5	7.73	2.37	7.53	2.41	7.36	2.44	7.28	2.45	7.20	2.47	7.07	2.49	6.95	2.51
							0	8.83	2.48	8.62	2.52	8.44	2.55	8.35	2.57	8.27	2.58	8.13	2.61	8.00	2.63
							2	9.27	2.53	9.06	2.56	8.87	2.60	8.78	2.61	8.70	2.63	8.55	2.66	8.42	2.68
							7	10.15	2.61	9.93	2.65	9.73	2.69	9.67	2.70	9.56	2.72	9.40	2.75	9.26	2.77
							10	11.03	2.70	10.81	2.74	10.60	2.78	10.51	2.79	10.42	2.81	10.25	2.84	10.10	2.87
							15	12.13	2.81	11.90	2.85	11.68	2.89	11.58	2.91	11.49	2.92	11.31	2.96	11.16	2.98
2000	3500	5000			10500	105%	-15	5.64	2.16	5.47	2.19	5.31	2.22	5.24	2.24	5.17	2.25	5.06	2.27	4.96	2.29
							-10	6.76	2.28	6.57	2.31	6.41	2.34	6.33	2.35	6.26	2.37	6.13	2.39	6.02	2.41
							-5	7.88	2.39	7.68	2.42	7.50	2.46	7.42	2.47	7.35	2.48	7.21	2.51	7.09	2.53
							0	9.00	2.50	8.79	2.54	8.60	2.57	8.52	2.59	8.44	2.60	8.29	2.63	8.16	2.65
							2	9.45	2.54	9.24	2.58	9.04	2.62	8.96	2.63	8.87	2.65	8.72	2.67	8.59	2.70
							7	10.35	2.63	10.13	2.67	9.93	2.71	9.86	2.72	9.75	2.74	9.59	2.77	9.44	2.79
							10	11.25	2.72	11.02	2.76	10.81	2.80	10.71	2.82	10.62	2.83	10.45	2.86	10.30	2.89
							15	12.37	2.83	12.13	2.87	11.91	2.91	11.81	2.93	11.72	2.95	11.54	2.98	11.38	3.01
2000	3500	6800			12300	123%	-15	5.75	2.21	5.57	2.24	5.41	2.27	5.33	2.29	5.27	2.30	5.15	2.32	5.05	2.34
							-10	6.88	2.33	6.69	2.36	6.52	2.39	6.45	2.41	6.37	2.42	6.24	2.44	6.13	2.46
							-5	8.02	2.44	7.82	2.48	7.64	2.51	7.56	2.52	7.48	2.54	7.34	2.56	7.22	2.59
							0	9.16	2.55	8.95	2.59	8.76	2.63	8.67	2.64	8.59	2.66	8.44	2.69	8.31	2.71
							2	9.62	2.60	9.41	2.64	9.21	2.67	9.12	2.69	9.03	2.71	8.88	2.73	8.74	2.76
							7	10.54	2.69	10.31	2.73	10.11	2.77	10.04	2.78	9.92	2.80	9.76	2.83	9.62	2.86
							10	11.45	2.78	11.22	2.82	11.01	2.86	10.91	2.88	10.81	2.89	10.64	2.93	10.49	2.95
							15	12.60	2.89	12.35	2.93	12.13	2.97	12.03	2.99	11.93	3.01	11.75	3.04	11.58	3.07
2000	5000	5000			12000	120%	-15	5.76	2.21	5.58	2.24	5.42	2.27	5.35	2.29	5.28	2.30	5.16	2.32	5.06	2.34
							-10	6.90	2.33	6.71	2.36	6.54	2.39	6.46	2.41	6.39	2.42	6.26	2.44	6.15	2.46
							-5	8.04	2.44	7.84	2.48	7.66	2.51	7.57	2.52	7.50	2.54	7.35	2.56	7.23	2.59
							0	9.18	2.55	8.97	2.59	8.78	2.63	8.69	2.64	8.61	2.66	8.46	2.69	8.33	2.71
							2	9.64	2.60	9.42	2.64	9.23	2.67	9.14	2.69	9.05	2.71	8.90	2.73	8.76	2.76
							7	10.56	2.69	10.33	2.73	10.13	2.77	10.06	2.78	9.94	2.80	9.78	2.83	9.64	2.86
							10	11.47	2.78	11.24	2.82	11.03	2.86	10.93	2.88	10.84	2.89	10.66	2.93	10.51	2.95
							15	12.62	2.89	12.38	2.93	12.16	2.97	12.05	2.99	11.95	3.01	11.77	3.04	11.61	3.07
2000	5000	6800			13800	138%	-15	6.19	2.29	5.99	2.32	5.82	2.35	5.74	2.37	5.67	2.38	5.54	2.40	5.44	2.42
							-10	7.41	2.41	7.21	2.45	7.02	2.48	6.94	2.49	6.86	2.51	6.72	2.53	6.60	2.55
							-5	8.64	2.53	8.42	2.57	8.23	2.60	8.14	2.62	8.05	2.63	7.90	2.66	7.77	2.68
							0	9.87	2.65	9.64	2.69	9.43	2.72	9.34	2.74	9.25	2.75	9.09	2.78	8.95	2.81
							2	10.36	2.69	10.13	2.73	9.92	2.77	9.82	2.79	9.73	2.80	9.56	2.83	9.42	2.86
							7	11.34	2.79	11.10	2.83	10.88	2.87	10.81	2.88	10.68	2.90	10.51	2.93	10.35	2.96
							10	12.33	2.88	12.08	2.92	11.85	2.96	11.74	2.98	11.64	3.00	11.46	3.03	11.30	3.06
							15	13.56	3.00	13.30	3.04	13.06	3.08	12.95	3.10	12.84	3.12	12.65	3.15	12.47	3.18
2000	6800	6800			15600	156%	-15	6.30	2.35	6.10	2.38	5.92	2.41	5.85	2.43	5.77	2.44	5.64	2.46	5.53	2.48
							-10	7.54	2.47	7.33	2.50	7.15	2.54	7.06	2.55	6.98	2.57	6.84	2.59	6.72	2.61
							-5	8.79	2.59	8.57	2.63	8.37	2.66	8.28	2.68	8.20	2.69	8.04	2.72	7.91	2.75
							0	10.04	2.71	9.81	2.75	9.60	2.79	9.50	2.80	9.41	2.82	9.25	2.85	9.10	2.88
							2	10.54	2.76	10.30	2.80	10.09	2.84	9.99	2.85	9.90	2.87	9.73	2.90	9.58	2.93
							7	11.54	2.85	11.30	2.90	11.07	2.94	11.00	2.95	10.87	2.97	10.69	3.00	10.54	3.03
							10	12.55	2.95	12.29	2.99	12.06	3.03	11.95	3.05	11.85	3.07	11.66	3.10	11.49	3.13
							15	13.80	3.07	13.54	3.11	13.29	3.16	13.18	3.18	13.07	3.19	12.87	3.23	12.69	3.26
2500	2500	2500			7500	75%	-15	5.51	2.11	5.34	2.14	5.19	2.17	5.12	2.18	5.05	2.19	4.94	2.21	4.84	2.23
							-10	6.60	2.22	6.42	2.25	6.26	2.28	6.18	2.29	6.11	2.31	5.99	2.33	5.88	2.35
							-5	7.70	2.33	7.50	2.36	7.33	2.39	7.25	2.41	7.18	2.42	7.04	2.44	6.93	2.47
							0	8.79	2.44	8.59	2.47	8.40	2.50	8.32	2.52	8.24	2.53	8.09	2.56	7.97	2.58
							2	9.23	2.48	9.02	2.52	8.83	2.55	8.75	2.56	8.67	2.58	8.52	2.61	8.39	2.63
							7	10.11	2.56	9.89	2.60	9.69	2.64	9.63	2.65	9.52	2.67	9.36	2.70	9.22	2.72
							10	10.98	2.65	10.76	2.69	10.56	2.73	10.46	2.74	10.37	2.76	10.21	2.79	10.06	2.81
							15	12.08	2.76	11.85	2.80	11.64	2.84	11.54	2.85	11.44	2.87	11.27	2.90	11.11	2.93

* All figures comply with EN14511

1. Cooling capacity is based on 27°CDB / 19°CWB (indoor temperature), 35°CDB (outdoor temperature).
2. Heating capacity is based on 20°CDB (indoor temperature), 7°CDB/6°CWB (outdoor temperature).
3. Capacities are based on the following conditions : - Corresponding refrigerant piping length : 5m / - Level difference : 0m
4. The total ability of connected a indoor unit is up to 17.3kW
5. It is impossible to connect the indoor unit for one room only.
6. This data is reference data for temperature capacity trend.

2) Heating

HEATING

Combination (Capacity Index)					Combination (Total)	Combination (%)	Outdoor Temperature (°C, DB)	Indoor Temperature(°C, WB)													
								14		16		18		20		21		22		24	
								TC(kW)	PI(kW)	TC(kW)	PI(kW)	TC(kW)	PI(kW)	TC(kW)	PI(kW)	TC(kW)	PI(kW)	TC(kW)	PI(kW)	TC(kW)	PI(kW)
2500	2500	3500			8500	85%	-15	5.55	2.04	5.38	2.07	5.22	2.09	5.15	2.10	5.09	2.12	4.97	2.14	4.88	2.15
							-10	6.65	2.14	6.47	2.17	6.30	2.20	6.23	2.22	6.16	2.23	6.03	2.25	5.93	2.27
							-5	7.75	2.25	7.56	2.28	7.38	2.31	7.30	2.32	7.23	2.34	7.09	2.36	6.98	2.38
							0	8.85	2.35	8.65	2.39	8.46	2.42	8.38	2.43	8.30	2.45	8.15	2.47	8.03	2.50
							2	9.30	2.39	9.09	2.43	8.90	2.46	8.81	2.48	8.73	2.49	8.58	2.52	8.45	2.54
							7	10.18	2.48	9.96	2.51	9.76	2.55	9.70	2.56	9.59	2.58	9.43	2.61	9.29	2.63
							10	11.06	2.56	10.84	2.60	10.63	2.63	10.54	2.65	10.45	2.67	10.28	2.69	10.14	2.72
							15	12.17	2.66	11.94	2.70	11.72	2.74	11.62	2.76	11.53	2.77	11.35	2.80	11.19	2.83
2500	2500	5000			10000	100%	-15	5.66	2.19	5.48	2.23	5.33	2.26	5.26	2.27	5.19	2.28	5.07	2.30	4.97	2.32
							-10	6.78	2.31	6.59	2.34	6.43	2.37	6.35	2.39	6.28	2.40	6.15	2.43	6.04	2.45
							-5	7.90	2.42	7.71	2.46	7.53	2.49	7.45	2.51	7.37	2.52	7.23	2.55	7.11	2.57
							0	9.03	2.54	8.82	2.57	8.63	2.61	8.54	2.62	8.46	2.64	8.31	2.67	8.18	2.69
							2	9.48	2.58	9.26	2.62	9.07	2.65	8.98	2.67	8.90	2.69	8.75	2.71	8.61	2.74
							7	10.38	2.67	10.16	2.71	9.96	2.75	9.89	2.76	9.78	2.78	9.61	2.81	9.47	2.84
							10	11.28	2.76	11.05	2.80	10.84	2.84	10.74	2.86	10.65	2.87	10.48	2.90	10.33	2.93
							15	12.41	2.87	12.17	2.91	11.95	2.95	11.85	2.97	11.75	2.99	11.57	3.02	11.41	3.05
2500	2500	6800			11800	118%	-15	6.10	2.24	5.91	2.28	5.74	2.30	5.66	2.32	5.59	2.33	5.46	2.35	5.36	2.37
							-10	7.30	2.36	7.10	2.39	6.92	2.43	6.84	2.44	6.76	2.45	6.62	2.48	6.51	2.50
							-5	8.51	2.48	8.30	2.51	8.11	2.55	8.02	2.56	7.93	2.58	7.79	2.60	7.66	2.62
							0	9.72	2.59	9.50	2.63	9.29	2.66	9.20	2.68	9.11	2.70	8.95	2.72	8.81	2.75
							2	10.21	2.64	9.98	2.68	9.77	2.71	9.67	2.73	9.58	2.74	9.42	2.77	9.28	2.80
							7	11.18	2.73	10.94	2.77	10.72	2.81	10.65	2.82	10.53	2.84	10.35	2.87	10.20	2.90
							10	12.15	2.82	11.90	2.86	11.68	2.90	11.57	2.92	11.47	2.94	11.29	2.97	11.13	3.00
							15	13.36	2.93	13.11	2.98	12.87	3.02	12.76	3.04	12.65	3.05	12.46	3.09	12.29	3.12
2500	3500	3500			9500	95%	-15	5.59	2.11	5.42	2.15	5.26	2.17	5.19	2.19	5.13	2.20	5.01	2.22	4.91	2.24
							-10	6.70	2.23	6.51	2.26	6.35	2.29	6.27	2.30	6.20	2.31	6.08	2.34	5.97	2.36
							-5	7.81	2.34	7.61	2.37	7.44	2.40	7.36	2.42	7.28	2.43	7.14	2.45	7.03	2.48
							0	8.92	2.44	8.71	2.48	8.53	2.51	8.44	2.53	8.36	2.54	8.21	2.57	8.09	2.59
							2	9.36	2.49	9.15	2.52	8.96	2.56	8.87	2.57	8.79	2.59	8.64	2.62	8.51	2.64
							7	10.25	2.57	10.03	2.61	9.84	2.65	9.77	2.66	9.66	2.68	9.50	2.71	9.36	2.73
							10	11.14	2.66	10.92	2.70	10.71	2.74	10.61	2.75	10.52	2.77	10.36	2.80	10.21	2.83
							15	12.26	2.77	12.02	2.81	11.81	2.85	11.70	2.86	11.61	2.88	11.43	2.91	11.27	2.94
2500	3500	5000			11000	110%	-15	5.71	2.16	5.53	2.19	5.37	2.22	5.30	2.24	5.23	2.25	5.11	2.27	5.01	2.29
							-10	6.84	2.28	6.65	2.31	6.48	2.34	6.40	2.35	6.33	2.37	6.20	2.39	6.09	2.41
							-5	7.97	2.39	7.77	2.42	7.59	2.46	7.51	2.47	7.43	2.48	7.29	2.51	7.17	2.53
							0	9.10	2.50	8.89	2.54	8.70	2.57	8.61	2.59	8.53	2.60	8.38	2.63	8.25	2.65
							2	9.55	2.54	9.34	2.58	9.15	2.62	9.06	2.63	8.97	2.65	8.82	2.67	8.68	2.70
							7	10.46	2.63	10.24	2.67	10.04	2.71	9.97	2.72	9.85	2.74	9.69	2.77	9.55	2.79
							10	11.37	2.72	11.14	2.76	10.93	2.80	10.83	2.82	10.74	2.83	10.57	2.86	10.42	2.89
							15	12.51	2.83	12.27	2.87	12.05	2.91	11.94	2.93	11.85	2.95	11.66	2.98	11.50	3.01
2500	3500	6800			12800	128%	-15	6.14	2.25	5.94	2.28	5.77	2.31	5.70	2.33	5.62	2.34	5.50	2.36	5.39	2.38
							-10	7.35	2.37	7.15	2.40	6.97	2.43	6.88	2.45	6.80	2.46	6.67	2.49	6.55	2.51
							-5	8.57	2.48	8.35	2.52	8.16	2.55	8.07	2.57	7.99	2.58	7.84	2.61	7.71	2.63
							0	9.79	2.60	9.56	2.64	9.35	2.67	9.26	2.69	9.17	2.71	9.01	2.73	8.87	2.76
							2	10.27	2.65	10.04	2.69	9.83	2.72	9.74	2.74	9.65	2.75	9.48	2.78	9.34	2.81
							7	11.25	2.74	11.01	2.78	10.79	2.82	10.72	2.83	10.60	2.85	10.42	2.88	10.27	2.91
							10	12.23	2.83	11.98	2.87	11.75	2.91	11.65	2.93	11.55	2.95	11.36	2.98	11.20	3.01
							15	13.45	2.94	13.19	2.99	12.95	3.03	12.84	3.05	12.74	3.07	12.54	3.10	12.37	3.13
2500	5000	5000			12500	125%	-15	6.15	2.24	5.96	2.28	5.78	2.30	5.71	2.32	5.63	2.33	5.51	2.35	5.40	2.37
							-10	7.36	2.36	7.16	2.39	6.98	2.43	6.90	2.44	6.82	2.45	6.68	2.48	6.56	2.50
							-5	8.58	2.48	8.37	2.51	8.17	2.55	8.09	2.56	8.00	2.58	7.85	2.60	7.72	2.62
							0	9.80	2.59	9.58	2.63	9.37	2.66	9.28	2.68	9.19	2.70	9.03	2.72	8.89	2.75
							2	10.29	2.64	10.06	2.68	9.85	2.71	9.76	2.73	9.66	2.74	9.50	2.77	9.35	2.80
							7	11.27	2.73	11.03	2.77	10.81	2.81	10.74	2.82	10.62	2.84	10.44	2.87	10.29	2.90
							10	12.25	2.82	12.00	2.86	11.77	2.90	11.67	2.92	11.57	2.94	11.38	2.97	11.22	3.00
							15	13.48	2.93	13.22	2.98	12.98	3.02	12.87	3.04	12.76	3.05	12.57	3.09	12.39	3.12
2500	5000	6800			14300	143%	-15	6.30	2.33	6.10	2.36	5.92	2.39	5.85	2.41	5.77	2.42	5.64	2.45	5.53	2.46
							-10	7.54	2.45	7.33	2.49	7.15	2.52	7.06	2.54	6.98	2.55	6.84	2.57	6.72	2.60
							-5	8.79	2.57	8.57	2.61	8.37	2.65	8.28	2.66	8.20	2.68	8.04	2.70	7.91	2.73
							0	10.04	2.69	9.81	2.73	9.60	2.77	9.50	2.79	9.41	2.80	9.25	2.83	9.10	2.86
							2	10.54	2.74	10.30	2.78	10.09	2.82	9.99	2.84	9.90	2.85	9.73	2.88	9.58	2.91
							7	11.54	2.84	11.30	2.88	11.07	2.92	11.00	2.93	10.87	2.95	10.69	2.98	10.54	3.01
							10	12.55	2.93	12.29	2.97	12.06	3.01	11.95	3.03	11.85	3.05	11.66	3.08	11.49	3.11
							15	13.80	3.05	13.54	3.09	13.29	3.13	13.18	3.15	13.07	3.17	12.87	3.21	12.69	3.24
2500	6800	6800			16100	161%	-15	6.30	2.38	6.10	2.41	5.92	2.44	5.85	2.46	5.77	2.47	5.64	2.50	5.53	2.52
							-10	7.54	2.50	7.33	2.54	7.15	2.57	7.06	2.59	6.98	2.60	6.84	2.63	6.72	2.65
							-5	8.79	2.62	8.57	2.66	8.37	2.70	8.28	2.72	8.20	2.73	8.04	2.76	7.91	2.78
							0	10.04	2.75	9.81	2.79	9.60	2.83	9.50	2.84	9.41	2.86	9.25	2.89	9.10	2.91
							2	10.54	2.80	10.30	2.84	10.09	2.88	9.99	2.89	9.90	2.91	9.73	2.94	9.58	2.97
							7	11.54	2.89	11.30	2.94	11.07	2.98	11.00	2.99	10.87	3.01	10.69	3.04	10.54	3.07
							10	12.55	2.99	12.29	3.03	12.06	3.08	11.95	3.09	11.85	3.11	11.66	3.15	11.49	3.18
							15	13.80	3.11	13.54	3.16	13.29	3.20	13.18	3.22	13.07	3.24	12.87	3.27	12.69	3.31

* All figures comply with EN14511

1. Cooling capacity is based on 27°CDB / 19°CWB (indoor temperature), 35°CDB (outdoor temperature).
2. Heating capacity is based on 20°CDB (indoor temperature), 7°CDB/6°CWB (outdoor temperature).
3. Capacities are based on the following conditions : - Corresponding refrigerant piping length : 5m / - Level difference : 0m
4. The total ability of connected a indoor unit is up to 17.3kW
5. It is impossible to connect the indoor unit for one room only.
6. This data is reference data for temperature capacity trend.

7 AJ100FCJ5EH

2) Heating

HEATING

Combination (Capacity Index)					Combination (Total)	Combination (%)	Outdoor Temperature (°C, DB)	Indoor Temperature(°C, WB)													
								14		16		18		20		21		22		24	
								TC(kW)	PI(kW)	TC(kW)	PI(kW)	TC(kW)	PI(kW)	TC(kW)	PI(kW)	TC(kW)	PI(kW)	TC(kW)	PI(kW)	TC(kW)	PI(kW)
3500	3500	3500			10500	105%	-15	5.63	2.15	5.46	2.19	5.30	2.21	5.23	2.23	5.16	2.24	5.05	2.26	4.95	2.28
							-10	6.75	2.27	6.56	2.30	6.39	2.33	6.32	2.34	6.25	2.36	6.12	2.38	6.01	2.40
							-5	7.86	2.38	7.67	2.41	7.49	2.45	7.41	2.46	7.33	2.48	7.19	2.50	7.08	2.52
							0	8.98	2.49	8.77	2.53	8.59	2.56	8.50	2.58	8.42	2.59	8.27	2.62	8.14	2.64
							2	9.43	2.53	9.22	2.57	9.03	2.61	8.94	2.62	8.85	2.64	8.70	2.67	8.57	2.69
							7	10.33	2.62	10.11	2.66	9.91	2.70	9.84	2.71	9.73	2.73	9.57	2.76	9.43	2.78
							10	11.22	2.71	11.00	2.75	10.79	2.79	10.69	2.80	10.60	2.82	10.43	2.85	10.28	2.88
							15	12.35	2.82	12.11	2.86	11.89	2.90	11.79	2.92	11.69	2.94	11.51	2.97	11.35	3.00
3500	3500	5000			12000	120%	-15	5.75	2.20	5.57	2.23	5.41	2.26	5.33	2.28	5.27	2.29	5.15	2.31	5.05	2.33
							-10	6.88	2.32	6.69	2.35	6.52	2.38	6.45	2.40	6.37	2.41	6.24	2.43	6.13	2.45
							-5	8.02	2.43	7.82	2.47	7.64	2.50	7.56	2.52	7.48	2.53	7.34	2.56	7.22	2.58
							0	9.16	2.55	8.95	2.58	8.76	2.62	8.67	2.63	8.59	2.65	8.44	2.68	8.31	2.70
							2	9.62	2.59	9.41	2.63	9.21	2.66	9.12	2.68	9.03	2.70	8.88	2.72	8.74	2.75
							7	10.54	2.68	10.31	2.72	10.11	2.76	10.04	2.77	9.92	2.79	9.76	2.82	9.62	2.85
							10	11.45	2.77	11.22	2.81	11.01	2.85	10.91	2.87	10.81	2.88	10.64	2.91	10.49	2.94
							15	12.60	2.88	12.35	2.92	12.13	2.96	12.03	2.98	11.93	3.00	11.75	3.03	11.58	3.06
3500	3500	6800			13800	138%	-15	6.18	2.28	5.98	2.32	5.81	2.35	5.73	2.36	5.66	2.37	5.53	2.40	5.43	2.41
							-10	7.40	2.40	7.19	2.44	7.01	2.47	6.93	2.48	6.85	2.50	6.71	2.52	6.59	2.54
							-5	8.62	2.52	8.41	2.56	8.21	2.59	8.12	2.61	8.04	2.62	7.89	2.65	7.76	2.67
							0	9.85	2.64	9.62	2.68	9.42	2.71	9.32	2.73	9.23	2.74	9.07	2.77	8.93	2.80
							2	10.34	2.68	10.11	2.72	9.90	2.76	9.80	2.78	9.71	2.79	9.54	2.82	9.40	2.85
							7	11.32	2.78	11.08	2.82	10.86	2.86	10.79	2.87	10.66	2.89	10.49	2.92	10.34	2.95
							10	12.31	2.87	12.06	2.91	11.83	2.95	11.72	2.97	11.62	2.99	11.44	3.02	11.27	3.05
							15	13.54	2.98	13.28	3.03	13.04	3.07	12.93	3.09	12.82	3.11	12.62	3.14	12.45	3.17
3500	5000	5000			13500	135%	-15	6.18	2.28	5.99	2.32	5.82	2.35	5.74	2.36	5.67	2.37	5.54	2.40	5.43	2.41
							-10	7.41	2.40	7.20	2.44	7.02	2.47	6.93	2.48	6.86	2.50	6.72	2.52	6.60	2.54
							-5	8.63	2.52	8.41	2.56	8.22	2.59	8.13	2.61	8.05	2.62	7.90	2.65	7.77	2.67
							0	9.86	2.64	9.63	2.68	9.42	2.71	9.33	2.73	9.24	2.74	9.08	2.77	8.94	2.80
							2	10.35	2.68	10.12	2.72	9.91	2.76	9.81	2.78	9.72	2.79	9.55	2.82	9.41	2.85
							7	11.33	2.78	11.09	2.82	10.87	2.86	10.80	2.87	10.67	2.89	10.50	2.92	10.35	2.95
							10	12.32	2.87	12.07	2.91	11.84	2.95	11.73	2.97	11.63	2.99	11.45	3.02	11.29	3.05
							15	13.55	2.98	13.29	3.03	13.05	3.07	12.94	3.09	12.83	3.11	12.64	3.14	12.46	3.17
3500	5000	6800			15300	153%	-15	6.30	2.33	6.10	2.36	5.92	2.39	5.85	2.41	5.77	2.42	5.64	2.45	5.53	2.46
							-10	7.54	2.45	7.33	2.49	7.15	2.52	7.06	2.54	6.98	2.55	6.84	2.57	6.72	2.60
							-5	8.79	2.57	8.57	2.61	8.37	2.65	8.28	2.66	8.20	2.68	8.04	2.70	7.91	2.73
							0	10.04	2.69	9.81	2.73	9.60	2.77	9.50	2.79	9.41	2.80	9.25	2.83	9.10	2.86
							2	10.54	2.74	10.30	2.78	10.09	2.82	9.99	2.84	9.90	2.85	9.73	2.88	9.58	2.91
							7	11.54	2.84	11.30	2.88	11.07	2.92	11.00	2.93	10.87	2.95	10.69	2.98	10.54	3.01
							10	12.55	2.93	12.29	2.97	12.06	3.01	11.95	3.03	11.85	3.05	11.66	3.08	11.49	3.11
							15	13.80	3.05	13.54	3.09	13.29	3.13	13.18	3.15	13.07	3.17	12.87	3.21	12.69	3.24
3500	6800	6800			17100	171%	-15	6.30	2.42	6.10	2.45	5.92	2.48	5.85	2.50	5.77	2.51	5.64	2.54	5.53	2.56
							-10	7.54	2.54	7.33	2.58	7.15	2.61	7.06	2.63	6.98	2.65	6.84	2.67	6.72	2.69
							-5	8.79	2.67	8.57	2.71	8.37	2.74	8.28	2.76	8.20	2.78	8.04	2.80	7.91	2.83
							0	10.04	2.79	9.81	2.84	9.60	2.87	9.50	2.89	9.41	2.91	9.25	2.94	9.10	2.96
							2	10.54	2.84	10.30	2.89	10.09	2.92	9.99	2.94	9.90	2.96	9.73	2.99	9.58	3.02
							7	11.54	2.94	11.30	2.99	11.07	3.03	11.00	3.04	10.87	3.06	10.69	3.09	10.54	3.12
							10	12.55	3.04	12.29	3.09	12.06	3.13	11.95	3.15	11.85	3.16	11.66	3.20	11.49	3.23
							15	13.80	3.16	13.54	3.21	13.29	3.25	13.18	3.27	13.07	3.29	12.87	3.33	12.69	3.36
5000	5000	5000			15000	150%	-15	6.30	2.33	6.10	2.36	5.92	2.39	5.85	2.41	5.77	2.42	5.64	2.45	5.53	2.46
							-10	7.54	2.45	7.33	2.49	7.15	2.52	7.06	2.54	6.98	2.55	6.84	2.57	6.72	2.60
							-5	8.79	2.57	8.57	2.61	8.37	2.65	8.28	2.66	8.20	2.68	8.04	2.70	7.91	2.73
							0	10.04	2.69	9.81	2.73	9.60	2.77	9.50	2.79	9.41	2.80	9.25	2.83	9.10	2.86
							2	10.54	2.74	10.30	2.78	10.09	2.82	9.99	2.84	9.90	2.85	9.73	2.88	9.58	2.91
							7	11.54	2.84	11.30	2.88	11.07	2.92	11.00	2.93	10.87	2.95	10.69	2.98	10.54	3.01
							10	12.55	2.93	12.29	2.97	12.06	3.01	11.95	3.03	11.85	3.05	11.66	3.08	11.49	3.11
							15	13.80	3.05	13.54	3.09	13.29	3.13	13.18	3.15	13.07	3.17	12.87	3.21	12.69	3.24
5000	5000	6800			16800	168%	-15	6.30	2.42	6.10	2.45	5.92	2.48	5.77	2.51	5.70	2.53	5.64	2.54	5.53	2.56
							-10	7.54	2.54	7.33	2.58	7.15	2.61	6.98	2.65	6.91	2.66	6.84	2.67	6.72	2.69
							-5	8.79	2.67	8.57	2.71	8.37	2.74	8.20	2.78	8.12	2.79	8.04	2.80	7.91	2.83
							0	10.04	2.79	9.81	2.84	9.60	2.87	9.41	2.91	9.33	2.92	9.25	2.94	9.10	2.96
							2	10.54	2.84	10.30	2.89	10.09	2.92	9.90	2.96	9.81	2.97	9.73	2.99	9.58	3.02
							7	11.79	2.97	11.55	3.01	11.32	3.05	11.00	3.04	11.02	3.10	10.93	3.12	10.78	3.15
							10	12.55	3.04	12.29	3.09	12.06	3.13	11.85	3.16	11.75	3.18	11.66	3.20	11.49	3.23
							15	13.80	3.16	13.54	3.21	13.29	3.25	13.07	3.29	12.97	3.31	12.87	3.33	12.69	3.36
2000	2000	2000	2000		8000	80%	-15	5.04	1.78	4.88	1.81	4.74	1.83	4.68	1.84	4.62	1.85	4.51	1.87	4.43	1.88
							-10	6.03	1.87	5.87	1.90	5.72	1.93	5.65	1.94	5.59	1.95	5.47	1.97	5.38	1.98
							-5	7.03	1.97	6.86	2.00	6.70	2.02	6.62	2.03	6.56	2.05	6.43	2.07	6.33	2.08
							0	8.03	2.06	7.85	2.09	7.68	2.12	7.60	2.13	7.53	2.14	7.40	2.16	7.28	2.18
							2	8.43	2.09	8.24	2.13	8.07	2.15	7.99	2.17	7.92	2.18	7.78	2.20	7.66	2.22
							7	9.23	2.17	9.04	2.20	8.86	2.23	8.80	2.24	8.70	2.26	8.55	2.28	8.43	2.30
							10	10.04	2.24	9.83	2.27	9.65	2.30	9.56	2.32	9.48	2.33	9.33	2.36	9.20	2.38
							15	11.04	2.33	10.83	2.36	10.63	2.40	10.54	2.41	10.46	2.43	10.30	2.45	10.15	2.48

* All figures comply with EN14511

1. Cooling capacity is based on 27°CDB / 19°CWB (indoor temperature), 35°CDB (outdoor temperature).
2. Heating capacity is based on 20°CDB (indoor temperature), 7°CDB/6°CWB (outdoor temperature).
3. Capacities are based on the following conditions : - Corresponding refrigerant piping length : 5m / - Level difference : 0m
4. The total ability of connected a indoor unit is up to 17.3kW
5. It is impossible to connect the indoor unit for one room only.
6. This data is reference data for temperature capacity trend.

2) Heating

HEATING

Combination (Capacity Index)					Combination (Total)	Combination (%)	Outdoor Temperature (°C, DB)	Indoor Temperature(°C, WB)													
								14		16		18		20		21		22		24	
								TC(kW)	PI(kW)	TC(kW)	PI(kW)	TC(kW)	PI(kW)	TC(kW)	PI(kW)	TC(kW)	PI(kW)	TC(kW)	PI(kW)	TC(kW)	PI(kW)
2000	2000	2000	2500		8500	85%	-15	5.51	2.03	5.34	2.06	5.19	2.08	5.12	2.10	5.05	2.11	4.94	2.13	4.84	2.15
							-10	6.60	2.13	6.42	2.17	6.26	2.19	6.18	2.21	6.11	2.22	5.99	2.24	5.88	2.26
							-5	7.70	2.24	7.50	2.27	7.33	2.30	7.25	2.32	7.18	2.33	7.04	2.35	6.93	2.37
							0	8.79	2.34	8.59	2.38	8.40	2.41	8.32	2.42	8.24	2.44	8.09	2.46	7.97	2.49
							2	9.23	2.38	9.02	2.42	8.83	2.45	8.75	2.47	8.67	2.48	8.52	2.51	8.39	2.53
							7	10.11	2.47	9.89	2.50	9.69	2.54	9.63	2.55	9.52	2.57	9.36	2.60	9.22	2.62
							10	10.98	2.55	10.76	2.59	10.56	2.62	10.46	2.64	10.37	2.65	10.21	2.68	10.06	2.71
							15	12.08	2.65	11.85	2.69	11.64	2.73	11.54	2.75	11.44	2.76	11.27	2.79	11.11	2.82
2000	2000	2000	3500		9500	95%	-15	5.55	2.17	5.37	2.20	5.22	2.23	5.15	2.24	5.08	2.26	4.97	2.28	4.87	2.30
							-10	6.64	2.28	6.46	2.32	6.30	2.35	6.22	2.36	6.15	2.38	6.03	2.40	5.92	2.42
							-5	7.74	2.40	7.55	2.43	7.37	2.46	7.29	2.48	7.22	2.49	7.08	2.52	6.97	2.54
							0	8.85	2.51	8.64	2.55	8.46	2.58	8.37	2.60	8.29	2.61	8.14	2.64	8.02	2.66
							2	9.29	2.55	9.08	2.59	8.89	2.63	8.80	2.64	8.72	2.66	8.57	2.68	8.44	2.71
							7	10.17	2.64	9.95	2.68	9.75	2.72	9.69	2.73	9.58	2.75	9.42	2.78	9.28	2.80
							10	11.05	2.73	10.83	2.77	10.62	2.81	10.53	2.83	10.44	2.84	10.27	2.87	10.13	2.90
							15	12.16	2.84	11.92	2.88	11.71	2.92	11.61	2.94	11.51	2.96	11.34	2.99	11.18	3.02
2000	2000	2000	5000		11000	110%	-15	5.67	2.18	5.49	2.21	5.33	2.24	5.26	2.25	5.19	2.26	5.08	2.29	4.98	2.31
							-10	6.79	2.29	6.60	2.33	6.43	2.36	6.36	2.37	6.28	2.38	6.16	2.41	6.05	2.43
							-5	7.91	2.41	7.71	2.44	7.53	2.47	7.45	2.49	7.38	2.50	7.24	2.53	7.12	2.55
							0	9.04	2.52	8.83	2.56	8.64	2.59	8.55	2.61	8.47	2.62	8.32	2.65	8.19	2.67
							2	9.49	2.56	9.27	2.60	9.08	2.64	8.99	2.65	8.91	2.67	8.76	2.69	8.62	2.72
							7	10.39	2.65	10.17	2.69	9.97	2.73	9.90	2.74	9.79	2.76	9.62	2.79	9.48	2.82
							10	11.29	2.74	11.06	2.78	10.85	2.82	10.76	2.84	10.66	2.85	10.49	2.88	10.34	2.91
							15	12.42	2.85	12.18	2.89	11.96	2.93	11.86	2.95	11.76	2.97	11.58	3.00	11.42	3.03
2000	2000	2000	6800		12800	128%	-15	6.10	2.23	5.91	2.27	5.74	2.30	5.66	2.31	5.59	2.32	5.47	2.35	5.36	2.36
							-10	7.31	2.35	7.11	2.39	6.93	2.42	6.84	2.43	6.77	2.44	6.63	2.47	6.51	2.49
							-5	8.52	2.47	8.31	2.50	8.11	2.54	8.03	2.55	7.94	2.57	7.79	2.59	7.67	2.61
							0	9.73	2.58	9.51	2.62	9.30	2.66	9.21	2.67	9.12	2.69	8.96	2.71	8.82	2.74
							2	10.22	2.63	9.99	2.67	9.78	2.70	9.68	2.72	9.59	2.73	9.43	2.76	9.28	2.79
							7	11.19	2.72	10.95	2.76	10.73	2.80	10.66	2.81	10.54	2.83	10.36	2.86	10.21	2.89
							10	12.16	2.81	11.91	2.85	11.69	2.89	11.58	2.91	11.48	2.93	11.30	2.96	11.14	2.98
							15	13.38	2.92	13.12	2.97	12.88	3.01	12.77	3.03	12.67	3.04	12.47	3.08	12.30	3.11
2000	2000	2500	2500		9000	90%	-15	5.58	2.06	5.40	2.09	5.25	2.12	5.18	2.13	5.11	2.14	4.99	2.16	4.90	2.18
							-10	6.68	2.17	6.49	2.20	6.33	2.23	6.25	2.24	6.18	2.25	6.06	2.28	5.95	2.29
							-5	7.78	2.27	7.59	2.31	7.41	2.34	7.33	2.35	7.26	2.37	7.12	2.39	7.00	2.41
							0	8.89	2.38	8.69	2.42	8.50	2.45	8.41	2.46	8.33	2.48	8.19	2.50	8.06	2.52
							2	9.33	2.42	9.12	2.46	8.93	2.49	8.85	2.51	8.76	2.52	8.61	2.55	8.48	2.57
							7	10.22	2.51	10.00	2.54	9.81	2.58	9.74	2.59	9.63	2.61	9.47	2.64	9.33	2.66
							10	11.11	2.59	10.88	2.63	10.68	2.66	10.58	2.68	10.49	2.70	10.32	2.73	10.18	2.75
							15	12.22	2.69	11.99	2.73	11.77	2.77	11.67	2.79	11.57	2.81	11.40	2.84	11.24	2.86
2000	2000	2500	3500		10000	100%	-15	5.60	2.13	5.43	2.16	5.27	2.19	5.20	2.20	5.14	2.22	5.02	2.24	4.92	2.25
							-10	6.71	2.24	6.53	2.28	6.36	2.31	6.29	2.32	6.21	2.33	6.09	2.35	5.98	2.37
							-5	7.82	2.35	7.63	2.39	7.45	2.42	7.37	2.43	7.29	2.45	7.16	2.47	7.04	2.49
							0	8.94	2.46	8.73	2.50	8.54	2.53	8.46	2.55	8.38	2.56	8.23	2.59	8.10	2.61
							2	9.38	2.51	9.17	2.54	8.98	2.58	8.89	2.59	8.81	2.61	8.66	2.64	8.53	2.66
							7	10.27	2.59	10.05	2.63	9.86	2.67	9.79	2.68	9.68	2.70	9.52	2.73	9.38	2.75
							10	11.17	2.68	10.94	2.72	10.73	2.76	10.64	2.77	10.54	2.79	10.38	2.82	10.23	2.85
							15	12.28	2.79	12.05	2.83	11.83	2.87	11.73	2.89	11.63	2.90	11.45	2.93	11.30	2.96
2000	2000	2500	5000		11500	115%	-15	5.73	2.18	5.55	2.21	5.39	2.24	5.32	2.25	5.25	2.26	5.13	2.29	5.03	2.31
							-10	6.86	2.29	6.67	2.33	6.50	2.36	6.43	2.37	6.35	2.38	6.22	2.41	6.12	2.43
							-5	8.00	2.41	7.80	2.44	7.62	2.47	7.54	2.49	7.46	2.50	7.32	2.53	7.20	2.55
							0	9.14	2.52	8.93	2.56	8.73	2.59	8.65	2.61	8.56	2.62	8.41	2.65	8.28	2.67
							2	9.59	2.56	9.38	2.60	9.18	2.64	9.09	2.65	9.01	2.67	8.85	2.69	8.72	2.72
							7	10.50	2.65	10.28	2.69	10.08	2.73	10.01	2.74	9.89	2.76	9.73	2.79	9.59	2.82
							10	11.42	2.74	11.19	2.78	10.97	2.82	10.88	2.84	10.78	2.85	10.61	2.88	10.46	2.91
							15	12.56	2.85	12.32	2.89	12.10	2.93	11.99	2.95	11.89	2.97	11.71	3.00	11.55	3.03
2000	2000	2500	6800		13300	133%	-15	6.16	2.27	5.97	2.30	5.80	2.33	5.72	2.34	5.65	2.36	5.52	2.38	5.41	2.40
							-10	7.38	2.38	7.17	2.42	6.99	2.45	6.91	2.47	6.83	2.48	6.69	2.50	6.57	2.53
							-5	8.60	2.50	8.38	2.54	8.19	2.57	8.10	2.59	8.02	2.60	7.87	2.63	7.74	2.65
							0	9.82	2.62	9.59	2.66	9.39	2.69	9.29	2.71	9.21	2.73	9.04	2.75	8.90	2.78
							2	10.31	2.67	10.08	2.71	9.87	2.74	9.77	2.76	9.68	2.77	9.52	2.80	9.37	2.83
							7	11.29	2.76	11.05	2.80	10.83	2.84	10.76	2.85	10.64	2.87	10.46	2.90	10.31	2.93
							10	12.27	2.85	12.02	2.89	11.80	2.93	11.69	2.95	11.59	2.97	11.41	3.00	11.24	3.03
							15	13.50	2.96	13.24	3.01	13.00	3.05	12.89	3.07	12.78	3.09	12.59	3.12	12.42	3.15
2000	2000	3500	3500		11000	110%	-15	5.66	2.17	5.48	2.20	5.32	2.23	5.25	2.24	5.18	2.26	5.07	2.28	4.97	2.30
							-10	6.78	2.28	6.59	2.32	6.42	2.35	6.34	2.36	6.27	2.38	6.14	2.40	6.04	2.42
							-5	7.90	2.40	7.70	2.43	7.52	2.46	7.44	2.48	7.36	2.49	7.22	2.52	7.11	2.54
							0	9.02	2.51	8.81	2.55	8.62	2.58	8.53	2.60	8.45	2.61	8.30	2.64	8.18	2.66
							2	9.47	2.55	9.26	2.59	9.06	2.63	8.97	2.64	8.89	2.66	8.74	2.68	8.61	2.71
							7	10.37	2.64	10.15	2.68	9.95	2.72	9.88	2.73	9.77	2.75	9.60	2.78	9.46	2.80
							10	11.27	2.73	11.04	2.77	10.83	2.81	10.73	2.83	10.64	2.84	10.47	2.87	10.32	2.90
							15	12.40	2.84	12.16	2.88	11.94	2.92	11.84	2.94	11.74	2.96	11.56	2.99	11.40	3.02

* All figures comply with EN14511

1. Cooling capacity is based on 27°CDB / 19°CWB (indoor temperature), 35°CDB (outdoor temperature).
2. Heating capacity is based on 20°CDB (indoor temperature), 7°CDB/6°CWB (outdoor temperature).
3. Capacities are based on the following conditions : - Corresponding refrigerant piping length : 5m / - Level difference : 0m
4. The total ability of connected a indoor unit is up to 17.3kW
5. It is impossible to connect the indoor unit for one room only.
6. This data is reference data for temperature capacity trend.

7 AJ100FCJ5EH

2) Heating

HEATING

Combination (Capacity Index)					Combination (Total)	Combination (%)	Outdoor Temperature (°C, DB)	Indoor Temperature(°C, WB)													
								14		16		18		20		21		22		24	
								TC(kW)	PI(kW)	TC(kW)	PI(kW)	TC(kW)	PI(kW)	TC(kW)	PI(kW)	TC(kW)	PI(kW)	TC(kW)	PI(kW)	TC(kW)	PI(kW)
2000	2000	3500	5000		12500	125%	-15	6.10	2.22	5.91	2.25	5.74	2.28	5.66	2.29	5.59	2.31	5.47	2.33	5.36	2.35
							-10	7.31	2.33	7.11	2.37	6.93	2.40	6.84	2.41	6.77	2.43	6.63	2.45	6.51	2.47
							-5	8.52	2.45	8.31	2.49	8.11	2.52	8.03	2.53	7.94	2.55	7.79	2.57	7.67	2.60
							0	9.73	2.56	9.51	2.60	9.30	2.64	9.21	2.65	9.12	2.67	8.96	2.70	8.82	2.72
							2	10.22	2.61	9.99	2.65	9.78	2.68	9.68	2.70	9.59	2.72	9.43	2.74	9.28	2.77
							7	11.19	2.70	10.95	2.74	10.73	2.78	10.66	2.79	10.54	2.81	10.36	2.84	10.21	2.87
							10	12.16	2.79	11.91	2.83	11.69	2.87	11.58	2.89	11.48	2.90	11.30	2.94	11.14	2.96
							15	13.38	2.90	13.12	2.95	12.88	2.99	12.77	3.00	12.67	3.02	12.47	3.05	12.30	3.08
2000	2000	3500	6800		14300	143%	-15	6.19	2.31	6.00	2.34	5.83	2.37	5.75	2.38	5.68	2.40	5.55	2.42	5.44	2.44
							-10	7.42	2.43	7.21	2.46	7.03	2.49	6.95	2.51	6.87	2.52	6.73	2.55	6.61	2.57
							-5	8.65	2.55	8.43	2.58	8.23	2.62	8.15	2.63	8.06	2.65	7.91	2.68	7.78	2.70
							0	9.88	2.66	9.65	2.70	9.44	2.74	9.35	2.76	9.26	2.77	9.09	2.80	8.95	2.83
							2	10.37	2.71	10.14	2.75	9.92	2.79	9.83	2.81	9.74	2.82	9.57	2.85	9.42	2.88
							7	11.35	2.81	11.11	2.85	10.89	2.89	10.82	2.90	10.69	2.92	10.52	2.95	10.36	2.98
							10	12.34	2.90	12.09	2.94	11.86	2.98	11.76	3.00	11.65	3.02	11.47	3.05	11.31	3.08
							15	13.58	3.02	13.31	3.06	13.07	3.10	12.96	3.12	12.86	3.14	12.66	3.18	12.48	3.21
2000	2000	5000	5000		14000	140%	-15	6.22	2.30	6.02	2.33	5.85	2.36	5.77	2.38	5.70	2.39	5.57	2.41	5.46	2.43
							-10	7.45	2.42	7.24	2.45	7.06	2.49	6.97	2.50	6.89	2.51	6.75	2.54	6.63	2.56
							-5	8.68	2.54	8.46	2.57	8.27	2.61	8.18	2.62	8.09	2.64	7.94	2.67	7.81	2.69
							0	9.91	2.66	9.68	2.70	9.48	2.73	9.38	2.75	9.29	2.76	9.13	2.79	8.99	2.82
							2	10.41	2.70	10.17	2.74	9.96	2.78	9.86	2.80	9.77	2.81	9.60	2.84	9.46	2.87
							7	11.40	2.80	11.15	2.84	10.93	2.88	10.86	2.89	10.73	2.91	10.56	2.94	10.40	2.97
							10	12.39	2.89	12.14	2.93	11.91	2.97	11.80	2.99	11.70	3.01	11.51	3.04	11.35	3.07
							15	13.63	3.01	13.36	3.05	13.12	3.09	13.01	3.11	12.90	3.13	12.71	3.16	12.53	3.19
2000	2000	5000	6800		15800	158%	-15	6.30	2.35	6.10	2.39	5.92	2.42	5.85	2.43	5.77	2.45	5.64	2.47	5.53	2.49
							-10	7.54	2.48	7.33	2.51	7.15	2.55	7.06	2.56	6.98	2.58	6.84	2.60	6.72	2.62
							-5	8.79	2.60	8.57	2.64	8.37	2.67	8.28	2.69	8.20	2.70	8.04	2.73	7.91	2.75
							0	10.04	2.72	9.81	2.76	9.60	2.80	9.50	2.81	9.41	2.83	9.25	2.86	9.10	2.89
							2	10.54	2.77	10.30	2.81	10.09	2.85	9.99	2.86	9.90	2.88	9.73	2.91	9.58	2.94
							7	11.54	2.86	11.30	2.91	11.07	2.95	11.00	2.96	10.87	2.98	10.69	3.01	10.54	3.04
							10	12.55	2.96	12.29	3.00	12.06	3.04	11.95	3.06	11.85	3.08	11.66	3.11	11.49	3.14
							15	13.80	3.08	13.54	3.12	13.29	3.17	13.18	3.19	13.07	3.21	12.87	3.24	12.69	3.27
2000	2500	2500	2500		9500	95%	-15	5.64	2.16	5.47	2.19	5.31	2.22	5.24	2.24	5.17	2.25	5.06	2.27	4.96	2.29
							-10	6.76	2.28	6.57	2.31	6.41	2.34	6.33	2.35	6.26	2.37	6.13	2.39	6.02	2.41
							-5	7.88	2.39	7.68	2.42	7.50	2.46	7.42	2.47	7.35	2.48	7.21	2.51	7.09	2.53
							0	9.00	2.50	8.79	2.54	8.60	2.57	8.52	2.59	8.44	2.60	8.29	2.63	8.16	2.65
							2	9.45	2.54	9.24	2.58	9.04	2.62	8.96	2.63	8.87	2.65	8.72	2.67	8.59	2.70
							7	10.35	2.63	10.13	2.67	9.93	2.71	9.86	2.72	9.75	2.74	9.59	2.77	9.44	2.79
							10	11.25	2.72	11.02	2.76	10.81	2.80	10.71	2.82	10.62	2.83	10.45	2.86	10.30	2.89
							15	12.37	2.83	12.13	2.87	11.91	2.91	11.81	2.93	11.72	2.95	11.54	2.98	11.38	3.01
2000	2500	2500	3500		10500	105%	-15	5.68	2.20	5.51	2.23	5.35	2.26	5.28	2.28	5.21	2.29	5.09	2.31	4.99	2.33
							-10	6.81	2.32	6.62	2.35	6.45	2.38	6.38	2.40	6.30	2.41	6.17	2.43	6.07	2.45
							-5	7.94	2.43	7.74	2.47	7.56	2.50	7.48	2.52	7.40	2.53	7.26	2.56	7.14	2.58
							0	9.06	2.55	8.85	2.58	8.67	2.62	8.58	2.63	8.50	2.65	8.35	2.68	8.22	2.70
							2	9.52	2.59	9.30	2.63	9.11	2.66	9.02	2.68	8.94	2.70	8.78	2.72	8.65	2.75
							7	10.42	2.68	10.20	2.72	10.00	2.76	9.93	2.77	9.81	2.79	9.65	2.82	9.51	2.85
							10	11.33	2.77	11.10	2.81	10.89	2.85	10.79	2.87	10.70	2.88	10.53	2.91	10.38	2.94
							15	12.46	2.88	12.22	2.92	12.00	2.96	11.90	2.98	11.80	3.00	11.62	3.03	11.46	3.06
2000	2500	2500	5000		12000	120%	-15	6.11	2.25	5.92	2.28	5.75	2.31	5.67	2.33	5.60	2.34	5.48	2.36	5.37	2.38
							-10	7.32	2.37	7.12	2.40	6.94	2.43	6.86	2.45	6.78	2.46	6.64	2.49	6.52	2.51
							-5	8.54	2.48	8.32	2.52	8.13	2.55	8.04	2.57	7.96	2.58	7.81	2.61	7.68	2.63
							0	9.75	2.60	9.52	2.64	9.32	2.67	9.23	2.69	9.14	2.71	8.98	2.73	8.84	2.76
							2	10.23	2.65	10.00	2.69	9.80	2.72	9.70	2.74	9.61	2.75	9.45	2.78	9.30	2.81
							7	11.21	2.74	10.97	2.78	10.75	2.82	10.68	2.83	10.56	2.85	10.38	2.88	10.23	2.91
							10	12.18	2.83	11.93	2.87	11.71	2.91	11.60	2.93	11.50	2.95	11.32	2.98	11.16	3.01
							15	13.40	2.94	13.14	2.99	12.91	3.03	12.79	3.05	12.69	3.07	12.50	3.10	12.32	3.13
2000	2500	2500	6800		13800	138%	-15	6.22	2.34	6.02	2.37	5.85	2.40	5.77	2.42	5.70	2.43	5.57	2.45	5.46	2.47
							-10	7.45	2.46	7.24	2.50	7.06	2.53	6.97	2.54	6.89	2.56	6.75	2.58	6.63	2.61
							-5	8.68	2.58	8.46	2.62	8.27	2.65	8.18	2.67	8.09	2.69	7.94	2.71	7.81	2.74
							0	9.91	2.70	9.68	2.74	9.48	2.78	9.38	2.80	9.29	2.81	9.13	2.84	8.99	2.87
							2	10.41	2.75	10.17	2.79	9.96	2.83	9.86	2.85	9.77	2.86	9.60	2.89	9.46	2.92
							7	11.40	2.84	11.15	2.89	10.93	2.93	10.86	2.94	10.73	2.96	10.56	2.99	10.40	3.02
							10	12.39	2.94	12.14	2.98	11.91	3.02	11.80	3.04	11.70	3.06	11.51	3.09	11.35	3.12
							15	13.63	3.06	13.36	3.10	13.12	3.15	13.01	3.17	12.90	3.18	12.71	3.22	12.53	3.25
2000	2500	3500	3500		11500	115%	-15	5.72	2.17	5.54	2.20	5.38	2.23	5.31	2.24	5.24	2.26	5.12	2.28	5.02	2.30
							-10	6.85	2.28	6.66	2.32	6.49	2.35	6.41	2.36	6.34	2.38	6.21	2.40	6.10	2.42
							-5	7.98	2.40	7.78	2.43	7.60	2.46	7.52	2.48	7.44	2.49	7.30	2.52	7.18	2.54
							0	9.12	2.51	8.91	2.55	8.72	2.58	8.63	2.60	8.55	2.61	8.40	2.64	8.27	2.66
							2	9.57	2.55	9.36	2.59	9.16	2.63	9.07	2.64	8.99	2.66	8.83	2.68	8.70	2.71
							7	10.48	2.64	10.26	2.68	10.06	2.72	9.99	2.73	9.87	2.75	9.71	2.78	9.57	2.80
							10	11.39	2.73	11.16	2.77	10.95	2.81	10.85	2.83	10.76	2.84	10.59	2.87	10.44	2.90
							15	12.54	2.84	12.29	2.88	12.07	2.92	11.97	2.94	11.87	2.96	11.69	2.99	11.53	3.02

* All figures comply with EN14511

1. Cooling capacity is based on 27°CDB / 19°CWB (indoor temperature), 35°CDB (outdoor temperature).
2. Heating capacity is based on 20°CDB (indoor temperature), 7°CDB/6°CWB (outdoor temperature).
3. Capacities are based on the following conditions : - Corresponding refrigerant piping length : 5m / - Level difference : 0m
4. The total ability of connected a indoor unit is up to 17.3kW
5. It is impossible to connect the indoor unit for one room only.
6. This data is reference data for temperature capacity trend.

2) Heating

HEATING

Combination (Capacity Index)					Combination (Total)	Combination (%)	Outdoor Temperature (°C, DB)	Indoor Temperature(°C, WB)													
								14		16		18		20		21		22		24	
								TC(kW)	PI(kW)	TC(kW)	PI(kW)	TC(kW)	PI(kW)	TC(kW)	PI(kW)	TC(kW)	PI(kW)	TC(kW)	PI(kW)	TC(kW)	PI(kW)
2000	2500	3500	5000		13000	130%	-15	6.17	2.26	5.97	2.29	5.80	2.32	5.72	2.33	5.65	2.35	5.52	2.37	5.42	2.39
							-10	7.39	2.38	7.18	2.41	7.00	2.44	6.91	2.46	6.84	2.47	6.70	2.50	6.58	2.52
							-5	8.61	2.49	8.39	2.53	8.20	2.56	8.11	2.58	8.02	2.59	7.87	2.62	7.75	2.64
							0	9.83	2.61	9.60	2.65	9.40	2.68	9.30	2.70	9.21	2.72	9.05	2.74	8.91	2.77
							2	10.32	2.66	10.09	2.70	9.88	2.73	9.78	2.75	9.69	2.76	9.52	2.79	9.38	2.82
							7	11.30	2.75	11.06	2.79	10.84	2.83	10.77	2.84	10.65	2.86	10.47	2.89	10.32	2.92
							10	12.28	2.84	12.03	2.88	11.81	2.92	11.70	2.94	11.60	2.96	11.42	2.99	11.25	3.02
							15	13.51	2.95	13.25	3.00	13.01	3.04	12.90	3.06	12.80	3.08	12.60	3.11	12.43	3.14
2000	2500	3500	6800		14800	148%	-15	6.30	2.34	6.10	2.37	5.92	2.40	5.85	2.42	5.77	2.43	5.64	2.45	5.53	2.47
							-10	7.54	2.46	7.33	2.50	7.15	2.53	7.06	2.54	6.98	2.56	6.84	2.58	6.72	2.61
							-5	8.79	2.58	8.57	2.62	8.37	2.65	8.28	2.67	8.20	2.69	8.04	2.71	7.91	2.74
							0	10.04	2.70	9.81	2.74	9.60	2.78	9.50	2.80	9.41	2.81	9.25	2.84	9.10	2.87
							2	10.54	2.75	10.30	2.79	10.09	2.83	9.99	2.85	9.90	2.86	9.73	2.89	9.58	2.92
							7	11.54	2.84	11.30	2.89	11.07	2.93	11.00	2.94	10.87	2.96	10.69	2.99	10.54	3.02
							10	12.55	2.94	12.29	2.98	12.06	3.02	11.95	3.04	11.85	3.06	11.66	3.09	11.49	3.12
							15	13.80	3.06	13.54	3.10	13.29	3.15	13.18	3.17	13.07	3.18	12.87	3.22	12.69	3.25
2000	2500	5000	5000		14500	145%	-15	6.30	2.34	6.10	2.37	5.92	2.40	5.85	2.42	5.77	2.43	5.64	2.45	5.53	2.47
							-10	7.54	2.46	7.33	2.50	7.15	2.53	7.06	2.54	6.98	2.56	6.84	2.58	6.72	2.61
							-5	8.79	2.58	8.57	2.62	8.37	2.65	8.28	2.67	8.20	2.69	8.04	2.71	7.91	2.74
							0	10.04	2.70	9.81	2.74	9.60	2.78	9.50	2.80	9.41	2.81	9.25	2.84	9.10	2.87
							2	10.54	2.75	10.30	2.79	10.09	2.83	9.99	2.85	9.90	2.86	9.73	2.89	9.58	2.92
							7	11.54	2.84	11.30	2.89	11.07	2.93	11.00	2.94	10.87	2.96	10.69	2.99	10.54	3.02
							10	12.55	2.94	12.29	2.98	12.06	3.02	11.95	3.04	11.85	3.06	11.66	3.09	11.49	3.12
							15	13.80	3.06	13.54	3.10	13.29	3.15	13.18	3.17	13.07	3.18	12.87	3.22	12.69	3.25
2000	2500	5000	6800		16300	163%	-15	6.30	2.39	6.10	2.42	5.92	2.45	5.85	2.47	5.77	2.48	5.64	2.50	5.53	2.52
							-10	7.54	2.51	7.33	2.55	7.15	2.58	7.06	2.60	6.98	2.61	6.84	2.64	6.72	2.66
							-5	8.79	2.63	8.57	2.67	8.37	2.71	8.28	2.72	8.20	2.74	8.04	2.77	7.91	2.79
							0	10.04	2.76	9.81	2.80	9.60	2.84	9.50	2.85	9.41	2.87	9.25	2.90	9.10	2.92
							2	10.54	2.81	10.30	2.85	10.09	2.89	9.99	2.90	9.90	2.92	9.73	2.95	9.58	2.98
							7	11.54	2.90	11.30	2.95	11.07	2.99	11.00	3.00	10.87	3.02	10.69	3.05	10.54	3.08
							10	12.55	3.00	12.29	3.04	12.06	3.09	11.95	3.10	11.85	3.12	11.66	3.16	11.49	3.19
							15	13.80	3.12	13.54	3.17	13.29	3.21	13.18	3.23	13.07	3.25	12.87	3.28	12.69	3.32
2000	3500	3500	3500		12500	125%	-15	5.75	2.21	5.57	2.24	5.41	2.27	5.34	2.29	5.27	2.30	5.15	2.32	5.05	2.34
							-10	6.89	2.33	6.70	2.36	6.53	2.39	6.45	2.41	6.38	2.42	6.25	2.44	6.14	2.46
							-5	8.03	2.44	7.83	2.48	7.65	2.51	7.57	2.52	7.49	2.54	7.35	2.56	7.23	2.59
							0	9.17	2.55	8.96	2.59	8.77	2.63	8.68	2.64	8.60	2.66	8.45	2.69	8.32	2.71
							2	9.63	2.60	9.41	2.64	9.22	2.67	9.13	2.69	9.04	2.71	8.89	2.73	8.75	2.76
							7	10.55	2.69	10.32	2.73	10.12	2.77	10.05	2.78	9.93	2.80	9.77	2.83	9.63	2.86
							10	11.46	2.78	11.23	2.82	11.02	2.86	10.92	2.88	10.82	2.89	10.65	2.93	10.50	2.95
							15	12.61	2.89	12.37	2.93	12.14	2.97	12.04	2.99	11.94	3.01	11.76	3.04	11.60	3.07
2000	3500	3500	5000		14000	140%	-15	6.19	2.29	6.00	2.32	5.83	2.35	5.75	2.37	5.68	2.38	5.55	2.40	5.44	2.42
							-10	7.42	2.41	7.21	2.45	7.03	2.48	6.95	2.49	6.87	2.51	6.73	2.53	6.61	2.55
							-5	8.65	2.53	8.43	2.57	8.23	2.60	8.15	2.62	8.06	2.63	7.91	2.66	7.78	2.68
							0	9.88	2.65	9.65	2.69	9.44	2.72	9.35	2.74	9.26	2.75	9.09	2.78	8.95	2.81
							2	10.37	2.69	10.14	2.73	9.92	2.77	9.83	2.79	9.74	2.80	9.57	2.83	9.42	2.86
							7	11.35	2.79	11.11	2.83	10.89	2.87	10.82	2.88	10.69	2.90	10.52	2.93	10.36	2.96
							10	12.34	2.88	12.09	2.92	11.86	2.96	11.76	2.98	11.65	3.00	11.47	3.03	11.31	3.06
							15	13.58	3.00	13.31	3.04	13.07	3.08	12.96	3.10	12.86	3.12	12.66	3.15	12.48	3.18
2000	3500	3500	6800		15800	158%	-15	6.30	2.35	6.10	2.38	5.92	2.41	5.85	2.43	5.77	2.44	5.64	2.46	5.53	2.48
							-10	7.54	2.47	7.33	2.50	7.15	2.54	7.06	2.55	6.98	2.57	6.84	2.59	6.72	2.61
							-5	8.79	2.59	8.57	2.63	8.37	2.66	8.28	2.68	8.20	2.69	8.04	2.72	7.91	2.75
							0	10.04	2.71	9.81	2.75	9.60	2.79	9.50	2.80	9.41	2.82	9.25	2.85	9.10	2.88
							2	10.54	2.76	10.30	2.80	10.09	2.84	9.99	2.85	9.90	2.87	9.73	2.90	9.58	2.93
							7	11.54	2.85	11.30	2.90	11.07	2.94	11.00	2.95	10.87	2.97	10.69	3.00	10.54	3.03
							10	12.55	2.95	12.29	2.99	12.06	3.03	11.95	3.05	11.85	3.07	11.66	3.10	11.49	3.13
							15	13.80	3.07	13.54	3.11	13.29	3.16	13.18	3.18	13.07	3.19	12.87	3.23	12.69	3.26
2000	3500	5000	5000		15500	155%	-15	6.30	2.34	6.10	2.37	5.92	2.40	5.85	2.42	5.77	2.43	5.64	2.45	5.53	2.47
							-10	7.54	2.46	7.33	2.50	7.15	2.53	7.06	2.54	6.98	2.56	6.84	2.58	6.72	2.61
							-5	8.79	2.58	8.57	2.62	8.37	2.65	8.28	2.67	8.20	2.69	8.04	2.71	7.91	2.74
							0	10.04	2.70	9.81	2.74	9.60	2.78	9.50	2.80	9.41	2.81	9.25	2.84	9.10	2.87
							2	10.54	2.75	10.30	2.79	10.09	2.83	9.99	2.85	9.90	2.86	9.73	2.89	9.58	2.92
							7	11.54	2.84	11.30	2.89	11.07	2.93	11.00	2.94	10.87	2.96	10.69	2.99	10.54	3.02
							10	12.55	2.94	12.29	2.98	12.06	3.02	11.95	3.04	11.85	3.06	11.66	3.09	11.49	3.12
							15	13.80	3.06	13.54	3.10	13.29	3.15	13.18	3.17	13.07	3.18	12.87	3.22	12.69	3.25
2000	3500	5000	6800		17300	173%	-15	6.30	2.42	6.10	2.46	5.92	2.49	5.85	2.51	5.77	2.52	5.64	2.55	5.53	2.57
							-10	7.54	2.55	7.33	2.59	7.15	2.62	7.06	2.64	6.98	2.65	6.84	2.68	6.72	2.70
							-5	8.79	2.68	8.57	2.72	8.37	2.75	8.28	2.77	8.20	2.79	8.04	2.81	7.91	2.84
							0	10.04	2.80	9.81	2.84	9.60	2.88	9.50	2.90	9.41	2.92	9.25	2.95	9.10	2.97
							2	10.54	2.85	10.30	2.89	10.09	2.93	9.99	2.95	9.90	2.97	9.73	3.00	9.58	3.03
							7	11.54	2.95	11.30	3.00	11.07	3.04	11.00	3.05	10.87	3.07	10.69	3.10	10.54	3.13
							10	12.55	3.05	12.29	3.10	12.06	3.14	11.95	3.16	11.85	3.18	11.66	3.21	11.49	3.24
							15	13.80	3.17	13.54	3.22	13.29	3.26	13.18	3.28	13.07	3.30	12.87	3.34	12.69	3.37

* All figures comply with EN14511

1. Cooling capacity is based on 27°CDB / 19°CWB (indoor temperature), 35°CDB (outdoor temperature).
2. Heating capacity is based on 20°CDB (indoor temperature), 7°CDB/6°CWB (outdoor temperature).
3. Capacities are based on the following conditions : - Corresponding refrigerant piping length : 5m / - Level difference : 0m
4. The total ability of connected a indoor unit is up to 17.3kW
5. It is impossible to connect the indoor unit for one room only.
6. This data is reference data for temperature capacity trend.

7 AJ100FCJ5EH

2) Heating

HEATING

Combination (Capacity Index)					Combination (Total)	Combination (%)	Outdoor Temperature (°C, DB)	Indoor Temperature(°C, WB)													
								14		16		18		20		21		22		24	
								TC(kW)	PI(kW)	TC(kW)	PI(kW)	TC(kW)	PI(kW)	TC(kW)	PI(kW)	TC(kW)	PI(kW)	TC(kW)	PI(kW)	TC(kW)	PI(kW)
2000	5000	5000	5000		17000	170%	-15	6.30	2.42	6.10	2.46	5.92	2.49	5.85	2.51	5.77	2.52	5.64	2.55	5.53	2.57
							-10	7.54	2.55	7.33	2.59	7.15	2.62	7.06	2.64	6.98	2.65	6.84	2.68	6.72	2.70
							-5	8.79	2.68	8.57	2.72	8.37	2.75	8.28	2.77	8.20	2.79	8.04	2.81	7.91	2.84
							0	10.04	2.80	9.81	2.84	9.60	2.88	9.50	2.90	9.41	2.92	9.25	2.95	9.10	2.97
							2	10.54	2.85	10.30	2.89	10.09	2.93	9.99	2.95	9.90	2.97	9.73	3.00	9.58	3.03
							7	11.54	2.95	11.30	3.00	11.07	3.04	11.00	3.05	10.87	3.07	10.69	3.10	10.54	3.13
							10	12.55	3.05	12.29	3.10	12.06	3.14	11.95	3.16	11.85	3.18	11.66	3.21	11.49	3.24
							15	13.80	3.17	13.54	3.22	13.29	3.26	13.18	3.28	13.07	3.30	12.87	3.34	12.69	3.37
2500	2500	2500	2500		10000	100%	-15	5.70	2.23	5.52	2.27	5.36	2.30	5.29	2.31	5.23	2.32	5.11	2.35	5.01	2.36
							-10	6.83	2.35	6.64	2.39	6.47	2.42	6.39	2.43	6.32	2.44	6.19	2.47	6.08	2.49
							-5	7.96	2.47	7.76	2.50	7.58	2.54	7.50	2.55	7.42	2.57	7.28	2.59	7.16	2.61
							0	9.09	2.58	8.88	2.62	8.69	2.66	8.60	2.67	8.52	2.69	8.37	2.71	8.24	2.74
							2	9.54	2.63	9.33	2.67	9.14	2.70	9.05	2.72	8.96	2.73	8.81	2.76	8.67	2.79
							7	10.45	2.72	10.23	2.76	10.03	2.80	9.96	2.81	9.84	2.83	9.68	2.86	9.54	2.89
							10	11.36	2.81	11.13	2.85	10.92	2.89	10.82	2.91	10.73	2.93	10.56	2.96	10.41	2.98
							15	12.50	2.92	12.26	2.97	12.04	3.01	11.93	3.03	11.83	3.04	11.65	3.08	11.49	3.11
2500	2500	2500	3500		11000	110%	-15	5.74	2.20	5.56	2.23	5.40	2.26	5.32	2.28	5.26	2.29	5.14	2.31	5.04	2.33
							-10	6.87	2.32	6.68	2.35	6.51	2.38	6.43	2.40	6.36	2.41	6.23	2.43	6.12	2.45
							-5	8.01	2.43	7.81	2.47	7.63	2.50	7.54	2.52	7.47	2.53	7.33	2.56	7.21	2.58
							0	9.15	2.55	8.93	2.58	8.74	2.62	8.66	2.63	8.57	2.65	8.42	2.68	8.29	2.70
							2	9.60	2.59	9.39	2.63	9.19	2.66	9.10	2.68	9.02	2.70	8.86	2.72	8.73	2.75
							7	10.51	2.68	10.29	2.72	10.09	2.76	10.02	2.77	9.90	2.79	9.74	2.82	9.60	2.85
							10	11.43	2.77	11.20	2.81	10.98	2.85	10.89	2.87	10.79	2.88	10.62	2.91	10.47	2.94
							15	12.57	2.88	12.33	2.92	12.11	2.96	12.00	2.98	11.91	3.00	11.72	3.03	11.56	3.06
2500	2500	2500	5000		12500	125%	-15	6.18	2.28	5.99	2.32	5.82	2.35	5.74	2.36	5.67	2.37	5.54	2.40	5.43	2.41
							-10	7.41	2.40	7.20	2.44	7.02	2.47	6.93	2.48	6.86	2.50	6.72	2.52	6.60	2.54
							-5	8.63	2.52	8.41	2.56	8.22	2.59	8.13	2.61	8.05	2.62	7.90	2.65	7.77	2.67
							0	9.86	2.64	9.63	2.68	9.42	2.71	9.33	2.73	9.24	2.74	9.08	2.77	8.94	2.80
							2	10.35	2.68	10.12	2.72	9.91	2.76	9.81	2.78	9.72	2.79	9.55	2.82	9.41	2.85
							7	11.33	2.78	11.09	2.82	10.87	2.86	10.80	2.87	10.67	2.89	10.50	2.92	10.35	2.95
							10	12.32	2.87	12.07	2.91	11.84	2.95	11.73	2.97	11.63	2.99	11.45	3.02	11.29	3.05
							15	13.55	2.98	13.29	3.03	13.05	3.07	12.94	3.09	12.83	3.11	12.64	3.14	12.46	3.17
2500	2500	2500	6800		14300	143%	-15	6.30	2.34	6.10	2.37	5.92	2.40	5.85	2.42	5.77	2.43	5.64	2.45	5.53	2.47
							-10	7.54	2.46	7.33	2.50	7.15	2.53	7.06	2.54	6.98	2.56	6.84	2.58	6.72	2.61
							-5	8.79	2.58	8.57	2.62	8.37	2.65	8.28	2.67	8.20	2.69	8.04	2.71	7.91	2.74
							0	10.04	2.70	9.81	2.74	9.60	2.78	9.50	2.80	9.41	2.81	9.25	2.84	9.10	2.87
							2	10.54	2.75	10.30	2.79	10.09	2.83	9.99	2.85	9.90	2.86	9.73	2.89	9.58	2.92
							7	11.54	2.84	11.30	2.89	11.07	2.93	11.00	2.94	10.87	2.96	10.69	2.99	10.54	3.02
							10	12.55	2.94	12.29	2.98	12.06	3.02	11.95	3.04	11.85	3.06	11.66	3.09	11.49	3.12
							15	13.80	3.06	13.54	3.10	13.29	3.15	13.18	3.17	13.07	3.18	12.87	3.22	12.69	3.25
2500	2500	3500	3500		12000	120%	-15	6.10	2.24	5.91	2.28	5.74	2.30	5.66	2.32	5.59	2.33	5.47	2.35	5.36	2.37
							-10	7.31	2.36	7.11	2.39	6.93	2.43	6.84	2.44	6.77	2.45	6.63	2.48	6.51	2.50
							-5	8.52	2.48	8.31	2.51	8.11	2.55	8.03	2.56	7.94	2.58	7.79	2.60	7.67	2.62
							0	9.73	2.59	9.51	2.63	9.30	2.66	9.21	2.68	9.12	2.70	8.96	2.72	8.82	2.75
							2	10.22	2.64	9.99	2.68	9.78	2.71	9.68	2.73	9.59	2.74	9.43	2.77	9.28	2.80
							7	11.19	2.73	10.95	2.77	10.73	2.81	10.66	2.82	10.54	2.84	10.36	2.87	10.21	2.90
							10	12.16	2.82	11.91	2.86	11.69	2.90	11.58	2.92	11.48	2.94	11.30	2.97	11.14	3.00
							15	13.38	2.93	13.12	2.98	12.88	3.02	12.77	3.04	12.67	3.05	12.47	3.09	12.30	3.12
2500	2500	3500	5000		13500	135%	-15	6.22	2.32	6.03	2.36	5.85	2.39	5.78	2.40	5.70	2.41	5.57	2.44	5.47	2.46
							-10	7.45	2.44	7.25	2.48	7.06	2.51	6.98	2.53	6.90	2.54	6.76	2.57	6.64	2.59
							-5	8.69	2.56	8.47	2.60	8.27	2.64	8.18	2.65	8.10	2.67	7.95	2.69	7.82	2.72
							0	9.92	2.68	9.69	2.72	9.49	2.76	9.39	2.78	9.30	2.79	9.14	2.82	9.00	2.85
							2	10.42	2.73	10.18	2.77	9.97	2.81	9.87	2.83	9.78	2.84	9.61	2.87	9.47	2.90
							7	11.41	2.83	11.16	2.87	10.94	2.91	10.87	2.92	10.74	2.94	10.57	2.97	10.41	3.00
							10	12.40	2.92	12.15	2.96	11.92	3.00	11.81	3.02	11.71	3.04	11.52	3.07	11.36	3.10
							15	13.64	3.04	13.38	3.08	13.13	3.12	13.02	3.14	12.92	3.16	12.72	3.20	12.54	3.23
2500	2500	3500	6800		15300	153%	-15	6.30	2.38	6.10	2.41	5.92	2.44	5.85	2.46	5.77	2.47	5.64	2.50	5.53	2.52
							-10	7.54	2.50	7.33	2.54	7.15	2.57	7.06	2.59	6.98	2.60	6.84	2.63	6.72	2.65
							-5	8.79	2.62	8.57	2.66	8.37	2.70	8.28	2.72	8.20	2.73	8.04	2.76	7.91	2.78
							0	10.04	2.75	9.81	2.79	9.60	2.83	9.50	2.84	9.41	2.86	9.25	2.89	9.10	2.91
							2	10.54	2.80	10.30	2.84	10.09	2.88	9.99	2.89	9.90	2.91	9.73	2.94	9.58	2.97
							7	11.54	2.89	11.30	2.94	11.07	2.98	11.00	2.99	10.87	3.01	10.69	3.04	10.54	3.07
							10	12.55	2.99	12.29	3.03	12.06	3.08	11.95	3.09	11.85	3.11	11.66	3.15	11.49	3.18
							15	13.80	3.11	13.54	3.16	13.29	3.20	13.18	3.22	13.07	3.24	12.87	3.27	12.69	3.31
2500	2500	5000	5000		15000	150%	-15	6.30	2.37	6.10	2.40	5.92	2.44	5.85	2.45	5.77	2.46	5.64	2.49	5.53	2.51
							-10	7.54	2.49	7.33	2.53	7.15	2.56	7.06	2.58	6.98	2.59	6.84	2.62	6.72	2.64
							-5	8.79	2.62	8.57	2.66	8.37	2.69	8.28	2.71	8.20	2.72	8.04	2.75	7.91	2.77
							0	10.04	2.74	9.81	2.78	9.60	2.82	9.50	2.83	9.41	2.85	9.25	2.88	9.10	2.90
							2	10.54	2.79	10.30	2.83	10.09	2.87	9.99	2.88	9.90	2.90	9.73	2.93	9.58	2.96
							7	11.54	2.88	11.30	2.93	11.07	2.97	11.00	2.98	10.87	3.00	10.69	3.03	10.54	3.06
							10	12.55	2.98	12.29	3.02	12.06	3.07	11.95	3.08	11.85	3.10	11.66	3.14	11.49	3.17
							15	13.80	3.10	13.54	3.15	13.29	3.19	13.18	3.21	13.07	3.23	12.87	3.26	12.69	3.29

* All figures comply with EN14511

1. Cooling capacity is based on 27°CDB / 19°CWB (indoor temperature), 35°CDB (outdoor temperature).
2. Heating capacity is based on 20°CDB (indoor temperature), 7°CDB/6°CWB (outdoor temperature).
3. Capacities are based on the following conditions : - Corresponding refrigerant piping length : 5m / - Level difference : 0m
4. The total ability of connected a indoor unit is up to 17.3kW
5. It is impossible to connect the indoor unit for one room only.
6. This data is reference data for temperature capacity trend.

2) Heating

HEATING

Combination (Capacity Index)					Combination (Total)	Combination (%)	Outdoor Temperature (°C, DB)	Indoor Temperature(°C, WB)													
								14		16		18		20		21		22		24	
								TC(kW)	PI(kW)	TC(kW)	PI(kW)	TC(kW)	PI(kW)	TC(kW)	PI(kW)	TC(kW)	PI(kW)	TC(kW)	PI(kW)	TC(kW)	PI(kW)
2500	2500	5000	6800		16800	168%	-15	6.30	2.46	6.10	2.49	5.92	2.53	5.85	2.54	5.77	2.55	5.64	2.58	5.53	2.60
							-10	7.54	2.59	7.33	2.62	7.15	2.66	7.06	2.67	6.98	2.69	6.84	2.72	6.72	2.74
							-5	8.79	2.71	8.57	2.75	8.37	2.79	8.28	2.81	8.20	2.82	8.04	2.85	7.91	2.88
							0	10.04	2.84	9.81	2.88	9.60	2.92	9.50	2.94	9.41	2.95	9.25	2.99	9.10	3.01
							2	10.54	2.89	10.30	2.93	10.09	2.97	9.99	2.99	9.90	3.01	9.73	3.04	9.58	3.07
							7	11.54	2.99	11.30	3.03	11.07	3.08	11.00	3.09	10.87	3.11	10.69	3.15	10.54	3.17
							10	12.55	3.09	12.29	3.14	12.06	3.18	11.95	3.20	11.85	3.22	11.66	3.25	11.49	3.28
							15	13.80	3.21	13.54	3.26	13.29	3.31	13.18	3.33	13.07	3.35	12.87	3.38	12.69	3.42
2500	3500	3500	3500		13000	130%	-15	6.15	2.25	5.96	2.28	5.79	2.31	5.71	2.33	5.64	2.34	5.51	2.36	5.41	2.38
							-10	7.37	2.37	7.17	2.40	6.98	2.43	6.90	2.45	6.82	2.46	6.68	2.49	6.57	2.51
							-5	8.59	2.48	8.38	2.52	8.18	2.55	8.09	2.57	8.01	2.58	7.86	2.61	7.73	2.63
							0	9.81	2.60	9.59	2.64	9.38	2.67	9.29	2.69	9.20	2.71	9.04	2.73	8.90	2.76
							2	10.30	2.65	10.07	2.69	9.86	2.72	9.76	2.74	9.67	2.75	9.51	2.78	9.36	2.81
							7	11.28	2.74	11.04	2.78	10.82	2.82	10.75	2.83	10.63	2.85	10.45	2.88	10.30	2.91
							10	12.26	2.83	12.01	2.87	11.78	2.91	11.68	2.93	11.58	2.95	11.39	2.98	11.23	3.01
							15	13.49	2.94	13.23	2.99	12.99	3.03	12.88	3.05	12.77	3.07	12.58	3.10	12.40	3.13
2500	3500	3500	5000		14500	145%	-15	6.30	2.33	6.10	2.36	5.92	2.39	5.85	2.41	5.77	2.42	5.64	2.45	5.53	2.46
							-10	7.54	2.45	7.33	2.49	7.15	2.52	7.06	2.54	6.98	2.55	6.84	2.57	6.72	2.60
							-5	8.79	2.57	8.57	2.61	8.37	2.65	8.28	2.66	8.20	2.68	8.04	2.70	7.91	2.73
							0	10.04	2.69	9.81	2.73	9.60	2.77	9.50	2.79	9.41	2.80	9.25	2.83	9.10	2.86
							2	10.54	2.74	10.30	2.78	10.09	2.82	9.99	2.84	9.90	2.85	9.73	2.88	9.58	2.91
							7	11.54	2.84	11.30	2.88	11.07	2.92	11.00	2.93	10.87	2.95	10.69	2.98	10.54	3.01
							10	12.55	2.93	12.29	2.97	12.06	3.01	11.95	3.03	11.85	3.05	11.66	3.08	11.49	3.11
							15	13.80	3.05	13.54	3.09	13.29	3.13	13.18	3.15	13.07	3.17	12.87	3.21	12.69	3.24
2500	3500	3500	6800		16300	163%	-15	6.30	2.38	6.10	2.41	5.92	2.44	5.85	2.46	5.77	2.47	5.64	2.50	5.53	2.52
							-10	7.54	2.50	7.33	2.54	7.15	2.57	7.06	2.59	6.98	2.60	6.84	2.63	6.72	2.65
							-5	8.79	2.62	8.57	2.66	8.37	2.70	8.28	2.72	8.20	2.73	8.04	2.76	7.91	2.78
							0	10.04	2.75	9.81	2.79	9.60	2.83	9.50	2.84	9.41	2.86	9.25	2.89	9.10	2.91
							2	10.54	2.80	10.30	2.84	10.09	2.88	9.99	2.89	9.90	2.91	9.73	2.94	9.58	2.97
							7	11.54	2.89	11.30	2.94	11.07	2.98	11.00	2.99	10.87	3.01	10.69	3.04	10.54	3.07
							10	12.55	2.99	12.29	3.03	12.06	3.08	11.95	3.09	11.85	3.11	11.66	3.15	11.49	3.18
							15	13.80	3.11	13.54	3.16	13.29	3.20	13.18	3.22	13.07	3.24	12.87	3.27	12.69	3.31
2500	3500	5000	5000		16000	160%	-15	6.30	2.38	6.10	2.41	5.92	2.44	5.85	2.46	5.77	2.47	5.64	2.50	5.53	2.52
							-10	7.54	2.50	7.33	2.54	7.15	2.57	7.06	2.59	6.98	2.60	6.84	2.63	6.72	2.65
							-5	8.79	2.62	8.57	2.66	8.37	2.70	8.28	2.72	8.20	2.73	8.04	2.76	7.91	2.78
							0	10.04	2.75	9.81	2.79	9.60	2.83	9.50	2.84	9.41	2.86	9.25	2.89	9.10	2.91
							2	10.54	2.80	10.30	2.84	10.09	2.88	9.99	2.89	9.90	2.91	9.73	2.94	9.58	2.97
							7	11.54	2.89	11.30	2.94	11.07	2.98	11.00	2.99	10.87	3.01	10.69	3.04	10.54	3.07
							10	12.55	2.99	12.29	3.03	12.06	3.08	11.95	3.09	11.85	3.11	11.66	3.15	11.49	3.18
							15	13.80	3.11	13.54	3.16	13.29	3.20	13.18	3.22	13.07	3.24	12.87	3.27	12.69	3.31
3500	3500	3500	3500		14000	140%	-15	6.18	2.28	5.99	2.32	5.82	2.35	5.74	2.36	5.67	2.37	5.54	2.40	5.43	2.41
							-10	7.41	2.40	7.20	2.44	7.02	2.47	6.93	2.48	6.86	2.50	6.72	2.52	6.60	2.54
							-5	8.63	2.52	8.41	2.56	8.22	2.59	8.13	2.61	8.05	2.62	7.90	2.65	7.77	2.67
							0	9.86	2.64	9.63	2.68	9.42	2.71	9.33	2.73	9.24	2.74	9.08	2.77	8.94	2.80
							2	10.35	2.68	10.12	2.72	9.91	2.76	9.81	2.78	9.72	2.79	9.55	2.82	9.41	2.85
							7	11.33	2.78	11.09	2.82	10.87	2.86	10.80	2.87	10.67	2.89	10.50	2.92	10.35	2.95
							10	12.32	2.87	12.07	2.91	11.84	2.95	11.73	2.97	11.63	2.99	11.45	3.02	11.29	3.05
							15	13.55	2.98	13.29	3.03	13.05	3.07	12.94	3.09	12.83	3.11	12.64	3.14	12.46	3.17
3500	3500	3500	5000		15500	155%	-15	6.30	2.33	6.10	2.36	5.92	2.39	5.85	2.41	5.77	2.42	5.64	2.45	5.53	2.46
							-10	7.54	2.45	7.33	2.49	7.15	2.52	7.06	2.54	6.98	2.55	6.84	2.57	6.72	2.60
							-5	8.79	2.57	8.57	2.61	8.37	2.65	8.28	2.66	8.20	2.68	8.04	2.70	7.91	2.73
							0	10.04	2.69	9.81	2.73	9.60	2.77	9.50	2.79	9.41	2.80	9.25	2.83	9.10	2.86
							2	10.54	2.74	10.30	2.78	10.09	2.82	9.99	2.84	9.90	2.85	9.73	2.88	9.58	2.91
							7	11.54	2.84	11.30	2.88	11.07	2.92	11.00	2.93	10.87	2.95	10.69	2.98	10.54	3.01
							10	12.55	2.93	12.29	2.97	12.06	3.01	11.95	3.03	11.85	3.05	11.66	3.08	11.49	3.11
							15	13.80	3.05	13.54	3.09	13.29	3.13	13.18	3.15	13.07	3.17	12.87	3.21	12.69	3.24
3500	3500	3500	6800		17300	173%	-15	6.30	2.42	6.10	2.45	5.92	2.48	5.85	2.50	5.77	2.51	5.64	2.54	5.53	2.56
							-10	7.54	2.54	7.33	2.58	7.15	2.61	7.06	2.63	6.98	2.65	6.84	2.67	6.72	2.69
							-5	8.79	2.67	8.57	2.71	8.37	2.74	8.28	2.76	8.20	2.78	8.04	2.80	7.91	2.83
							0	10.04	2.79	9.81	2.84	9.60	2.87	9.50	2.89	9.41	2.91	9.25	2.94	9.10	2.96
							2	10.54	2.84	10.30	2.89	10.09	2.92	9.99	2.94	9.90	2.96	9.73	2.99	9.58	3.02
							7	11.54	2.94	11.30	2.99	11.07	3.03	11.00	3.04	10.87	3.06	10.69	3.09	10.54	3.12
							10	12.55	3.04	12.29	3.09	12.06	3.13	11.95	3.15	11.85	3.16	11.66	3.20	11.49	3.23
							15	13.80	3.16	13.54	3.21	13.29	3.25	13.18	3.27	13.07	3.29	12.87	3.33	12.69	3.36
3500	3500	5000	5000		17000	170%	-15	6.30	2.42	6.10	2.45	5.92	2.48	5.85	2.50	5.77	2.51	5.64	2.54	5.53	2.56
							-10	7.54	2.54	7.33	2.58	7.15	2.61	7.06	2.63	6.98	2.65	6.84	2.67	6.72	2.69
							-5	8.79	2.67	8.57	2.71	8.37	2.74	8.28	2.76	8.20	2.78	8.04	2.80	7.91	2.83
							0	10.04	2.79	9.81	2.84	9.60	2.87	9.50	2.89	9.41	2.91	9.25	2.94	9.10	2.96
							2	10.54	2.84	10.30	2.89	10.09	2.92	9.99	2.94	9.90	2.96	9.73	2.99	9.58	3.02
							7	11.54	2.94	11.30	2.99	11.07	3.03	11.00	3.04	10.87	3.06	10.69	3.09	10.54	3.12
							10	12.55	3.04	12.29	3.09	12.06	3.13	11.95	3.15	11.85	3.16	11.66	3.20	11.49	3.23
							15	13.80	3.16	13.54	3.21	13.29	3.25	13.18	3.27	13.07	3.29	12.87	3.33	12.69	3.36

* All figures comply with EN14511

1. Cooling capacity is based on 27°CDB / 19°CWB (indoor temperature), 35°CDB (outdoor temperature).
2. Heating capacity is based on 20°CDB (indoor temperature), 7°CDB/6°CWB (outdoor temperature).
3. Capacities are based on the following conditions : - Corresponding refrigerant piping length : 5m / - Level difference : 0m
4. The total ability of connected a indoor unit is up to 17.3kW
5. It is impossible to connect the indoor unit for one room only.
6. This data is reference data for temperature capacity trend.

7 AJ100FCJ5EH

2) Heating

HEATING

Combination (Capacity Index)					Combination (Total)	Combination (%)	Outdoor Temperature (°C, DB)	Indoor Temperature(°C, WB)													
								14		16		18		20		21		22		24	
								TC(kW)	PI(kW)	TC(kW)	PI(kW)	TC(kW)	PI(kW)	TC(kW)	PI(kW)	TC(kW)	PI(kW)	TC(kW)	PI(kW)	TC(kW)	PI(kW)
2000	2000	2000	2000	2000	10000	100%	-15	6.30	2.36	6.10	2.40	5.92	2.43	5.85	2.44	5.77	2.45	5.64	2.48	5.53	2.50
							-10	7.54	2.48	7.33	2.52	7.15	2.55	7.06	2.57	6.98	2.58	6.84	2.61	6.72	2.63
							-5	8.79	2.61	8.57	2.65	8.37	2.68	8.28	2.70	8.20	2.71	8.04	2.74	7.91	2.76
							0	10.04	2.73	9.81	2.77	9.60	2.81	9.50	2.82	9.41	2.84	9.25	2.87	9.10	2.90
							2	10.54	2.78	10.30	2.82	10.09	2.86	9.99	2.87	9.90	2.89	9.73	2.92	9.58	2.95
							7	11.54	2.87	11.30	2.92	11.07	2.96	11.00	2.97	10.87	2.99	10.69	3.02	10.54	3.05
							10	12.55	2.97	12.29	3.01	12.06	3.05	11.95	3.07	11.85	3.09	11.66	3.13	11.49	3.15
							15	13.80	3.09	13.54	3.14	13.29	3.18	13.18	3.20	13.07	3.22	12.87	3.25	12.69	3.28
2000	2000	2000	2000	2500	10500	105%	-15	6.55	2.33	6.34	2.36	6.16	2.39	6.08	2.41	6.00	2.42	5.87	2.45	5.75	2.46
							-10	7.84	2.45	7.63	2.49	7.43	2.52	7.34	2.54	7.26	2.55	7.11	2.57	6.99	2.60
							-5	9.14	2.57	8.91	2.61	8.71	2.65	8.61	2.66	8.52	2.68	8.36	2.70	8.23	2.73
							0	10.44	2.69	10.20	2.73	9.98	2.77	9.88	2.79	9.79	2.80	9.62	2.83	9.47	2.86
							2	10.96	2.74	10.72	2.78	10.49	2.82	10.39	2.84	10.29	2.85	10.12	2.88	9.96	2.91
							7	12.01	2.84	11.75	2.88	11.52	2.92	11.44	2.93	11.31	2.95	11.12	2.98	10.96	3.01
							10	13.05	2.93	12.78	2.97	12.54	3.01	12.43	3.03	12.32	3.05	12.13	3.08	11.95	3.11
							15	14.35	3.05	14.08	3.09	13.82	3.13	13.71	3.15	13.59	3.17	13.38	3.21	13.20	3.24
2000	2000	2000	2000	3500	11500	115%	-15	6.63	2.37	6.42	2.40	6.24	2.44	6.15	2.45	6.08	2.46	5.94	2.49	5.82	2.51
							-10	7.94	2.49	7.72	2.53	7.52	2.56	7.43	2.58	7.35	2.59	7.20	2.62	7.07	2.64
							-5	9.25	2.62	9.02	2.66	8.81	2.69	8.72	2.71	8.63	2.72	8.47	2.75	8.33	2.77
							0	10.57	2.74	10.33	2.78	10.10	2.82	10.00	2.83	9.91	2.85	9.73	2.88	9.58	2.90
							2	11.10	2.79	10.85	2.83	10.62	2.87	10.52	2.88	10.42	2.90	10.24	2.93	10.09	2.96
							7	12.15	2.88	11.89	2.93	11.66	2.97	11.58	2.98	11.45	3.00	11.26	3.03	11.09	3.06
							10	13.21	2.98	12.94	3.02	12.69	3.07	12.58	3.08	12.47	3.10	12.27	3.14	12.10	3.17
							15	14.53	3.10	14.25	3.15	13.99	3.19	13.87	3.21	13.76	3.23	13.55	3.26	13.36	3.29
2000	2000	2000	2000	5000	13000	130%	-15	6.58	2.42	6.38	2.45	6.19	2.48	6.11	2.50	6.03	2.51	5.90	2.54	5.78	2.56
							-10	7.89	2.54	7.67	2.58	7.47	2.61	7.38	2.63	7.30	2.65	7.15	2.67	7.03	2.69
							-5	9.19	2.67	8.96	2.71	8.75	2.74	8.66	2.76	8.57	2.78	8.41	2.80	8.27	2.83
							0	10.50	2.79	10.25	2.84	10.04	2.87	9.93	2.89	9.84	2.91	9.67	2.94	9.52	2.96
							2	11.02	2.84	10.77	2.89	10.55	2.92	10.45	2.94	10.35	2.96	10.17	2.99	10.02	3.02
							7	12.07	2.94	11.81	2.99	11.58	3.03	11.50	3.04	11.37	3.06	11.18	3.09	11.02	3.12
							10	13.12	3.04	12.85	3.09	12.61	3.13	12.49	3.15	12.39	3.16	12.19	3.20	12.02	3.23
							15	14.43	3.16	14.15	3.21	13.90	3.25	13.78	3.27	13.66	3.29	13.46	3.33	13.27	3.36
2000	2000	2000	2000	6800	14800	148%	-15	6.83	2.50	6.62	2.53	6.43	2.57	6.34	2.58	6.26	2.60	6.12	2.62	6.00	2.64
							-10	8.18	2.63	7.95	2.67	7.75	2.70	7.66	2.72	7.57	2.73	7.42	2.76	7.29	2.78
							-5	9.53	2.76	9.29	2.80	9.08	2.83	8.98	2.85	8.89	2.87	8.72	2.90	8.58	2.92
							0	10.89	2.89	10.64	2.93	10.41	2.97	10.31	2.99	10.21	3.00	10.03	3.03	9.87	3.06
							2	11.43	2.94	11.18	2.98	10.94	3.02	10.84	3.04	10.73	3.06	10.55	3.09	10.39	3.12
							7	12.52	3.04	12.25	3.08	12.01	3.13	11.93	3.14	11.79	3.16	11.60	3.20	11.43	3.23
							10	13.61	3.14	13.33	3.19	13.08	3.23	12.96	3.25	12.85	3.27	12.65	3.30	12.47	3.34
							15	14.97	3.27	14.68	3.31	14.42	3.36	14.29	3.38	14.17	3.40	13.96	3.44	13.77	3.47
2000	2000	2000	2500	2500	11000	110%	-15	6.70	2.40	6.49	2.44	6.31	2.47	6.22	2.48	6.14	2.50	6.00	2.52	5.89	2.54
							-10	8.03	2.53	7.81	2.56	7.61	2.60	7.52	2.61	7.43	2.63	7.28	2.65	7.15	2.68
							-5	9.36	2.65	9.12	2.69	8.91	2.73	8.82	2.74	8.72	2.76	8.56	2.79	8.42	2.81
							0	10.69	2.78	10.44	2.82	10.22	2.85	10.12	2.87	10.02	2.89	9.84	2.92	9.69	2.94
							2	11.22	2.82	10.97	2.87	10.74	2.90	10.64	2.92	10.54	2.94	10.36	2.97	10.20	3.00
							7	12.29	2.92	12.03	2.97	11.79	3.01	11.71	3.02	11.57	3.04	11.38	3.07	11.22	3.10
							10	13.36	3.02	13.08	3.06	12.84	3.11	12.72	3.13	12.61	3.14	12.41	3.18	12.24	3.21
							15	14.69	3.14	14.41	3.19	14.15	3.23	14.03	3.25	13.91	3.27	13.70	3.31	13.51	3.34
2000	2000	2000	2500	3500	12000	120%	-15	6.80	2.37	6.59	2.40	6.40	2.44	6.31	2.45	6.23	2.46	6.09	2.49	5.97	2.51
							-10	8.15	2.49	7.92	2.53	7.72	2.56	7.63	2.58	7.54	2.59	7.39	2.62	7.26	2.64
							-5	9.49	2.62	9.26	2.66	9.04	2.69	8.94	2.71	8.85	2.72	8.69	2.75	8.54	2.77
							0	10.84	2.74	10.59	2.78	10.37	2.82	10.26	2.83	10.16	2.85	9.99	2.88	9.83	2.90
							2	11.38	2.79	11.13	2.83	10.90	2.87	10.79	2.88	10.69	2.90	10.51	2.93	10.35	2.96
							7	12.47	2.88	12.20	2.93	11.96	2.97	11.88	2.98	11.74	3.00	11.55	3.03	11.38	3.06
							10	13.55	2.98	13.27	3.02	13.02	3.07	12.91	3.08	12.80	3.10	12.59	3.14	12.41	3.17
							15	14.91	3.10	14.62	3.15	14.36	3.19	14.23	3.21	14.12	3.23	13.90	3.26	13.71	3.29
2000	2000	2000	2500	5000	13500	135%	-15	6.74	2.45	6.53	2.48	6.34	2.52	6.26	2.53	6.18	2.55	6.04	2.57	5.92	2.59
							-10	8.08	2.58	7.85	2.62	7.65	2.65	7.56	2.67	7.48	2.68	7.33	2.71	7.20	2.73
							-5	9.41	2.70	9.18	2.74	8.97	2.78	8.87	2.80	8.78	2.81	8.61	2.84	8.47	2.87
							0	10.75	2.83	10.50	2.87	10.28	2.91	10.18	2.93	10.08	2.95	9.90	2.98	9.75	3.00
							2	11.29	2.88	11.04	2.92	10.81	2.96	10.70	2.98	10.60	3.00	10.42	3.03	10.26	3.06
							7	12.36	2.98	12.10	3.02	11.86	3.07	11.78	3.08	11.64	3.10	11.45	3.14	11.28	3.16
							10	13.44	3.08	13.16	3.13	12.91	3.17	12.80	3.19	12.69	3.21	12.49	3.24	12.31	3.27
							15	14.78	3.20	14.50	3.25	14.23	3.30	14.11	3.32	14.00	3.34	13.78	3.37	13.59	3.40
2000	2000	2000	2500	6800	15300	153%	-15	6.87	2.54	6.65	2.57	6.46	2.61	6.38	2.62	6.30	2.64	6.15	2.66	6.04	2.68
							-10	8.23	2.67	8.00	2.71	7.80	2.74	7.70	2.76	7.62	2.78	7.46	2.80	7.33	2.83
							-5	9.59	2.80	9.35	2.84	9.13	2.88	9.03	2.90	8.94	2.91	8.77	2.94	8.63	2.97
							0	10.95	2.93	10.70	2.97	10.47	3.01	10.37	3.03	10.27	3.05	10.09	3.08	9.93	3.11
							2	11.50	2.98	11.24	3.03	11.01	3.07	10.90	3.09	10.80	3.10	10.61	3.14	10.45	3.17
							7	12.59	3.09	12.32	3.13	12.08	3.18	12.00	3.19	11.86	3.21	11.67	3.25	11.49	3.28
							10	13.69	3.19	13.41	3.24	13.15	3.28	13.04	3.30	12.93	3.32	12.72	3.36	12.54	3.39
							15	15.06	3.32	14.77	3.37	14.50	3.41	14.38	3.43	14.26	3.45	14.04	3.49	13.85	3.53

* All figures comply with EN14511

1. Cooling capacity is based on 27°CDB / 19°CWB (indoor temperature), 35°CDB (outdoor temperature).
2. Heating capacity is based on 20°CDB (indoor temperature), 7°CDB/6°CWB (outdoor temperature).
3. Capacities are based on the following conditions : - Corresponding refrigerant piping length : 5m / - Level difference : 0m
4. The total ability of connected a indoor unit is up to 17.3kW
5. It is impossible to connect the indoor unit for one room only.
6. This data is reference data for temperature capacity trend.

2) Heating

HEATING

Combination (Capacity Index)					Combination (Total)	Combination (%)	Outdoor Temperature (°C, DB)	Indoor Temperature(°C, WB)													
								14		16		18		20		21		22		24	
								TC(kW)	PI(kW)	TC(kW)	PI(kW)	TC(kW)	PI(kW)	TC(kW)	PI(kW)	TC(kW)	PI(kW)	TC(kW)	PI(kW)	TC(kW)	PI(kW)
2000	2000	2000	3500	3500	13000	130%	-15	6.57	2.41	6.36	2.44	6.18	2.48	6.09	2.49	6.02	2.50	5.88	2.53	5.77	2.55
							-10	7.87	2.53	7.65	2.57	7.45	2.61	7.36	2.62	7.28	2.64	7.13	2.66	7.01	2.68
							-5	9.17	2.66	8.94	2.70	8.73	2.74	8.63	2.75	8.55	2.77	8.39	2.80	8.25	2.82
							0	10.47	2.78	10.23	2.83	10.01	2.86	9.91	2.88	9.81	2.90	9.64	2.93	9.49	2.95
							2	10.99	2.83	10.74	2.88	10.52	2.91	10.42	2.93	10.32	2.95	10.14	2.98	9.99	3.01
							7	12.04	2.93	11.78	2.98	11.55	3.02	11.47	3.03	11.34	3.05	11.15	3.08	10.99	3.11
							10	13.08	3.03	12.82	3.08	12.57	3.12	12.46	3.14	12.35	3.15	12.16	3.19	11.99	3.22
							15	14.39	3.15	14.11	3.20	13.86	3.24	13.74	3.26	13.63	3.28	13.42	3.32	13.23	3.35
2000	2000	2000	3500	5000	14500	145%	-15	6.84	2.49	6.62	2.53	6.43	2.56	6.34	2.57	6.26	2.59	6.12	2.61	6.00	2.63
							-10	8.19	2.62	7.96	2.66	7.76	2.69	7.67	2.71	7.58	2.72	7.42	2.75	7.29	2.77
							-5	9.54	2.75	9.30	2.79	9.09	2.83	8.99	2.84	8.90	2.86	8.73	2.89	8.59	2.91
							0	10.90	2.88	10.65	2.92	10.42	2.96	10.31	2.98	10.22	2.99	10.04	3.02	9.88	3.05
							2	11.44	2.93	11.19	2.97	10.95	3.01	10.84	3.03	10.74	3.05	10.56	3.08	10.40	3.11
							7	12.53	3.03	12.26	3.07	12.02	3.12	11.94	3.13	11.80	3.15	11.61	3.19	11.44	3.22
							10	13.62	3.13	13.34	3.18	13.09	3.22	12.97	3.24	12.86	3.26	12.66	3.29	12.48	3.32
							15	14.98	3.26	14.69	3.30	14.43	3.35	14.30	3.37	14.19	3.39	13.97	3.43	13.78	3.46
2000	2000	2000	3500	6800	16300	163%	-15	6.87	2.58	6.65	2.61	6.46	2.65	6.38	2.66	6.30	2.68	6.15	2.70	6.04	2.73
							-10	8.23	2.71	8.00	2.75	7.80	2.79	7.70	2.80	7.62	2.82	7.46	2.85	7.33	2.87
							-5	9.59	2.84	9.35	2.89	9.13	2.92	9.03	2.94	8.94	2.96	8.77	2.99	8.63	3.02
							0	10.95	2.98	10.70	3.02	10.47	3.06	10.37	3.08	10.27	3.10	10.09	3.13	9.93	3.16
							2	11.50	3.03	11.24	3.08	11.01	3.12	10.90	3.14	10.80	3.15	10.61	3.19	10.45	3.22
							7	12.59	3.14	12.32	3.18	12.08	3.22	12.00	3.24	11.86	3.26	11.67	3.30	11.49	3.33
							10	13.69	3.24	13.41	3.29	13.15	3.33	13.04	3.35	12.93	3.37	12.72	3.41	12.54	3.44
							15	15.06	3.37	14.77	3.42	14.50	3.47	14.38	3.49	14.26	3.51	14.04	3.55	13.85	3.58
2000	2000	2000	5000	5000	16000	160%	-15	6.87	2.57	6.65	2.61	6.46	2.64	6.38	2.66	6.30	2.67	6.15	2.70	6.04	2.72
							-10	8.23	2.70	8.00	2.74	7.80	2.78	7.70	2.79	7.62	2.81	7.46	2.84	7.33	2.86
							-5	9.59	2.84	9.35	2.88	9.13	2.92	9.03	2.93	8.94	2.95	8.77	2.98	8.63	3.01
							0	10.95	2.97	10.70	3.01	10.47	3.05	10.37	3.07	10.27	3.09	10.09	3.12	9.93	3.15
							2	11.50	3.02	11.24	3.07	11.01	3.11	10.90	3.13	10.80	3.14	10.61	3.18	10.45	3.21
							7	12.59	3.13	12.32	3.17	12.08	3.21	12.00	3.23	11.86	3.25	11.67	3.29	11.49	3.32
							10	13.69	3.23	13.41	3.28	13.15	3.32	13.04	3.34	12.93	3.36	12.72	3.40	12.54	3.43
							15	15.06	3.36	14.77	3.41	14.50	3.46	14.38	3.48	14.26	3.50	14.04	3.54	13.85	3.57
2000	2000	2500	2500	2500	11500	115%	-15	6.85	2.40	6.63	2.44	6.44	2.47	6.36	2.48	6.27	2.50	6.13	2.52	6.01	2.54
							-10	8.20	2.53	7.97	2.56	7.77	2.60	7.68	2.61	7.59	2.63	7.44	2.65	7.31	2.68
							-5	9.56	2.65	9.32	2.69	9.10	2.73	9.00	2.74	8.91	2.76	8.74	2.79	8.60	2.81
							0	10.92	2.78	10.66	2.82	10.44	2.85	10.33	2.87	10.23	2.89	10.05	2.92	9.90	2.94
							2	11.46	2.82	11.20	2.87	10.97	2.90	10.86	2.92	10.76	2.94	10.58	2.97	10.42	3.00
							7	12.55	2.92	12.28	2.97	12.04	3.01	11.96	3.02	11.82	3.04	11.63	3.07	11.46	3.10
							10	13.64	3.02	13.36	3.06	13.11	3.11	12.99	3.13	12.88	3.14	12.68	3.18	12.50	3.21
							15	15.01	3.14	14.72	3.19	14.45	3.23	14.33	3.25	14.21	3.27	13.99	3.31	13.80	3.34
2000	2000	2500	2500	3500	12500	125%	-15	6.61	2.44	6.40	2.48	6.22	2.51	6.13	2.52	6.05	2.54	5.92	2.56	5.80	2.58
							-10	7.91	2.57	7.69	2.61	7.50	2.64	7.41	2.66	7.33	2.67	7.18	2.70	7.05	2.72
							-5	9.22	2.70	8.99	2.74	8.78	2.77	8.69	2.79	8.60	2.80	8.44	2.83	8.30	2.86
							0	10.53	2.82	10.29	2.86	10.07	2.90	9.97	2.92	9.87	2.94	9.70	2.97	9.55	2.99
							2	11.06	2.87	10.81	2.91	10.59	2.95	10.48	2.97	10.38	2.99	10.21	3.02	10.05	3.05
							7	12.11	2.97	11.85	3.02	11.62	3.06	11.54	3.07	11.41	3.09	11.22	3.13	11.05	3.15
							10	13.16	3.07	12.89	3.12	12.65	3.16	12.54	3.18	12.43	3.20	12.23	3.23	12.06	3.26
							15	14.48	3.19	14.20	3.24	13.94	3.28	13.82	3.31	13.71	3.32	13.50	3.36	13.32	3.39
2000	2000	2500	2500	5000	14000	140%	-15	6.87	2.52	6.65	2.56	6.46	2.59	6.38	2.61	6.30	2.62	6.15	2.65	6.04	2.67
							-10	8.23	2.65	8.00	2.69	7.80	2.73	7.70	2.74	7.62	2.76	7.46	2.79	7.33	2.81
							-5	9.59	2.78	9.35	2.82	9.13	2.86	9.03	2.88	8.94	2.90	8.77	2.92	8.63	2.95
							0	10.95	2.91	10.70	2.96	10.47	3.00	10.37	3.01	10.27	3.03	10.09	3.06	9.93	3.09
							2	11.50	2.96	11.24	3.01	11.01	3.05	10.90	3.07	10.80	3.09	10.61	3.12	10.45	3.15
							7	12.59	3.07	12.32	3.11	12.08	3.16	12.00	3.17	11.86	3.19	11.67	3.23	11.49	3.26
							10	13.69	3.17	13.41	3.22	13.15	3.26	13.04	3.28	12.93	3.30	12.72	3.34	12.54	3.37
							15	15.06	3.30	14.77	3.35	14.50	3.39	14.38	3.41	14.26	3.43	14.04	3.47	13.85	3.50
2000	2000	2500	2500	6800	15800	158%	-15	6.87	2.61	6.65	2.65	6.46	2.68	6.38	2.70	6.30	2.71	6.15	2.74	6.04	2.76
							-10	8.23	2.74	8.00	2.78	7.80	2.82	7.70	2.84	7.62	2.85	7.46	2.88	7.33	2.91
							-5	9.59	2.88	9.35	2.92	9.13	2.96	9.03	2.98	8.94	3.00	8.77	3.03	8.63	3.05
							0	10.95	3.01	10.70	3.06	10.47	3.10	10.37	3.12	10.27	3.14	10.09	3.17	9.93	3.20
							2	11.50	3.07	11.24	3.11	11.01	3.15	10.90	3.17	10.80	3.19	10.61	3.23	10.45	3.25
							7	12.59	3.17	12.32	3.22	12.08	3.26	12.00	3.28	11.86	3.30	11.67	3.34	11.49	3.37
							10	13.69	3.28	13.41	3.33	13.15	3.37	13.04	3.39	12.93	3.41	12.72	3.45	12.54	3.48
							15	15.06	3.41	14.77	3.46	14.50	3.51	14.38	3.53	14.26	3.55	14.04	3.59	13.85	3.63
2000	2000	2500	3500	3500	13500	135%	-15	6.72	2.44	6.50	2.48	6.32	2.51	6.23	2.52	6.15	2.54	6.01	2.56	5.90	2.58
							-10	8.04	2.57	7.82	2.61	7.62	2.64	7.53	2.66	7.45	2.67	7.29	2.70	7.17	2.72
							-5	9.37	2.70	9.14	2.74	8.93	2.77	8.83	2.79	8.74	2.80	8.58	2.83	8.44	2.86
							0	10.71	2.82	10.46	2.86	10.24	2.90	10.13	2.92	10.04	2.94	9.86	2.97	9.71	2.99
							2	11.24	2.87	10.99	2.91	10.76	2.95	10.65	2.97	10.55	2.99	10.37	3.02	10.22	3.05
							7	12.31	2.97	12.05	3.02	11.81	3.06	11.73	3.07	11.59	3.09	11.40	3.13	11.24	3.15
							10	13.38	3.07	13.11	3.12	12.86	3.16	12.74	3.18	12.63	3.20	12.43	3.23	12.26	3.26
							15	14.72	3.19	14.43	3.24	14.17	3.28	14.05	3.31	13.94	3.32	13.72	3.36	13.53	3.39

* All figures comply with EN14511

1. Cooling capacity is based on 27°CDB / 19°CWB (indoor temperature), 35°CDB (outdoor temperature).
2. Heating capacity is based on 20°CDB (indoor temperature), 7°CDB/6°CWB (outdoor temperature).
3. Capacities are based on the following conditions : - Corresponding refrigerant piping length : 5m / - Level difference : 0m
4. The total ability of connected a indoor unit is up to 17.3kW
5. It is impossible to connect the indoor unit for one room only.
6. This data is reference data for temperature capacity trend.

7 AJ100FCJ5EH

2) Heating

HEATING

Combination (Capacity Index)					Combination (Total)	Combination (%)	Outdoor Temperature (°C, DB)	Indoor Temperature(°C, WB)													
								14		16		18		20		21		22		24	
								TC(kW)	PI(kW)	TC(kW)	PI(kW)	TC(kW)	PI(kW)	TC(kW)	PI(kW)	TC(kW)	PI(kW)	TC(kW)	PI(kW)	TC(kW)	PI(kW)
2000	2000	2500	3500	5000	15000	150%	-15	6.87	2.52	6.65	2.56	6.46	2.59	6.38	2.61	6.30	2.62	6.15	2.65	6.04	2.67
							-10	8.23	2.65	8.00	2.69	7.80	2.73	7.70	2.74	7.62	2.76	7.46	2.79	7.33	2.81
							-5	9.59	2.78	9.35	2.82	9.13	2.86	9.03	2.88	8.94	2.90	8.77	2.92	8.63	2.95
							0	10.95	2.91	10.70	2.96	10.47	3.00	10.37	3.01	10.27	3.03	10.09	3.06	9.93	3.09
							2	11.50	2.96	11.24	3.01	11.01	3.05	10.90	3.07	10.80	3.09	10.61	3.12	10.45	3.15
							7	12.59	3.07	12.32	3.11	12.08	3.16	12.00	3.17	11.86	3.19	11.67	3.23	11.49	3.26
							10	13.69	3.17	13.41	3.22	13.15	3.26	13.04	3.28	12.93	3.30	12.72	3.34	12.54	3.37
							15	15.06	3.30	14.77	3.35	14.50	3.39	14.38	3.41	14.26	3.43	14.04	3.47	13.85	3.50
2000	2000	2500	3500	6800	16800	168%	-15	6.87	2.61	6.65	2.65	6.46	2.68	6.38	2.70	6.30	2.71	6.15	2.74	6.04	2.76
							-10	8.23	2.74	8.00	2.78	7.80	2.82	7.70	2.84	7.62	2.85	7.46	2.88	7.33	2.91
							-5	9.59	2.88	9.35	2.92	9.13	2.96	9.03	2.98	8.94	3.00	8.77	3.03	8.63	3.05
							0	10.95	3.01	10.70	3.06	10.47	3.10	10.37	3.12	10.27	3.14	10.09	3.17	9.93	3.20
							2	11.50	3.07	11.24	3.11	11.01	3.15	10.90	3.17	10.80	3.19	10.61	3.23	10.45	3.25
							7	12.59	3.17	12.32	3.22	12.08	3.26	12.00	3.28	11.86	3.30	11.67	3.34	11.49	3.37
							10	13.69	3.28	13.41	3.33	13.15	3.37	13.04	3.39	12.93	3.41	12.72	3.45	12.54	3.48
							15	15.06	3.41	14.77	3.46	14.50	3.51	14.38	3.53	14.26	3.55	14.04	3.59	13.85	3.63
2000	2000	2500	5000	5000	16500	165%	-15	6.87	2.61	6.65	2.65	6.46	2.68	6.38	2.70	6.30	2.71	6.15	2.74	6.04	2.76
							-10	8.23	2.74	8.00	2.78	7.80	2.82	7.70	2.84	7.62	2.85	7.46	2.88	7.33	2.91
							-5	9.59	2.88	9.35	2.92	9.13	2.96	9.03	2.98	8.94	3.00	8.77	3.03	8.63	3.05
							0	10.95	3.01	10.70	3.06	10.47	3.10	10.37	3.12	10.27	3.14	10.09	3.17	9.93	3.20
							2	11.50	3.07	11.24	3.11	11.01	3.15	10.90	3.17	10.80	3.19	10.61	3.23	10.45	3.25
							7	12.59	3.17	12.32	3.22	12.08	3.26	12.00	3.28	11.86	3.30	11.67	3.34	11.49	3.37
							10	13.69	3.28	13.41	3.33	13.15	3.37	13.04	3.39	12.93	3.41	12.72	3.45	12.54	3.48
							15	15.06	3.41	14.77	3.46	14.50	3.51	14.38	3.53	14.26	3.55	14.04	3.59	13.85	3.63
2000	2000	3500	3500	3500	14500	145%	-15	6.81	2.48	6.60	2.52	6.41	2.55	6.32	2.56	6.24	2.58	6.10	2.60	5.98	2.62
							-10	8.16	2.61	7.93	2.65	7.73	2.68	7.64	2.70	7.55	2.71	7.40	2.74	7.27	2.76
							-5	9.51	2.74	9.27	2.78	9.06	2.82	8.96	2.83	8.87	2.85	8.70	2.88	8.56	2.90
							0	10.86	2.87	10.61	2.91	10.38	2.95	10.28	2.97	10.18	2.98	10.00	3.01	9.85	3.04
							2	11.40	2.92	11.15	2.96	10.92	3.00	10.81	3.02	10.71	3.04	10.52	3.07	10.36	3.10
							7	12.49	3.02	12.22	3.06	11.98	3.11	11.90	3.12	11.76	3.14	11.57	3.18	11.40	3.21
							10	13.57	3.12	13.30	3.17	13.05	3.21	12.93	3.23	12.82	3.25	12.61	3.28	12.43	3.31
							15	14.93	3.24	14.64	3.29	14.38	3.34	14.26	3.36	14.14	3.38	13.92	3.42	13.73	3.45
2000	2000	3500	3500	5000	16000	160%	-15	6.87	2.56	6.65	2.60	6.46	2.63	6.38	2.65	6.30	2.66	6.15	2.69	6.04	2.71
							-10	8.23	2.69	8.00	2.73	7.80	2.77	7.70	2.79	7.62	2.80	7.46	2.83	7.33	2.85
							-5	9.59	2.83	9.35	2.87	9.13	2.91	9.03	2.92	8.94	2.94	8.77	2.97	8.63	3.00
							0	10.95	2.96	10.70	3.00	10.47	3.04	10.37	3.06	10.27	3.08	10.09	3.11	9.93	3.14
							2	11.50	3.01	11.24	3.06	11.01	3.10	10.90	3.12	10.80	3.13	10.61	3.17	10.45	3.20
							7	12.59	3.12	12.32	3.16	12.08	3.20	12.00	3.22	11.86	3.24	11.67	3.28	11.49	3.31
							10	13.69	3.22	13.41	3.27	13.15	3.31	13.04	3.33	12.93	3.35	12.72	3.39	12.54	3.42
							15	15.06	3.35	14.77	3.40	14.50	3.45	14.38	3.47	14.26	3.49	14.04	3.53	13.85	3.56
2000	2500	2500	2500	2500	12000	120%	-15	6.68	2.43	6.47	2.47	6.29	2.50	6.20	2.52	6.12	2.53	5.98	2.55	5.87	2.57
							-10	8.00	2.56	7.78	2.60	7.58	2.63	7.49	2.65	7.41	2.66	7.26	2.69	7.13	2.71
							-5	9.33	2.69	9.09	2.73	8.88	2.76	8.79	2.78	8.69	2.79	8.53	2.82	8.39	2.85
							0	10.65	2.81	10.41	2.85	10.18	2.89	10.08	2.91	9.98	2.93	9.81	2.96	9.66	2.98
							2	11.18	2.86	10.93	2.90	10.70	2.94	10.60	2.96	10.50	2.98	10.32	3.01	10.16	3.04
							7	12.25	2.96	11.99	3.01	11.75	3.05	11.67	3.06	11.53	3.08	11.34	3.11	11.18	3.14
							10	13.31	3.06	13.04	3.11	12.79	3.15	12.68	3.17	12.57	3.19	12.37	3.22	12.19	3.25
							15	14.64	3.18	14.36	3.23	14.10	3.27	13.98	3.29	13.87	3.31	13.65	3.35	13.47	3.38
2000	2500	2500	2500	3500	13000	130%	-15	6.77	2.47	6.55	2.51	6.37	2.54	6.28	2.56	6.20	2.57	6.06	2.60	5.94	2.62
							-10	8.11	2.60	7.88	2.64	7.68	2.68	7.59	2.69	7.50	2.71	7.35	2.73	7.22	2.76
							-5	9.45	2.73	9.21	2.77	9.00	2.81	8.90	2.82	8.81	2.84	8.64	2.87	8.50	2.89
							0	10.79	2.86	10.54	2.90	10.31	2.94	10.21	2.96	10.11	2.97	9.94	3.00	9.78	3.03
							2	11.33	2.91	11.07	2.95	10.84	2.99	10.74	3.01	10.64	3.03	10.45	3.06	10.29	3.09
							7	12.40	3.01	12.14	3.05	11.90	3.10	11.82	3.11	11.68	3.13	11.49	3.17	11.32	3.20
							10	13.48	3.11	13.21	3.16	12.96	3.20	12.84	3.22	12.73	3.24	12.53	3.27	12.35	3.30
							15	14.83	3.23	14.55	3.28	14.28	3.33	14.16	3.35	14.04	3.37	13.83	3.41	13.64	3.44
2000	2500	2500	2500	5000	14500	145%	-15	6.87	2.55	6.65	2.59	6.46	2.62	6.38	2.64	6.30	2.65	6.15	2.68	6.04	2.70
							-10	8.23	2.69	8.00	2.73	7.80	2.76	7.70	2.78	7.62	2.79	7.46	2.82	7.33	2.84
							-5	9.59	2.82	9.35	2.86	9.13	2.90	9.03	2.92	8.94	2.93	8.77	2.96	8.63	2.99
							0	10.95	2.95	10.70	2.99	10.47	3.03	10.37	3.05	10.27	3.07	10.09	3.10	9.93	3.13
							2	11.50	3.00	11.24	3.05	11.01	3.09	10.90	3.11	10.80	3.12	10.61	3.16	10.45	3.19
							7	12.59	3.11	12.32	3.15	12.08	3.19	12.00	3.21	11.86	3.23	11.67	3.27	11.49	3.30
							10	13.69	3.21	13.41	3.26	13.15	3.30	13.04	3.32	12.93	3.34	12.72	3.38	12.54	3.41
							15	15.06	3.34	14.77	3.39	14.50	3.43	14.38	3.46	14.26	3.48	14.04	3.51	13.85	3.55
2000	2500	2500	2500	6800	16300	163%	-15	6.87	2.64	6.65	2.68	6.46	2.71	6.38	2.73	6.30	2.74	6.15	2.77	6.04	2.79
							-10	8.23	2.78	8.00	2.82	7.80	2.86	7.70	2.87	7.62	2.89	7.46	2.92	7.33	2.94
							-5	9.59	2.91	9.35	2.96	9.13	3.00	9.03	3.02	8.94	3.03	8.77	3.06	8.63	3.09
							0	10.95	3.05	10.70	3.10	10.47	3.14	10.37	3.16	10.27	3.17	10.09	3.21	9.93	3.24
							2	11.50	3.10	11.24	3.15	11.01	3.19	10.90	3.21	10.80	3.23	10.61	3.27	10.45	3.29
							7	12.59	3.21	12.32	3.26	12.08	3.30	12.00	3.32	11.86	3.34	11.67	3.38	11.49	3.41
							10	13.69	3.32	13.41	3.37	13.15	3.41	13.04	3.44	12.93	3.46	12.72	3.49	12.54	3.53
							15	15.06	3.45	14.77	3.50	14.50	3.55	14.38	3.57	14.26	3.60	14.04	3.64	13.85	3.67

* All figures comply with EN14511

1. Cooling capacity is based on 27°CDB / 19°CWB (indoor temperature), 35°CDB (outdoor temperature).
2. Heating capacity is based on 20°CDB (indoor temperature), 7°CDB/6°CWB (outdoor temperature).
3. Capacities are based on the following conditions : - Corresponding refrigerant piping length : 5m / - Level difference : 0m
4. The total ability of connected a indoor unit is up to 17.3kW
5. It is impossible to connect the indoor unit for one room only.
6. This data is reference data for temperature capacity trend.

2) Heating

HEATING

Combination (Capacity Index)					Combination (Total)	Combination (%)	Outdoor Temperature (°C, DB)	Indoor Temperature(°C, WB)													
								14		16		18		20		21		22		24	
								TC(kW)	PI(kW)	TC(kW)	PI(kW)	TC(kW)	PI(kW)	TC(kW)	PI(kW)	TC(kW)	PI(kW)	TC(kW)	PI(kW)	TC(kW)	PI(kW)
2000	2500	2500	3500	3500	14000	140%	-15	6.87	2.51	6.65	2.55	6.46	2.58	6.38	2.60	6.30	2.61	6.15	2.64	6.04	2.66
							-10	8.23	2.64	8.00	2.68	7.80	2.72	7.70	2.73	7.62	2.75	7.46	2.78	7.33	2.80
							-5	9.59	2.77	9.35	2.82	9.13	2.85	9.03	2.87	8.94	2.89	8.77	2.92	8.63	2.94
							0	10.95	2.90	10.70	2.95	10.47	2.99	10.37	3.00	10.27	3.02	10.09	3.05	9.93	3.08
							2	11.50	2.96	11.24	3.00	11.01	3.04	10.90	3.06	10.80	3.08	10.61	3.11	10.45	3.14
							7	12.59	3.06	12.32	3.10	12.08	3.15	12.00	3.16	11.86	3.18	11.67	3.22	11.49	3.25
							10	13.69	3.16	13.41	3.21	13.15	3.25	13.04	3.27	12.93	3.29	12.72	3.33	12.54	3.36
							15	15.06	3.29	14.77	3.34	14.50	3.38	14.38	3.40	14.26	3.42	14.04	3.46	13.85	3.49
2000	2500	2500	3500	5000	15500	155%	-15	6.87	2.59	6.65	2.63	6.46	2.66	6.38	2.68	6.30	2.69	6.15	2.72	6.04	2.74
							-10	8.23	2.73	8.00	2.77	7.80	2.80	7.70	2.82	7.62	2.84	7.46	2.86	7.33	2.89
							-5	9.59	2.86	9.35	2.90	9.13	2.94	9.03	2.96	8.94	2.98	8.77	3.01	8.63	3.03
							0	10.95	3.00	10.70	3.04	10.47	3.08	10.37	3.10	10.27	3.12	10.09	3.15	9.93	3.18
							2	11.50	3.05	11.24	3.09	11.01	3.14	10.90	3.15	10.80	3.17	10.61	3.21	10.45	3.24
							7	12.59	3.15	12.32	3.20	12.08	3.24	12.00	3.26	11.86	3.28	11.67	3.32	11.49	3.35
							10	13.69	3.26	13.41	3.31	13.15	3.35	13.04	3.37	12.93	3.39	12.72	3.43	12.54	3.46
							15	15.06	3.39	14.77	3.44	14.50	3.49	14.38	3.51	14.26	3.53	14.04	3.57	13.85	3.60
2000	2500	2500	3500	6800	17300	173%	-15	6.87	2.68	6.65	2.72	6.46	2.75	6.38	2.77	6.30	2.79	6.15	2.81	6.04	2.84
							-10	8.23	2.82	8.00	2.86	7.80	2.90	7.70	2.92	7.62	2.93	7.46	2.96	7.33	2.99
							-5	9.59	2.96	9.35	3.00	9.13	3.04	9.03	3.06	8.94	3.08	8.77	3.11	8.63	3.14
							0	10.95	3.10	10.70	3.14	10.47	3.18	10.37	3.20	10.27	3.22	10.09	3.26	9.93	3.28
							2	11.50	3.15	11.24	3.20	11.01	3.24	10.90	3.26	10.80	3.28	10.61	3.31	10.45	3.34
							7	12.59	3.26	12.32	3.31	12.08	3.35	12.00	3.37	11.86	3.39	11.67	3.43	11.49	3.46
							10	13.69	3.37	13.41	3.42	13.15	3.47	13.04	3.49	12.93	3.51	12.72	3.55	12.54	3.58
							15	15.06	3.50	14.77	3.56	14.50	3.61	14.38	3.63	14.26	3.65	14.04	3.69	13.85	3.73
2000	2500	2500	5000	5000	17000	170%	-15	6.87	2.68	6.65	2.72	6.46	2.75	6.38	2.77	6.30	2.79	6.15	2.81	6.04	2.84
							-10	8.23	2.82	8.00	2.86	7.80	2.90	7.70	2.92	7.62	2.93	7.46	2.96	7.33	2.99
							-5	9.59	2.96	9.35	3.00	9.13	3.04	9.03	3.06	8.94	3.08	8.77	3.11	8.63	3.14
							0	10.95	3.10	10.70	3.14	10.47	3.18	10.37	3.20	10.27	3.22	10.09	3.26	9.93	3.28
							2	11.50	3.15	11.24	3.20	11.01	3.24	10.90	3.26	10.80	3.28	10.61	3.31	10.45	3.34
							7	12.59	3.26	12.32	3.31	12.08	3.35	12.00	3.37	11.86	3.39	11.67	3.43	11.49	3.46
							10	13.69	3.37	13.41	3.42	13.15	3.47	13.04	3.49	12.93	3.51	12.72	3.55	12.54	3.58
							15	15.06	3.50	14.77	3.56	14.50	3.61	14.38	3.63	14.26	3.65	14.04	3.69	13.85	3.73
2000	2500	3500	3500	3500	15000	150%	-15	6.87	2.51	6.65	2.55	6.46	2.58	6.38	2.60	6.30	2.61	6.15	2.64	6.04	2.66
							-10	8.23	2.64	8.00	2.68	7.80	2.72	7.70	2.73	7.62	2.75	7.46	2.78	7.33	2.80
							-5	9.59	2.77	9.35	2.82	9.13	2.85	9.03	2.87	8.94	2.89	8.77	2.92	8.63	2.94
							0	10.95	2.90	10.70	2.95	10.47	2.99	10.37	3.00	10.27	3.02	10.09	3.05	9.93	3.08
							2	11.50	2.96	11.24	3.00	11.01	3.04	10.90	3.06	10.80	3.08	10.61	3.11	10.45	3.14
							7	12.59	3.06	12.32	3.10	12.08	3.15	12.00	3.16	11.86	3.18	11.67	3.22	11.49	3.25
							10	13.69	3.16	13.41	3.21	13.15	3.25	13.04	3.27	12.93	3.29	12.72	3.33	12.54	3.36
							15	15.06	3.29	14.77	3.34	14.50	3.38	14.38	3.40	14.26	3.42	14.04	3.46	13.85	3.49
2000	2500	3500	3500	5000	16500	165%	-15	6.87	2.60	6.65	2.64	6.46	2.67	6.38	2.69	6.30	2.70	6.15	2.73	6.04	2.75
							-10	8.23	2.74	8.00	2.78	7.80	2.81	7.70	2.83	7.62	2.85	7.46	2.87	7.33	2.90
							-5	9.59	2.87	9.35	2.91	9.13	2.95	9.03	2.97	8.94	2.99	8.77	3.02	8.63	3.04
							0	10.95	3.00	10.70	3.05	10.47	3.09	10.37	3.11	10.27	3.13	10.09	3.16	9.93	3.19
							2	11.50	3.06	11.24	3.10	11.01	3.15	10.90	3.16	10.80	3.18	10.61	3.22	10.45	3.24
							7	12.59	3.16	12.32	3.21	12.08	3.25	12.00	3.27	11.86	3.29	11.67	3.33	11.49	3.36
							10	13.69	3.27	13.41	3.32	13.15	3.36	13.04	3.38	12.93	3.40	12.72	3.44	12.54	3.47
							15	15.06	3.40	14.77	3.45	14.50	3.50	14.38	3.52	14.26	3.54	14.04	3.58	13.85	3.61
2000	3500	3500	3500	3500	16000	160%	-15	6.87	2.55	6.65	2.59	6.46	2.62	6.38	2.64	6.30	2.65	6.15	2.68	6.04	2.70
							-10	8.23	2.69	8.00	2.73	7.80	2.76	7.70	2.78	7.62	2.79	7.46	2.82	7.33	2.84
							-5	9.59	2.82	9.35	2.86	9.13	2.90	9.03	2.92	8.94	2.93	8.77	2.96	8.63	2.99
							0	10.95	2.95	10.70	2.99	10.47	3.03	10.37	3.05	10.27	3.07	10.09	3.10	9.93	3.13
							2	11.50	3.00	11.24	3.05	11.01	3.09	10.90	3.11	10.80	3.12	10.61	3.16	10.45	3.19
							7	12.59	3.11	12.32	3.15	12.08	3.19	12.00	3.21	11.86	3.23	11.67	3.27	11.49	3.30
							10	13.69	3.21	13.41	3.26	13.15	3.30	13.04	3.32	12.93	3.34	12.72	3.38	12.54	3.41
							15	15.06	3.34	14.77	3.39	14.50	3.43	14.38	3.46	14.26	3.48	14.04	3.51	13.85	3.55
2500	2500	2500	2500	2500	12500	125%	-15	6.87	2.33	6.65	2.36	6.46	2.39	6.38	2.41	6.30	2.42	6.15	2.45	6.04	2.46
							-10	8.23	2.45	8.00	2.49	7.80	2.52	7.70	2.54	7.62	2.55	7.46	2.57	7.33	2.60
							-5	9.59	2.57	9.35	2.61	9.13	2.65	9.03	2.66	8.94	2.68	8.77	2.70	8.63	2.73
							0	10.95	2.69	10.70	2.73	10.47	2.77	10.37	2.79	10.27	2.80	10.09	2.83	9.93	2.86
							2	11.50	2.74	11.24	2.78	11.01	2.82	10.90	2.84	10.80	2.85	10.61	2.88	10.45	2.91
							7	12.59	2.84	12.32	2.88	12.08	2.92	12.00	2.93	11.86	2.95	11.67	2.98	11.49	3.01
							10	13.69	2.93	13.41	2.97	13.15	3.01	13.04	3.03	12.93	3.05	12.72	3.08	12.54	3.11
							15	15.06	3.05	14.77	3.09	14.50	3.13	14.38	3.15	14.26	3.17	14.04	3.21	13.85	3.24
2500	2500	2500	2500	3500	13500	135%	-15	6.87	2.50	6.65	2.54	6.46	2.57	6.38	2.59	6.30	2.60	6.15	2.63	6.04	2.65
							-10	8.23	2.64	8.00	2.67	7.80	2.71	7.70	2.73	7.62	2.74	7.46	2.77	7.33	2.79
							-5	9.59	2.77	9.35	2.81	9.13	2.84	9.03	2.86	8.94	2.88	8.77	2.91	8.63	2.93
							0	10.95	2.89	10.70	2.94	10.47	2.98	10.37	2.99	10.27	3.01	10.09	3.04	9.93	3.07
							2	11.50	2.95	11.24	2.99	11.01	3.03	10.90	3.05	10.80	3.07	10.61	3.10	10.45	3.13
							7	12.59	3.05	12.32	3.09	12.08	3.14	12.00	3.15	11.86	3.17	11.67	3.21	11.49	3.24
							10	13.69	3.15	13.41	3.20	13.15	3.24	13.04	3.26	12.93	3.28	12.72	3.31	12.54	3.35
							15	15.06	3.28	14.77	3.33	14.50	3.37	14.38	3.39	14.26	3.41	14.04	3.45	13.85	3.48

* All figures comply with EN14511

1. Cooling capacity is based on 27°CDB / 19°CWB (indoor temperature), 35°CDB (outdoor temperature).
2. Heating capacity is based on 20°CDB (indoor temperature), 7°CDB/6°CWB (outdoor temperature).
3. Capacities are based on the following conditions : - Corresponding refrigerant piping length : 5m / - Level difference : 0m
4. The total ability of connected a indoor unit is up to 17.3kW
5. It is impossible to connect the indoor unit for one room only.
6. This data is reference data for temperature capacity trend.

7 AJ100FCJ5EH

2) Heating

	Combination (Capacity Index)					Combination (Total)	Combination (%)	Outdoor Temperature (°C, DB)	Indoor Temperature(°C, WB)													
									14		16		18		20		21		22		24	
									TC(kW)	PI(kW)	TC(kW)	PI(kW)	TC(kW)	PI(kW)	TC(kW)	PI(kW)	TC(kW)	PI(kW)	TC(kW)	PI(kW)	TC(kW)	PI(kW)
HEATING	2500	2500	2500	2500	5000	15000	150%	-15	6.87	2.59	6.65	2.63	6.46	2.66	6.38	2.68	6.30	2.69	6.15	2.72	6.04	2.74
								-10	8.23	2.73	8.00	2.77	7.80	2.80	7.70	2.82	7.62	2.84	7.46	2.86	7.33	2.89
								-5	9.59	2.86	9.35	2.90	9.13	2.94	9.03	2.96	8.94	2.98	8.77	3.01	8.63	3.03
								0	10.95	3.00	10.70	3.04	10.47	3.08	10.37	3.10	10.27	3.12	10.09	3.15	9.93	3.18
								2	11.50	3.05	11.24	3.09	11.01	3.14	10.90	3.15	10.80	3.17	10.61	3.21	10.45	3.24
								7	12.59	3.15	12.32	3.20	12.08	3.24	12.00	3.26	11.86	3.28	11.67	3.32	11.49	3.35
								10	13.69	3.26	13.41	3.31	13.15	3.35	13.04	3.37	12.93	3.39	12.72	3.43	12.54	3.46
								15	15.06	3.39	14.77	3.44	14.50	3.49	14.38	3.51	14.26	3.53	14.04	3.57	13.85	3.60
	2500	2500	2500	2500	6800	16800	168%	-15	6.87	2.68	6.65	2.72	6.46	2.75	6.38	2.77	6.30	2.79	6.15	2.81	6.04	2.84
								-10	8.23	2.82	8.00	2.86	7.80	2.90	7.70	2.92	7.62	2.93	7.46	2.96	7.33	2.99
								-5	9.59	2.96	9.35	3.00	9.13	3.04	9.03	3.06	8.94	3.08	8.77	3.11	8.63	3.14
								0	10.95	3.10	10.70	3.14	10.47	3.18	10.37	3.20	10.27	3.22	10.09	3.26	9.93	3.28
								2	11.50	3.15	11.24	3.20	11.01	3.24	10.90	3.26	10.80	3.28	10.61	3.31	10.45	3.34
								7	12.59	3.26	12.32	3.31	12.08	3.35	12.00	3.37	11.86	3.39	11.67	3.43	11.49	3.46
								10	13.69	3.37	13.41	3.42	13.15	3.47	13.04	3.49	12.93	3.51	12.72	3.55	12.54	3.58
								15	15.06	3.50	14.77	3.56	14.50	3.61	14.38	3.63	14.26	3.65	14.04	3.69	13.85	3.73
	2500	2500	2500	3500	3500	14500	145%	-15	6.87	2.54	6.65	2.58	6.46	2.62	6.38	2.63	6.30	2.64	6.15	2.67	6.04	2.69
								-10	8.23	2.68	8.00	2.72	7.80	2.75	7.70	2.77	7.62	2.78	7.46	2.81	7.33	2.84
								-5	9.59	2.81	9.35	2.85	9.13	2.89	9.03	2.91	8.94	2.92	8.77	2.95	8.63	2.98
								0	10.95	2.94	10.70	2.98	10.47	3.02	10.37	3.04	10.27	3.06	10.09	3.09	9.93	3.12
								2	11.50	2.99	11.24	3.04	11.01	3.08	10.90	3.10	10.80	3.11	10.61	3.15	10.45	3.18
								7	12.59	3.10	12.32	3.14	12.08	3.19	12.00	3.20	11.86	3.22	11.67	3.26	11.49	3.29
								10	13.69	3.20	13.41	3.25	13.15	3.29	13.04	3.31	12.93	3.33	12.72	3.37	12.54	3.40
								15	15.06	3.33	14.77	3.38	14.50	3.42	14.38	3.45	14.26	3.47	14.04	3.50	13.85	3.54
	2500	2500	2500	3500	5000	16000	160%	-15	6.87	2.63	6.65	2.67	6.46	2.71	6.38	2.72	6.30	2.74	6.15	2.76	6.04	2.78
								-10	8.23	2.77	8.00	2.81	7.80	2.85	7.70	2.86	7.62	2.88	7.46	2.91	7.33	2.93
								-5	9.59	2.91	9.35	2.95	9.13	2.99	9.03	3.01	8.94	3.02	8.77	3.05	8.63	3.08
								0	10.95	3.04	10.70	3.09	10.47	3.13	10.37	3.15	10.27	3.16	10.09	3.20	9.93	3.23
								2	11.50	3.10	11.24	3.14	11.01	3.18	10.90	3.20	10.80	3.22	10.61	3.26	10.45	3.28
								7	12.59	3.20	12.32	3.25	12.08	3.29	12.00	3.31	11.86	3.33	11.67	3.37	11.49	3.40
								10	13.69	3.31	13.41	3.36	13.15	3.40	13.04	3.43	12.93	3.45	12.72	3.48	12.54	3.52
								15	15.06	3.44	14.77	3.49	14.50	3.54	14.38	3.56	14.26	3.58	14.04	3.62	13.85	3.66
	2500	2500	3500	3500	3500	15500	155%	-15	6.87	2.58	6.65	2.62	6.46	2.66	6.38	2.67	6.30	2.69	6.15	2.71	6.04	2.73
								-10	8.23	2.72	8.00	2.76	7.80	2.80	7.70	2.81	7.62	2.83	7.46	2.86	7.33	2.88
								-5	9.59	2.85	9.35	2.90	9.13	2.93	9.03	2.95	8.94	2.97	8.77	3.00	8.63	3.02
								0	10.95	2.99	10.70	3.03	10.47	3.07	10.37	3.09	10.27	3.11	10.09	3.14	9.93	3.17
								2	11.50	3.04	11.24	3.08	11.01	3.13	10.90	3.15	10.80	3.16	10.61	3.20	10.45	3.23
								7	12.59	3.14	12.32	3.19	12.08	3.23	12.00	3.25	11.86	3.27	11.67	3.31	11.49	3.34
								10	13.69	3.25	13.41	3.30	13.15	3.34	13.04	3.36	12.93	3.38	12.72	3.42	12.54	3.45
								15	15.06	3.38	14.77	3.43	14.50	3.48	14.38	3.50	14.26	3.52	14.04	3.56	13.85	3.59
	2500	2500	3500	3500	5000	17000	170%	-15	6.87	2.67	6.65	2.71	6.46	2.75	6.38	2.76	6.30	2.78	6.15	2.80	6.04	2.83
								-10	8.23	2.81	8.00	2.85	7.80	2.89	7.70	2.91	7.62	2.92	7.46	2.95	7.33	2.98
								-5	9.59	2.95	9.35	2.99	9.13	3.03	9.03	3.05	8.94	3.07	8.77	3.10	8.63	3.13
								0	10.95	3.09	10.70	3.13	10.47	3.18	10.37	3.19	10.27	3.21	10.09	3.25	9.93	3.28
								2	11.50	3.14	11.24	3.19	11.01	3.23	10.90	3.25	10.80	3.27	10.61	3.30	10.45	3.33
								7	12.59	3.25	12.32	3.30	12.08	3.34	12.00	3.36	11.86	3.38	11.67	3.42	11.49	3.45
								10	13.69	3.36	13.41	3.41	13.15	3.46	13.04	3.48	12.93	3.50	12.72	3.54	12.54	3.57
								15	15.06	3.49	14.77	3.55	14.50	3.60	14.38	3.62	14.26	3.64	14.04	3.68	13.85	3.71
	2500	3500	3500	3500	3500	16500	165%	-15	6.87	2.59	6.65	2.63	6.46	2.66	6.38	2.68	6.30	2.69	6.15	2.72	6.04	2.74
								-10	8.23	2.73	8.00	2.77	7.80	2.80	7.70	2.82	7.62	2.84	7.46	2.86	7.33	2.89
								-5	9.59	2.86	9.35	2.90	9.13	2.94	9.03	2.96	8.94	2.98	8.77	3.01	8.63	3.03
								0	10.95	3.00	10.70	3.04	10.47	3.08	10.37	3.10	10.27	3.12	10.09	3.15	9.93	3.18
								2	11.50	3.05	11.24	3.09	11.01	3.14	10.90	3.15	10.80	3.17	10.61	3.21	10.45	3.24
								7	12.59	3.15	12.32	3.20	12.08	3.24	12.00	3.26	11.86	3.28	11.67	3.32	11.49	3.35
								10	13.69	3.26	13.41	3.31	13.15	3.35	13.04	3.37	12.93	3.39	12.72	3.43	12.54	3.46
								15	15.06	3.39	14.77	3.44	14.50	3.49	14.38	3.51	14.26	3.53	14.04	3.57	13.85	3.60

* All figures comply with EN14511

1. Cooling capacity is based on 27°CDB / 19°CWB (indoor temperature), 35°CDB (outdoor temperature).
2. Heating capacity is based on 20°CDB (indoor temperature), 7°CDB/6°CWB (outdoor temperature).
3. Capacities are based on the following conditions : - Corresponding refrigerant piping length : 5m / - Level difference : 0m
4. The total ability of connected a indoor unit is up to 17.3kW
5. It is impossible to connect the indoor unit for one room only.
6. This data is reference data for temperature capacity trend.

Memo

SAMSUNG

2016.05.
Ver.1.5

Samsung Electronics Co., LTD.
B2B PM / SE
Head Office (Suwon Korea) 129, Samsung-Ro, Yeongtong-Gu, Suwon City, Gyeonggi-Do, Korea 443-742
Website : www.samsung.com Email : airconditioner@samsung.com
Images and data in this book may subject to change without prior notice.

SAMSUNG