VRF

Technical Data Book

DVM Chiller for Europe (R410A, 50/60Hz, HP)

Model : AG***KSVANH/EU

SAMSUNG

History

Version	Modification	Date	Remark
Ver.1.0	Release DVM Chiller TDB for Europe	‘16. 01. 18.	

Nomenclature

Model Name

AG	070	K	S	V	A	N	H	/	EU
(1)	(2)	(3)	(4)	(5)	(6)	(7)	(8)		Buyer

(1) Classification

AG	Chiller
AM	DVM

(2) Capacity

kW (3 digits)

(3) Version

F	2013
H	2014
J	2015
K	2016

(4) Product Type

S	Set
X	Outdoor Unit
N	Indoor Unit

(5) Feature1

V	Inverter

(6) Feature2

A	Standard + General Temp.+ Module

(7) Rating Voltage

N	3Ø, 380~415V, 50/60Hz
G	3Ø, 380~415V, 50Hz
E	1Ø, 220~240V, 50Hz

(8) Mode

H	Heat Pump

Index

1 Specification
2 Modulation guide
3 Capacity table
4 Capacity correction
5 Dimensional drawing
6 Sound level
7 Electrical wiring diagram
8 Cycle diagram
9 Operation limit
10 Hydraulic performance
11 External contact

1 Specification

DVM Chiller

Type				DVM Chiller	DVM Chiller	DVM Chiller
Model Name				AG042KSVANH/EU	AG056KSVANH/EU	AG070KSVANH/EU
Power Supply			Φ, #, V, Hz	3,4,380-415,50/60	3,4,380-415,50/60	3,4,380-415,50/60
Mode			-	HEAT PUMP	HEAT PUMP	HEAT PUMP
Performance	HP		HP	15	20	25
	Ton		usRT	12	16	18.5
	Capacity (Nominal)	Cooling	kW	42.0	56.0	65.0
		Heating	kW	42.0	56.0	69.5
Power	Power Input (Nominal)	Cooling	kW	12.35	18.67	26.00
		Heating		11.83	17.50	24.39
	Current Input (Nominal)	Cooling	A	19.6	29.6	41.2
		Heating		18.8	27.8	38.7
	MCA		A	32.0	46.0	58.0
	MFA		A	40	60	75
COP	Nominal Cooling		W/W	3.40	3.00	2.50
	Nominal Heating		W/W	3.55	3.20	2.85
Efficiency	ESEER		W/W	5.7	5.4	5.0
Compressor	Type		-	Scroll Inverter	Scroll Inverter	Scroll Inverter
	Output		kW × n	6.76 x 2	6.76 x 2	6.76 x 2
	Model Name		-	DS-GB070FAVA	DS-GB070FAVA	DS-GB070FAVA
	Oil	Type	-	PVE	PVE	PVE
Fan	Type		-	Propeller	Propeller	Propeller
	Output x n		W	630 x 2	630 x 2	630 x 2
	Air Flow Rate		CMM	364 (182 x 2)	364 (182 x 2)	392 (196 x 2)
	External Static Pressure	Max.	mmAq	8.0	8.0	8.0
Water Side Heat Exchanger	Type		-	Brazing Plate	Brazing Plate	Brazing Plate
	Q'Ty		EA	2	2	2
	Water Flow Rate (Cooling / Heating)		LPM	120 / 120	160 / 160	186 / 200
	Pressure Drop (Set, Norminal)		kPa	60	100	120
	Max Operationg Pressure		MPa	1.0	1.0	1.0
	Connection Type		-	FLANGE	FLANGE	FLANGE
	Pipe connection (Inlet / Outlet)		A	40	40	50
Field Wiring	Power Source Wire		mm2	-	-	-
	Transmission Cable		mm2	0.75 ~ 1.5	0.75 ~ 1.5	0.75 ~ 1.5
Refrigerant	Type		-	R410A	R410A	R410A
	Factory Charging		kg	18.0	18.0	18.0
Sound	Sound Pressure		dB(A)	60.0	62.0	63.0
	Sound Power			80.0	83.0	85.0
External Dimension	Net Weight		kg	446	446	465
	Shipping Weight		kg	468	468	487
	Net Dimensions (WxHxD)		mm	1,795 x 1,695 x 765	1,795 x 1,695 x 765	1,795 x 1,695 x 765
	Shipping Dimensions (WxHxD)		mm	1,900 x 1,887 x 919	1,900 x 1,887 x 919	1,900 x 1,887 x 919
Operating Water Temp. Range	Cooling		°C	5 ~ 25	5 ~ 25	5 ~ 25
	Cooling (If using brine)		°C	-10~25	-10~25	-10~25
	Heating		°C	25 ~ 55	25 ~ 55	25 ~ 55
Operating Water flow Range	Water Flow Rate		LPM	60 ~ 240	80 ~ 320	93 ~ 400
	Minimum water storage in the system		L	294	392	490
Operating Amb. Temp. Range	Cooling		°C	-15 ~ 48	-15 ~ 48	-15 ~ 48
	Heating		°C	-25 ~ 43	-25 ~ 43	-25 ~ 43

[NOTE]

*Specification may be subject to change without prior notice.

1)Specification comply with EN14511.

2) Nominal cooling capacities are based on;
Chilled water inlet / outlet temperature : 12 / 7 °C, outdoor temperature : 35 °C DB, 24 °C WB.

3) Nominal heating capacities are based on;
Heating water inlet / outlet temperature : 40 / 45 °C, outdoor temperature : 7 °C DB, 6 °C WB.

4) Sound level was acquired in an anechoic room. Thus actual noise level may be different depending on the installation conditions.

2 Modulation guide

HP	kW	Standard				High Efficiency		
		AG042	AG056	AG070	Recommended pipe size [A]	AG042	AG056	Recommended pipe size [A]
15	**42**	1			40			40
20	**56**		1		40			40
25	**70**			1	50			50
30	**84**	2			50			50
40	**112**		2		65			65
45	**126**	3			65			65
50	**140**			2	80			80
60	**168**		3		80	4		80
75	**210**			3	80	5		80
80	**224**		4		100			100
90	**252**	6			100			100
100	**280**			4	100		5	100
105	**294**	7			100			100
120	**336**		6		100	8		100
125	**350**			5	100			100
135	**378**	9			100			100
140	**392**		7		100			100
150	**420**	10		6	100			100
160	**448**		8		125			125
165	**462**	11			125			125
175	**490**			7	125			125
180	**504**		9		125	12		125
195	**546**	13			125			125
200	**560**			8	125		10	125
210	**588**	14			125			125
220	**616**		11		125			125
225	**630**	15		9	125			125
240	**672**		12		125	16		125
250	**700**			10	125			125
260	**728**		13		125			125
275	**770**			11	150			150
280	**784**		14		150			150
300	**840**			12	150		15	150
320	**896**		16		150			150
325	**910**			13	150			150
350	**980**			14	150			150
375	**1050**			15	150			150
400	**1120**			16	150			150

Total capacity of modulated units = Σ capacity of each chiller unit

Total power input of modulated units = Σ power input of each chiller unit

3 Capacity table

Cooling (ΔT = 5°C)

Model	LWE	Outdoor Air Temperature (℃, DB)																	
		20			25			30			35			40			45		
		TC	PI	Water flow	TC	PI	Water flow	TC	PI	Water flow	TC	PI	Water flow	TC	PI	Water flow	TC	PI	Water flow
		kW	kW	LPM	kW	kW	LPM	kW	kW	LPM	kW	kW	LPM	kW	kW	LPM	kW	kW	LPM
AG042*	-10 2)	32.05	8.65	91.56	29.62	9.26	84.64	27.20	10.00	77.72	24.78	10.87	70.80	22.48	11.93	64.23	15.54	14.13	60.00 3)
	-5 2)	41.16	9.02	117.60	40.32	9.76	115.20	38.64	10.50	110.40	36.96	11.49	105.60	33.12	12.54	94.63	24.61	15.47	70.30
	0 2)	41.58	9.39	118.80	40.74	10.13	116.40	39.06	10.87	111.60	37.38	11.86	106.80	33.46	12.99	95.61	26.37	15.87	75.35
	5	45.36	9.63	129.60	44.52	10.37	127.20	42.84	11.24	122.40	40.74	12.23	116.40	36.71	13.35	104.88	28.14	16.27	80.40
	7	46.62	9.76	133.20	45.78	10.50	130.80	44.10	11.36	126.00	42.00	12.35	120.00	37.72	13.49	107.76	28.98	16.34	82.80
	9	49.56	9.88	141.60	48.30	10.62	138.00	47.04	11.49	134.40	44.52	12.47	127.20	39.98	13.62	114.24	30.66	16.79	87.60
	11	51.66	10.00	147.60	50.40	10.74	144.00	48.72	11.61	139.20	46.62	12.60	133.20	41.75	13.76	119.28	32.34	17.25	92.40
	13	53.76	10.13	153.60	52.50	10.87	150.00	50.82	11.73	145.20	48.30	12.72	138.00	43.47	13.91	124.20	33.60	17.47	96.00
	15	55.86	10.25	159.60	54.60	10.99	156.00	52.92	11.86	151.20	50.40	12.84	144.00	45.15	14.08	129.00	34.86	17.68	99.60
	18	58.80	10.37	168.00	57.54	11.12	164.40	55.44	12.10	158.40	52.92	13.09	151.20	47.42	14.35	135.48	36.54	17.88	104.40
	25	63.00	10.62	180.00	61.74	11.36	176.40	59.64	12.35	170.40	56.70	13.34	162.00	50.95	14.57	145.56	39.06	17.91	111.60
AG056*	-10 2)	42.73	13.07	122.08	39.50	14.00	112.85	36.27	15.12	103.63	33.04	16.43	94.40	29.22	16.82	83.50	18.13	15.81	80.00 3)
	-5 2)	54.88	13.63	156.80	53.76	14.75	153.60	51.52	15.87	147.20	49.28	17.36	140.80	43.06	17.67	123.02	28.71	17.84	82.02
	0 2)	55.44	14.19	158.40	54.32	15.31	155.20	52.08	16.43	148.80	49.84	17.92	142.40	43.50	18.30	124.29	30.77	18.30	87.91
	5	60.48	14.56	172.80	59.36	15.68	169.60	57.12	16.99	163.20	54.32	18.48	155.20	47.72	18.82	136.34	32.83	18.76	93.80
	7	62.16	14.75	177.60	61.04	15.87	174.40	58.80	17.18	168.00	56.00	18.67	160.00	49.03	19.01	140.09	33.81	18.85	96.60
	9	66.08	14.94	188.80	64.40	16.06	184.00	62.72	17.36	179.20	59.36	18.86	169.60	51.98	19.20	148.51	35.77	19.36	102.20
	11	68.88	15.12	196.80	67.20	16.24	192.00	64.96	17.55	185.60	62.16	19.04	177.60	54.27	19.39	155.06	37.73	19.90	107.80
	13	71.68	15.31	204.80	70.00	16.43	200.00	67.76	17.74	193.60	64.40	19.23	184.00	56.51	19.60	161.46	39.20	20.15	112.00
	15	74.48	15.50	212.80	72.80	16.62	208.00	70.56	17.92	201.60	67.20	19.42	192.00	58.70	19.84	167.70	40.67	20.40	116.20
	18	78.40	15.68	224.00	76.72	16.80	219.20	73.92	18.30	211.20	70.56	19.79	201.60	61.64	20.23	176.12	42.63	20.62	121.80
	25	84.00	16.06	240.00	82.32	17.18	235.20	79.52	18.67	227.20	75.60	20.16	216.00	66.23	20.54	189.23	45.57	20.66	130.20
AG070*	-10 2)	49.59	18.20	141.70	45.85	19.50	130.99	42.10	21.06	120.28	38.35	22.88	109.57	33.56	22.49	95.88	19.80	17.98	92.90 3)
	-5 2)	63.70	18.98	182.00	62.40	20.54	178.29	59.80	22.10	170.86	57.20	24.18	163.43	49.44	23.62	141.27	31.34	20.44	92.90 3)
	0 2)	64.35	19.76	183.86	63.05	21.32	180.14	60.45	22.88	172.71	57.85	24.96	165.29	49.95	24.47	142.73	33.59	21.13	95.98
	5	70.20	20.28	200.57	68.90	21.84	196.86	66.30	23.66	189.43	63.05	25.74	180.14	54.80	25.15	156.57	35.85	21.66	102.41
	7	72.15	20.54	206.14	70.85	22.10	202.43	68.25	23.92	195.00	65.00	26.00	185.71	56.30	25.41	160.87	36.92	21.76	105.47
	9	76.70	20.80	219.14	74.75	22.36	213.57	72.80	24.18	208.00	68.90	26.26	196.86	59.69	25.67	170.54	39.06	22.35	111.59
	11	79.95	21.06	228.43	78.00	22.62	222.86	75.40	24.44	215.43	72.15	26.52	206.14	62.32	25.92	178.07	41.20	22.97	117.70
	13	83.20	21.32	237.71	81.25	22.88	232.14	78.65	24.70	224.71	74.75	26.78	213.57	64.89	26.20	185.41	42.80	23.26	122.29
	15	86.45	21.58	247.00	84.50	23.14	241.43	81.90	24.96	234.00	78.00	27.04	222.86	67.40	26.53	192.58	44.41	23.55	126.87
	18	91.00	21.84	260.00	89.05	23.40	254.43	85.80	25.48	245.14	81.90	27.56	234.00	70.79	27.04	202.25	46.55	23.81	132.99
	25	97.50	22.36	278.57	95.55	23.92	273.00	92.30	26.00	263.71	87.75	28.08	250.71	76.06	27.46	217.30	49.76	23.85	142.16

Cooling (ΔT = 7°C)

Model	LWE	Outdoor Air Temperature (℃, DB)																	
		20			25			30			35			40			45		
		TC	PI	Water flow	TC	PI	Water flow	TC	PI	Water flow	TC	PI	Water flow	TC	PI	Water flow	TC	PI	Water flow
		kW	kW	LPM	kW	kW	LPM	kW	kW	LPM	kW	kW	LPM	kW	kW	LPM	kW	kW	LPM
AG042*	-10 2)	32.05	8.12	65.40	29.62	8.70	60.46	27.20	9.25	60.00 3)	24.78	9.85	60.00 3)	22.48	10.59	60.00 3)	15.54	12.25	60.00 3)
	-5 2)	41.16	8.91	84.00	40.32	9.67	82.29	38.64	10.36	78.86	36.96	11.36	75.43	33.12	12.40	67.59	24.61	14.71	60.00 3)
	0 2)	41.58	9.28	84.86	40.74	9.99	83.14	39.06	10.72	79.71	37.38	11.72	76.29	33.46	12.84	68.29	26.37	15.34	60.00 3)
	5	45.36	9.05	92.57	44.52	9.75	90.86	42.84	10.56	87.43	40.74	11.49	83.14	36.71	12.54	74.91	28.14	15.15	60.00 3)
	7	46.62	9.67	95.14	45.78	10.40	93.43	44.10	11.23	90.00	42.00	12.21	85.71	37.72	13.36	76.97	28.98	16.15	60.00 3)
	9	49.56	9.75	101.14	48.30	10.48	98.57	47.04	11.38	96.00	44.52	12.31	90.86	39.98	13.47	81.60	30.66	16.56	62.57
	11	51.66	9.91	105.43	50.40	10.65	102.86	48.72	11.48	99.43	46.62	12.46	95.14	41.75	13.63	85.20	32.34	17.09	66.00
	13	53.76	9.99	109.71	52.50	10.77	107.14	50.82	11.60	103.71	48.30	12.58	98.57	43.47	13.78	88.71	33.60	17.24	68.57
	15	55.86	10.14	114.00	54.60	10.87	111.43	52.92	11.72	108.00	50.40	12.73	102.86	45.15	13.89	92.14	34.86	17.45	71.14
	18	58.80	10.26	120.00	57.54	10.97	117.43	55.44	11.99	113.14	52.92	12.94	108.00	47.42	14.16	96.77	36.54	17.68	74.57
	25	63.00	10.50	128.57	61.74	11.26	126.00	59.64	12.21	121.71	56.70	13.16	115.71	50.95	14.44	103.97	39.06	17.67	79.71
AG056*	-10 2)	42.73	12.28	87.20	39.50	13.15	80.61	36.27	13.98	80.00 3)	33.04	14.90	80.00 3)	29.22	14.85	80.00 3)	18.13	13.65	80.00 3)
	-5 2)	54.88	13.50	112.00	53.76	14.56	109.71	51.52	15.69	105.14	49.28	17.13	100.57	43.06	17.47	87.87	28.71	16.54	80.00 3)
	0 2)	55.44	14.03	113.14	54.32	15.17	110.86	52.08	16.25	106.29	49.84	17.69	101.71	43.50	18.14	88.78	30.77	17.17	80.00 3)
	5	60.48	13.68	123.43	59.36	14.73	121.14	57.12	15.96	116.57	54.32	17.36	110.86	47.72	17.68	97.39	32.83	16.99	80.00 3)
	7	62.16	14.61	126.86	61.04	15.72	124.57	58.80	17.02	120.00	56.00	18.42	114.29	49.03	18.76	100.06	33.81	18.08	80.00 3)
	9	66.08	14.77	134.86	64.40	15.84	131.43	62.72	17.13	128.00	59.36	18.61	121.14	51.98	19.02	106.08	35.77	18.79	80.00 3)
	11	68.88	14.98	140.57	67.20	16.03	137.14	64.96	17.32	132.57	62.16	18.83	126.86	54.27	19.17	110.76	37.73	19.56	80.00 3)
	13	71.68	15.14	146.29	70.00	16.28	142.86	67.76	17.57	138.29	64.40	18.98	131.43	56.51	19.34	115.33	39.20	19.93	80.00
	15	74.48	15.35	152.00	72.80	16.43	148.57	70.56	17.76	144.00	67.20	19.20	137.14	58.70	19.62	119.79	40.67	20.21	83.00
	18	78.40	15.54	160.00	76.72	16.58	156.57	73.92	18.09	150.86	70.56	19.53	144.00	61.64	20.04	125.80	42.63	20.39	87.00
	25	84.00	15.91	171.43	82.32	17.02	168.00	79.52	18.46	162.29	75.60	19.90	154.29	66.23	20.35	135.16	45.57	20.47	93.00
AG070*	-10 2)	49.59	17.10	101.21	45.85	18.32	93.56	42.10	19.47	92.90 3)	38.35	20.74	92.90 3)	33.56	19.80	92.90 3)	19.80	15.50	92.90 3)
	-5 2)	63.70	18.73	130.00	62.40	20.31	127.35	59.80	21.85	122.04	57.20	23.91	116.73	49.44	23.36	100.91	31.34	18.75	92.90 3)
	0 2)	64.35	19.54	131.33	63.05	21.08	128.67	60.45	22.67	123.37	57.85	24.68	118.06	49.95	24.15	101.95	33.59	19.62	92.90 3)
	5	70.20	19.05	143.27	68.90	20.52	140.61	66.30	22.23	135.31	63.05	24.18	128.67	54.80	23.63	111.84	35.85	19.35	92.90 3)
	7	72.15	20.35	147.24	70.85	21.90	144.59	68.25	23.61	139.29	65.00	25.66	132.65	56.30	25.13	114.91	36.92	20.56	92.90 3)
	9	76.70	20.61	156.53	74.75	22.11	152.55	72.80	23.86	148.57	68.90	25.97	140.61	59.69	25.33	121.82	39.06	21.37	92.90 3)
	11	79.95	20.78	163.16	78.00	22.32	159.18	75.40	24.17	153.88	72.15	26.17	147.24	62.32	25.58	127.19	41.20	22.30	92.90 3)
	13	83.20	21.08	169.80	81.25	22.67	165.82	78.65	24.37	160.51	74.75	26.48	152.55	64.89	25.96	132.44	42.80	22.67	92.90 3)
	15	86.45	21.34	176.43	84.50	22.84	172.45	81.90	24.73	167.14	78.00	26.68	159.18	67.40	26.28	137.56	44.41	23.17	92.90 3)
	18	91.00	21.64	185.71	89.05	23.18	181.73	85.80	25.14	175.10	81.90	27.20	167.14	70.79	26.68	144.47	46.55	23.49	94.99
	25	97.50	22.07	198.98	95.55	23.70	195.00	92.30	25.71	188.37	87.75	27.77	179.08	76.06	27.10	155.21	49.76	23.53	101.54

[NOTE]

* Capacity table may be subject to change without prior notice.

1) ΔT = Leaving water temperature - Entering water temperature

2) When using brine, refer to the capacity correction factors by brine %wt. (This capacity data is based on Ethylene glycol 50%wt.)

3) ΔT is comply with the condition of minimum flow-rate.

4) LWE : Leaving water temperature, TC : Total Capacity, PI : Power Input

3 Capacity table

Heating (ΔT = 5°C)

Model	LWE	Outdoor Air temperature (℃, DB)																													
		-20			-15			-10			-7			-2			2			7			15			20			24		
		TC	PI	Water flow	TC	PI	Water flow	TC	PI	Water flow	TC	PI	Water flow	TC	PI	Water flow	TC	PI	Water flow	TC	PI	Water flow	TC	PI	Water flow	TC	PI	Water flow	TC	PI	Water flow
		kW	kW	LPM	kW	kW	LPM	kW	kW	LPM	kW	kW	LPM	kW	kW	LPM	kW	kW	LPM	kW	kW	LPM	kW	kW	LPM	kW	kW	LPM	kW	kW	LPM
AG042*	30	35.14	16.53	100.40	36.81	14.86	105.17	38.90	13.76	111.14	40.36	13.28	115.31	43.13	12.73	123.23	45.66	11.64	130.46	49.20	10.40	140.57	55.75	10.51	159.29	60.40	8.82	172.57	60.40	8.63	172.57
	35	33.57	16.76	95.91	35.16	15.07	100.46	37.16	13.96	106.17	38.55	13.47	110.14	41.20	12.91	117.71	46.22	11.81	132.06	47.00	10.55	134.29	53.26	10.67	152.17	57.70	10.01	164.86	57.70	9.80	164.86
	40	31.79	17.76	90.83	33.29	15.97	95.11	35.18	14.79	100.51	36.50	14.28	104.29	39.01	13.68	111.46	41.30	12.52	118.00	44.50	11.18	127.14	50.42	11.30	144.06	54.63	11.20	156.09	54.63	10.96	156.09
	45	30.00	18.75	85.71	31.42	16.86	89.77	33.20	15.61	94.86	34.45	15.07	98.43	36.82	14.44	105.20	38.98	13.21	111.37	42.00	11.83	120.00	47.59	11.93	135.97	51.56	11.82	147.31	51.56	11.56	147.31
	50	21.78	18.51	62.23	22.81	16.65	65.17	24.10	15.41	68.86	25.01	14.88	71.46	26.73	14.26	76.37	28.30	13.04	80.86	30.49	11.65	87.11	34.55	11.78	98.71	37.43	11.67	106.94	37.43	11.41	106.94
	55	21.50	18.32	61.43	22.52	16.47	64.34	23.80	15.25	68.00	24.69	14.73	70.54	26.39	14.11	75.40	27.93	12.91	79.80	30.10	11.53	86.00	34.11	11.66	97.46	36.95	11.40	105.57	36.95	11.15	105.57
AG056*	30	46.85	26.90	133.87	49.08	23.08	140.23	51.87	20.36	148.19	53.81	19.64	153.75	57.51	18.83	164.30	60.88	17.22	173.94	65.60	15.38	187.43	74.33	15.55	212.38	80.53	13.05	230.10	80.53	12.77	230.10
	35	44.76	27.27	127.89	46.88	23.41	133.94	49.55	20.65	141.56	51.40	19.93	146.86	54.93	19.10	156.95	61.63	17.47	176.08	62.67	15.61	179.05	71.01	15.78	202.90	76.93	14.81	219.81	76.93	14.50	219.81
	40	42.39	28.90	121.10	44.39	24.81	126.82	46.91	21.88	134.02	48.67	21.12	139.05	52.01	20.24	148.61	55.07	18.52	157.33	59.33	16.54	169.52	67.23	16.72	192.08	72.84	16.57	208.11	72.84	16.21	208.11
	45	40.00	30.51	114.29	41.89	26.19	119.70	44.27	23.09	126.48	45.93	22.29	131.24	49.09	21.36	140.27	51.97	19.54	148.50	56.00	17.50	160.00	63.45	17.65	181.30	68.75	17.49	196.42	68.75	17.10	196.42
	50	29.04	30.12	82.97	30.41	25.86	86.90	32.13	22.80	91.81	33.35	22.01	95.28	35.64	21.09	101.83	37.73	19.29	107.81	40.65	17.23	116.15	46.07	17.43	131.62	49.91	17.26	142.59	49.91	16.89	142.59
	55	28.67	29.81	81.90	30.03	25.58	85.79	31.73	22.56	90.67	32.92	21.79	94.06	35.19	20.87	100.53	37.24	19.10	106.40	40.13	17.06	114.67	45.48	17.25	129.94	49.27	16.86	140.76	49.27	16.49	140.76
AG070*	30	58.15	37.49	166.14	60.91	32.17	174.03	64.37	28.37	183.91	66.79	27.38	190.82	71.37	26.25	203.91	75.56	24.00	215.88	81.41	21.44	232.61	92.25	21.67	263.58	99.95	18.18	285.56	99.95	17.80	285.56
	35	55.55	38.01	158.72	58.18	32.62	166.23	61.49	28.78	175.69	63.79	27.77	182.26	68.18	26.62	194.79	76.48	24.35	218.52	77.77	21.75	222.21	88.13	22.00	251.81	95.48	20.64	272.80	95.48	20.20	272.80
	40	52.60	40.28	150.30	55.09	34.57	157.39	58.21	30.49	166.33	60.40	29.44	172.57	64.55	28.20	184.44	68.34	25.81	195.26	73.64	23.05	210.39	83.43	23.30	238.38	90.40	23.09	258.28	90.40	22.59	258.28
	45	49.64	42.52	141.84	51.99	36.50	148.55	54.94	32.18	156.97	57.01	31.07	162.88	60.93	29.77	174.08	64.50	27.24	184.29	69.50	24.39	200.00	78.75	24.60	225.00	85.32	24.37	243.77	85.32	23.84	243.77
	50	36.04	41.98	102.97	37.75	36.04	107.84	39.88	31.77	113.94	41.39	30.68	118.24	44.23	29.40	126.38	46.83	26.88	133.80	50.45	24.02	144.15	57.17	24.29	163.35	61.94	24.06	176.96	61.94	23.53	176.96
	55	35.58	41.55	101.65	37.27	35.65	106.47	39.38	31.44	112.52	40.86	30.37	116.73	43.67	29.09	124.77	46.22	26.62	132.05	49.81	23.77	142.31	56.44	24.04	161.27	61.14	23.50	174.70	61.14	22.99	174.70

Heating (ΔT = 7°C)

Model	LWE	Outdoor Air temperature (℃, DB)																													
		-20			-15			-10			-7			-2			2			7			15			20			24		
		TC	PI	Water flow	TC	PI	Water flow	TC	PI	Water flow	TC	PI	Water flow	TC	PI	Water flow	TC	PI	Water flow	TC	PI	Water flow	TC	PI	Water flow	TC	PI	Water flow	TC	PI	Water flow
		kW	kW	LPM	kW	kW	LPM	kW	kW	LPM	kW	kW	LPM	kW	kW	LPM	kW	kW	LPM	kW	kW	LPM	kW	kW	LPM	kW	kW	LPM	kW	kW	LPM
AG042*	30	35.14	16.38	71.71	36.81	14.66	75.12	38.90	13.63	79.39	40.36	13.11	82.37	43.13	12.61	88.02	45.66	11.49	93.18	49.20	10.26	100.41	55.75	10.41	113.78	60.40	8.72	123.27	60.40	8.54	123.27
	35	33.57	16.57	68.51	35.16	14.93	71.76	37.16	13.78	75.84	38.55	13.29	78.67	41.20	12.77	84.08	46.22	11.65	94.33	47.00	10.41	95.92	53.26	10.55	108.69	57.70	9.92	117.76	57.70	9.67	117.76
	40	31.79	17.53	64.88	33.29	15.82	67.94	35.18	14.60	71.80	36.50	14.09	74.49	39.01	13.50	79.61	41.30	12.38	84.29	44.50	11.08	90.82	50.42	11.15	102.90	54.63	11.10	111.49	54.63	10.83	111.49
	45	30.00	18.54	61.22	31.42	16.70	64.12	33.20	15.40	67.76	34.45	14.90	70.31	36.82	14.28	75.14	38.98	13.09	79.55	42.00	11.72	85.71	47.59	11.77	97.12	51.56	11.66	105.22	51.56	11.43	105.22
	50	21.78	17.17	60.00 3)	22.81	15.58	60.00 3)	24.10	14.59	60.00 3)	25.01	14.26	60.00 3)	26.73	13.83	60.00 3)	28.30	12.82	60.00 3)	30.49	11.50	62.22	34.55	11.65	70.51	37.43	11.56	76.39	37.43	11.29	76.39
	55	21.50	16.10	60.00 3)	22.52	14.63	60.00 3)	23.80	13.71	60.00 3)	24.69	13.35	60.00 3)	26.39	12.97	60.00 3)	27.93	12.00	60.00 3)	30.10	10.83	61.43	34.11	10.95	69.61	36.95	10.71	75.41	36.95	10.47	75.41
AG056*	30	46.85	26.65	95.62	49.08	22.82	100.16	51.87	20.17	105.85	53.81	19.46	109.82	57.51	18.66	117.36	60.88	17.03	124.24	65.60	15.24	133.88	74.33	15.34	151.70	80.53	12.88	164.35	80.53	12.60	164.35
	35	44.76	27.02	91.35	46.88	23.15	95.67	49.55	20.42	101.12	51.40	19.66	104.90	54.93	18.92	112.11	61.63	17.24	125.77	62.67	15.46	127.89	71.01	15.61	144.93	76.93	14.67	157.01	76.93	14.30	157.01
	40	42.39	28.63	86.50	44.39	24.53	90.59	46.91	21.68	95.73	48.67	20.89	99.32	52.01	20.05	106.15	55.07	18.31	112.38	59.33	16.32	121.09	67.23	16.53	137.20	72.84	16.38	148.65	72.84	16.03	148.65
	45	40.00	30.23	81.63	41.89	25.89	85.50	44.27	22.83	90.34	45.93	22.09	93.74	49.09	21.08	100.19	51.97	19.32	106.07	56.00	17.27	114.29	63.45	17.45	129.50	68.75	17.32	140.30	68.75	16.91	140.30
	50	29.04	27.95	80.00 3)	30.41	24.29	80.00 3)	32.13	21.67	80.00 3)	33.35	21.05	80.00 3)	35.64	20.50	80.00 3)	37.73	18.97	80.00 3)	40.65	17.04	82.97	46.07	17.27	94.01	49.91	17.07	101.85	49.91	16.66	101.85
	55	28.67	26.20	80.00 3)	30.03	22.72	80.00 3)	31.73	20.28	80.00 3)	32.92	19.74	80.00 3)	35.19	19.18	80.00 3)	37.24	17.75	80.00 3)	40.13	16.02	81.90	45.48	16.20	92.82	49.27	15.84	100.54	49.27	15.49	100.54
AG070*	30	58.15	37.14	118.67	60.91	31.81	124.31	64.37	28.11	131.37	66.79	27.07	136.30	71.37	26.00	145.65	75.56	23.68	154.20	81.41	21.16	166.15	92.25	21.47	188.27	99.95	17.98	203.97	99.95	17.56	203.97
	35	55.55	37.58	113.37	58.18	32.26	118.74	61.49	28.52	125.49	63.79	27.46	130.19	68.18	26.37	139.14	76.48	24.08	156.09	77.77	21.55	158.72	88.13	21.75	179.86	95.48	20.45	194.86	95.48	20.02	194.86
	40	52.60	39.83	107.36	55.09	34.25	112.42	58.21	30.15	118.81	60.40	29.17	123.26	64.55	27.94	131.74	68.34	25.52	139.47	73.64	22.84	150.28	83.43	22.99	170.27	90.40	22.79	184.49	90.40	22.38	184.49
	45	49.64	42.05	101.31	51.99	36.09	106.11	54.94	31.76	112.12	57.01	30.72	116.34	60.93	29.50	124.34	64.50	26.88	131.64	69.50	24.07	141.84	78.75	24.32	160.71	85.32	24.10	174.12	85.32	23.57	174.12
	50	36.04	38.87	99.30 3)	37.75	33.85	99.30 3)	39.88	30.08	99.30 3)	41.39	29.40	99.30 3)	44.23	28.51	99.30 3)	46.83	26.38	99.30 3)	50.45	23.80	102.97	57.17	23.97	116.68	61.94	23.84	126.40	61.94	23.32	126.40
	55	35.58	36.51	99.30 3)	37.27	31.66	99.30 3)	39.38	28.26	99.30 3)	40.86	27.51	99.30 3)	43.67	26.73	99.30 3)	46.22	24.74	99.30 3)	49.81	22.33	101.65	56.44	22.58	115.19	61.14	22.08	124.78	61.14	21.59	124.78

[NOTE]

* Capacity table may be subject to change without prior notice.

1) ΔT = Leaving water temperature - Entering water temperature

2) When using brine, refer to the capacity correction factors by brine %wt.

3) ΔT is comply with the condition of minimum flow-rate.

4) LWE : Leaving water temperature, TC : Total Capacity, PI : Power Input

4 Capacity correction

1) Correction factor by % glycol

Anti-freeze	Ethylene glycol				Propylene glycol			
%wt	Freezing point	Correction factor			Freezing point	Correction factor		
		Capacity	Power Input	Pressure drop		Capacity	Power Input	Pressure drop
0%	0	1.000	1.000	1.000	0	1.000	1.000	1.000
10%	-4	0.989	1.000	1.010	-3	0.988	1.000	1.029
20%	-9	0.975	1.000	1.023	-7	0.973	1.000	1.061
30%	-16	0.960	1.000	1.041	-13	0.955	1.000	1.098
40%	-23	0.943	1.000	1.064	-22	0.933	1.000	1.142
50%	-37	0.924	1.000	1.082	-35	0.910	1.000	1.193

2) Defrosting correction factor (Capacity coefficient)

Model	Outdoor Air Temperature (℃, DB)								
	-10	-8	-6	-4	-2	0	2	5	7
AG042	0.99	0.99	0.99	0.98	0.94	0.91	0.89	0.94	1.00
AG056	0.99	0.99	0.98	0.97	0.92	0.90	0.88	0.93	1.00
AG070	0.99	0.98	0.96	0.95	0.91	0.88	0.86	0.91	1.00

Corrected heating capacity = Heating Capacity x Capacity coefficient
On heating operation, frost can be formed on heat exchanger according to outdoor temperature.
(Frost on heat exchanger results in decreasing the performance.)
To remove frost on heat exchanger of aircooled chiller unit, defrost operation is carried out periodically.
During defrost operation, capacity of aircooled chiller unit may decrease.
The decrement is not considered to the individual capacity tables.

3) Correction factor by water flow rate

Correction	% of norminal water flow rate								
	50	60	70	80	90	100	120	150	200
Power input	0.976	0.980	0.985	0.990	0.995	1.000	1.010	1.025	1.048
ΔT	10.0	8.3	7.1	6.3	5.6	5.0	4.2	3.3	2.5

4) Quiet function correction factor

Cooling

Quiet function	Outdoor Air Temperature (℃, DB)							
	0		20		35		45	
	Capacity	Power Input	Capacity	Power Input	Capacity	Power Input	Capacity	Power Input
Level 1	1.00	1.00	1.00	1.00	1.00	1.27	0.52	1.08
Level 2	1.00	1.00	1.00	1.00	1.00	1.36	0.51	1.07
Level 3	1.00	1.00	0.90	0.86	0.70	0.90	0.40	0.96

Heating

Quiet function	Outdoor Air Temperature (℃, DB)							
	-15		2		7		15	
	Capacity	Power Input	Capacity	Power Input	Capacity	Power Input	Capacity	Power Input
Level 1	0.47	1.08	0.88	1.21	1.00	1.24	1.00	1.00
Level 2	0.46	1.06	0.88	1.27	1.00	1.33	1.00	1.00
Level 3	0.34	0.96	0.60	0.92	0.67	0.91	1.00	1.00

5 Dimensional drawing

DVM Chiller

AG042/056/070KSVANH/EU

Units : mm / inches

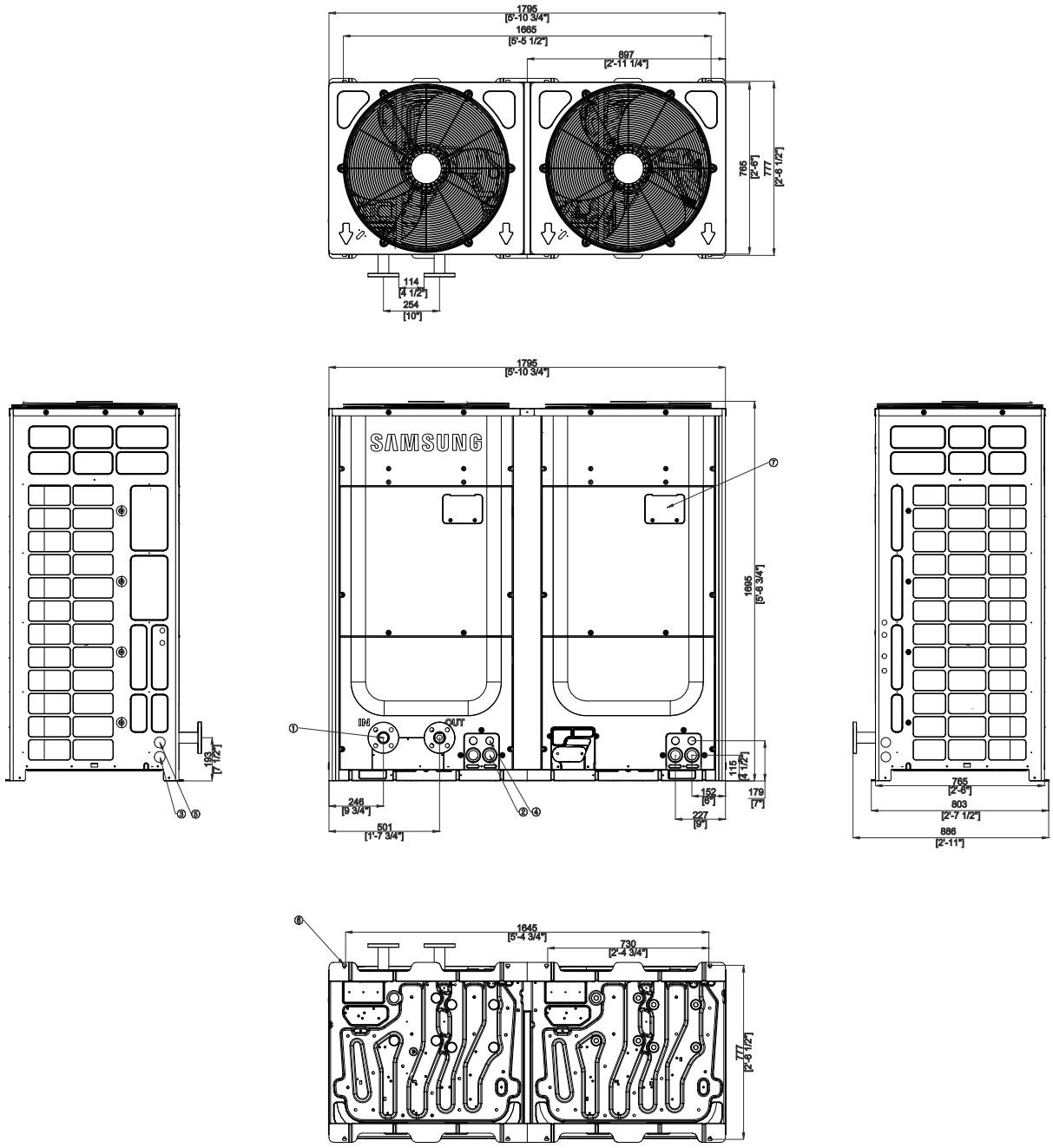

Table of descriptions			
1	Water Connections	7	Monitoring Window
2	Power wiring conduit(front)	8	
3	Power wiring conduit(side)	9	
4	Communication wiring conduit(front)	10	
5	Communication wiring conduit(side)	11	
6	Anchor Bolt Hole	12	

6 Sound level

1) Sound pressure level

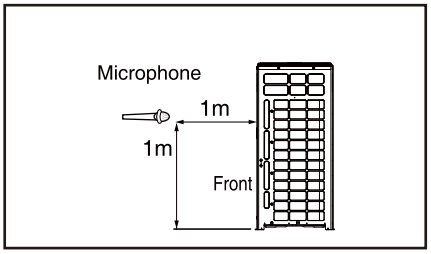

Unit: dB(A)

Model	Pressure
AG042KSVANH/EU	60
AG056KSVANH/EU	62
AG070KSVANH/EU	63

Note

* Specifications may be subject to change without prior notice
1) These operation values were obtained in an anechoic room.
2) Sound pressure level will vary depending on a range of factors such as the construction of the particular room.
3) Operation sound level may differ depending on operation and ambient conditions.

2) Quiet function

Model	Sound pressure level for quiet function [dB(A)]		
	Level 1	Level 2	Level 3
AG012	57	54	51
AG016	59	56	53
AG020	60	57	54

3) NC curves

a. AG042KSVANH/EU

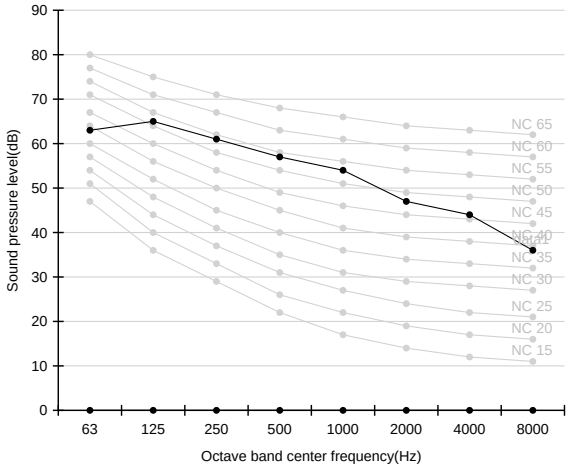

b. AG056KSVANH/EU

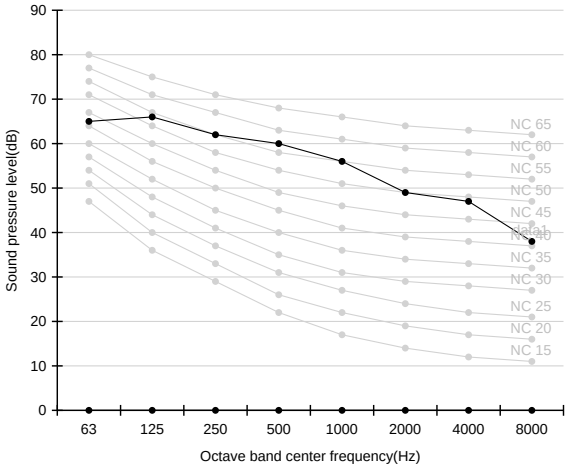

c. AG070KSVANH/EU

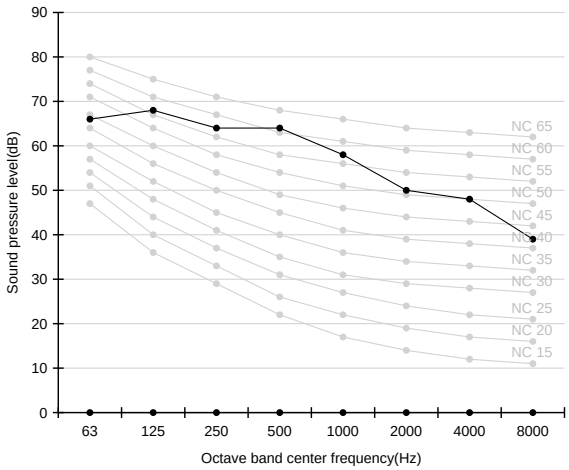

4) Sound power level

Note

* Specifications may be subject to change
  1) dBA = A-weighted sound power level.
  2) Reference power : 1pW.
  3) Measured according to ISO 3741.

Unit: dB(A)

Model	Power
AG042KSVANH/EU	80
AG056KSVANH/EU	83
AG070KSVANH/EU	85

a. AG042KSVANH/EU

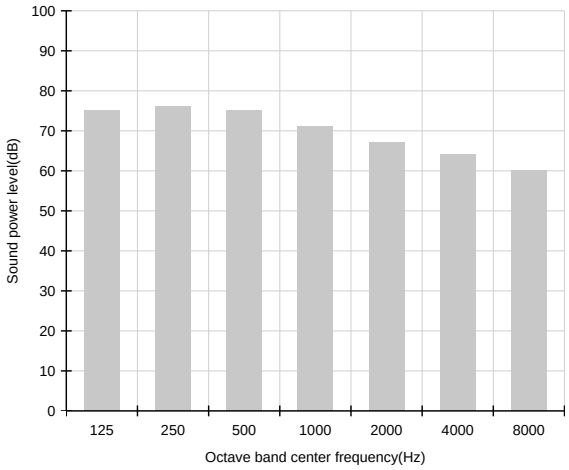

b. AG056KSVANH/EU

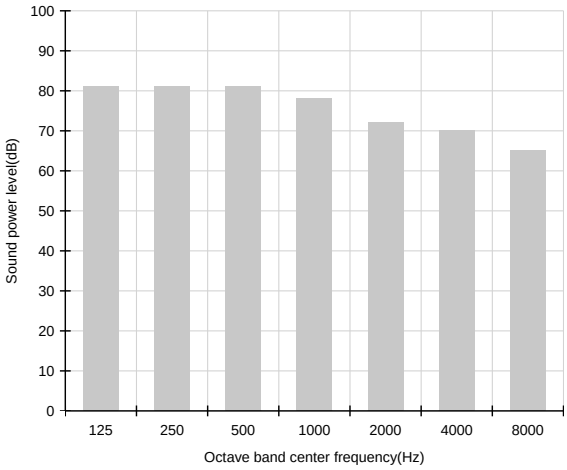

c. AG070KSVANH/EU

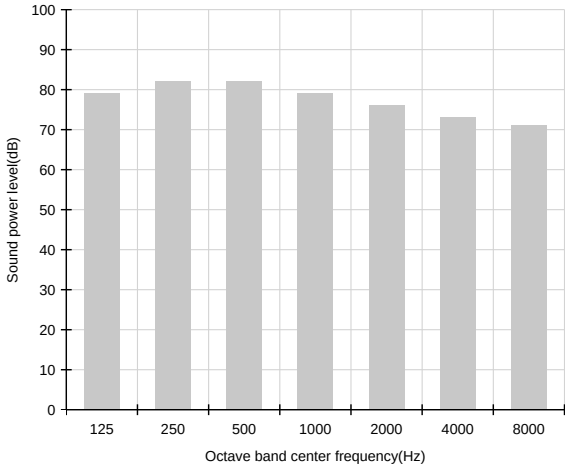

7 Electrical wiring diagram

1) Inverter controller

AG042/056KSVANH/EU

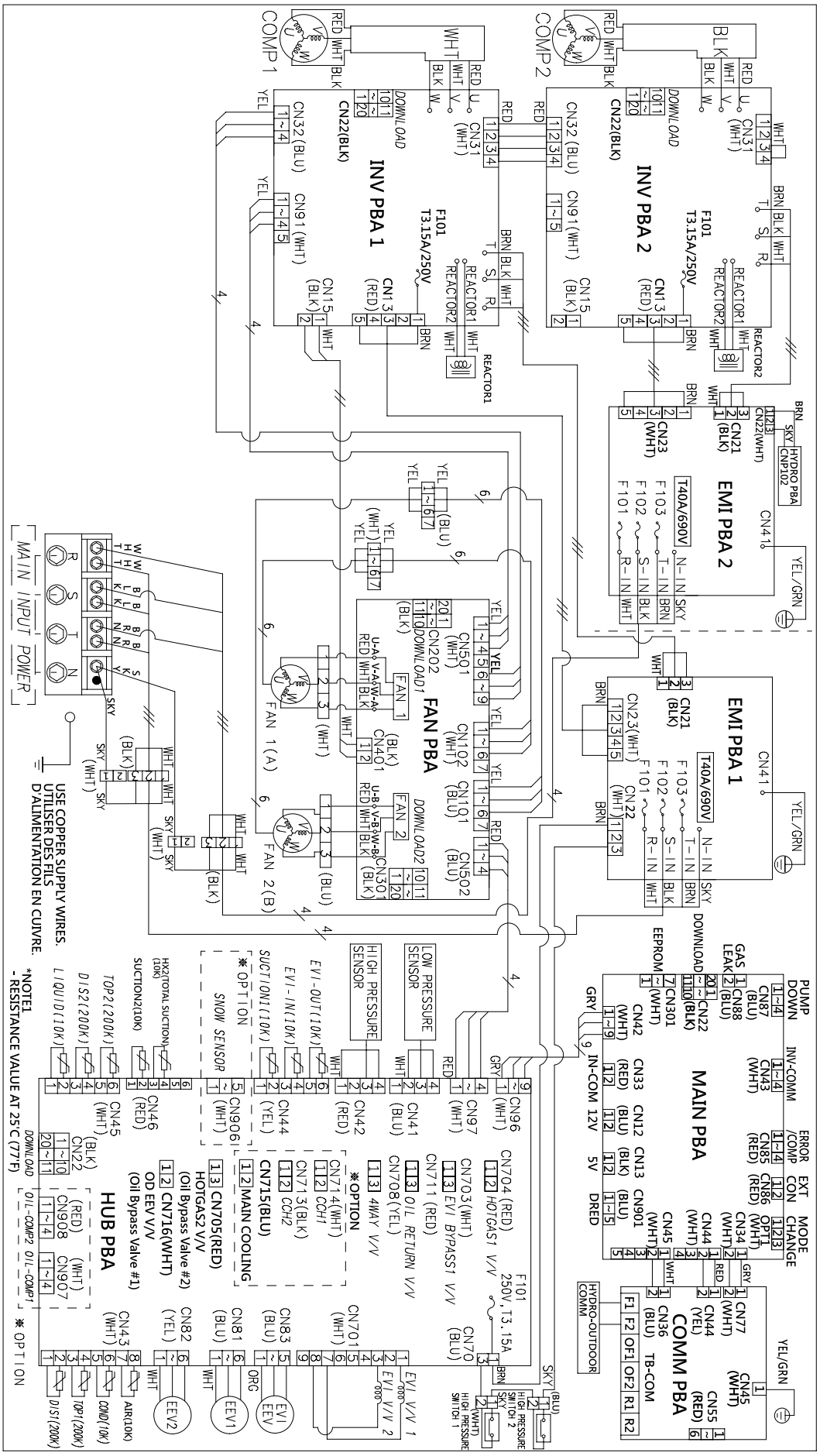

7 Electrical wiring diagram

1) Inverter controller

AG070KSVANH/EU

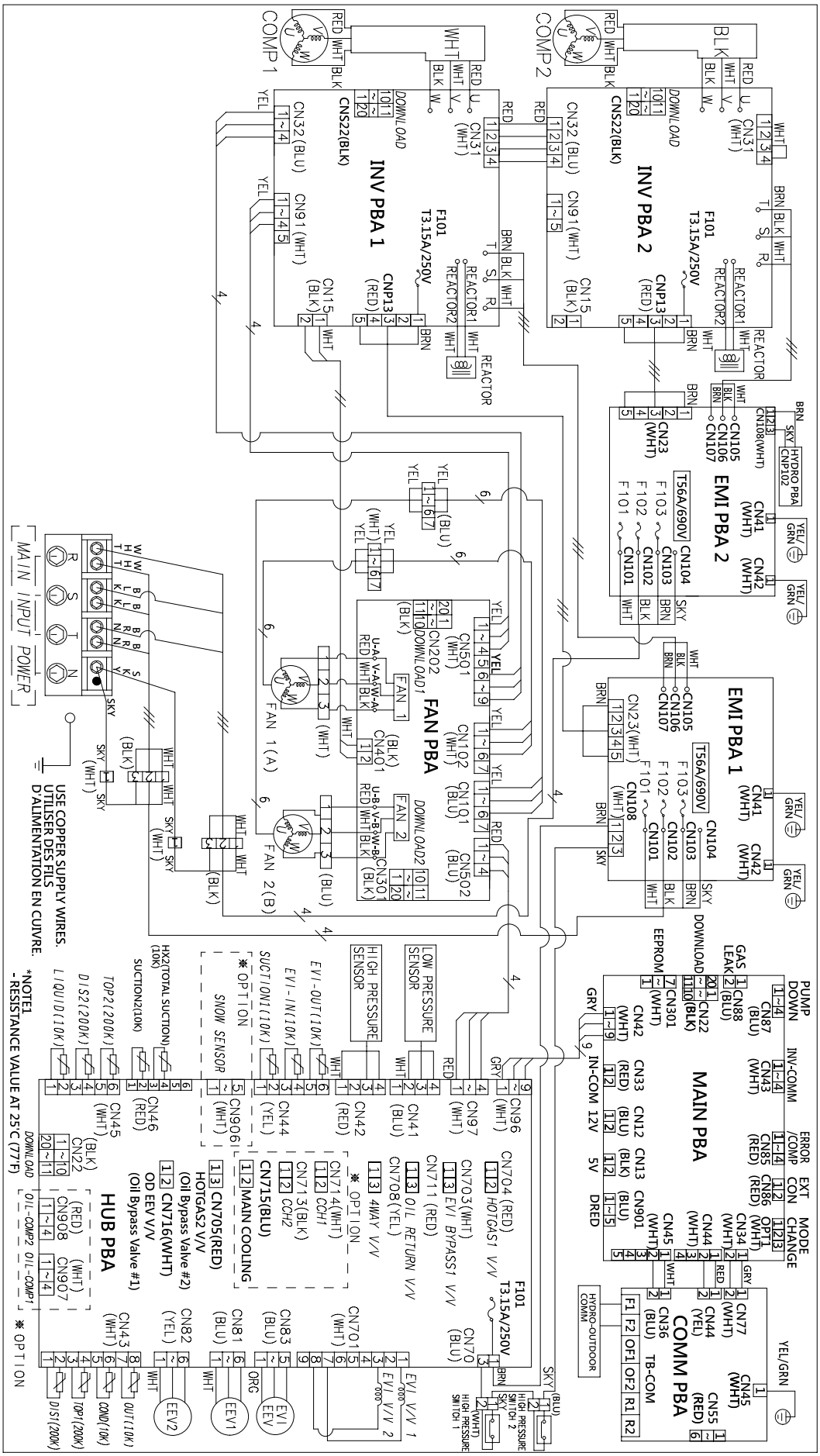

2) Hydro controller

AG042/056/070KSVANH/EU

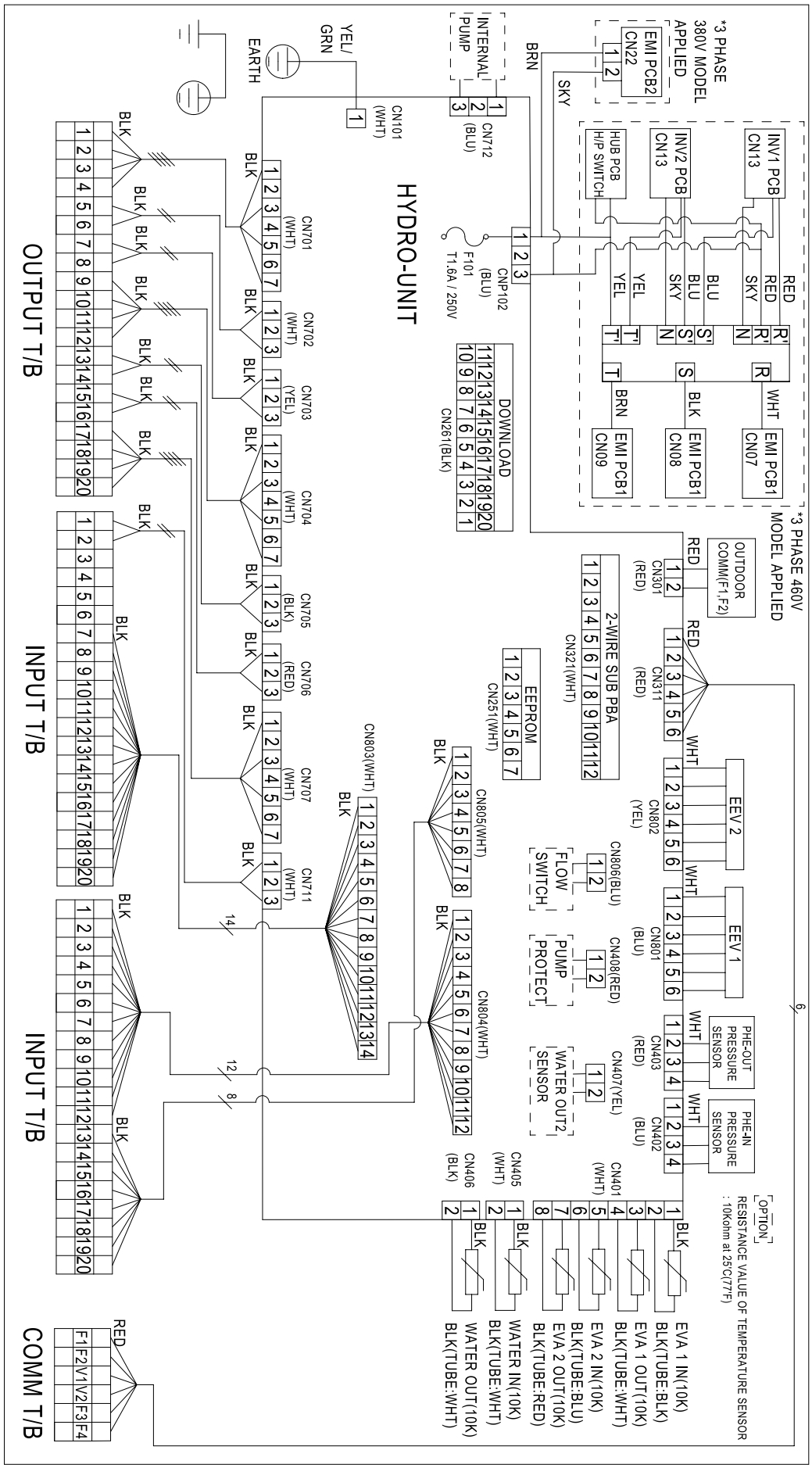

8 Cycle diagram

DVM Chiller

AG042/056/070KSVANH/EU

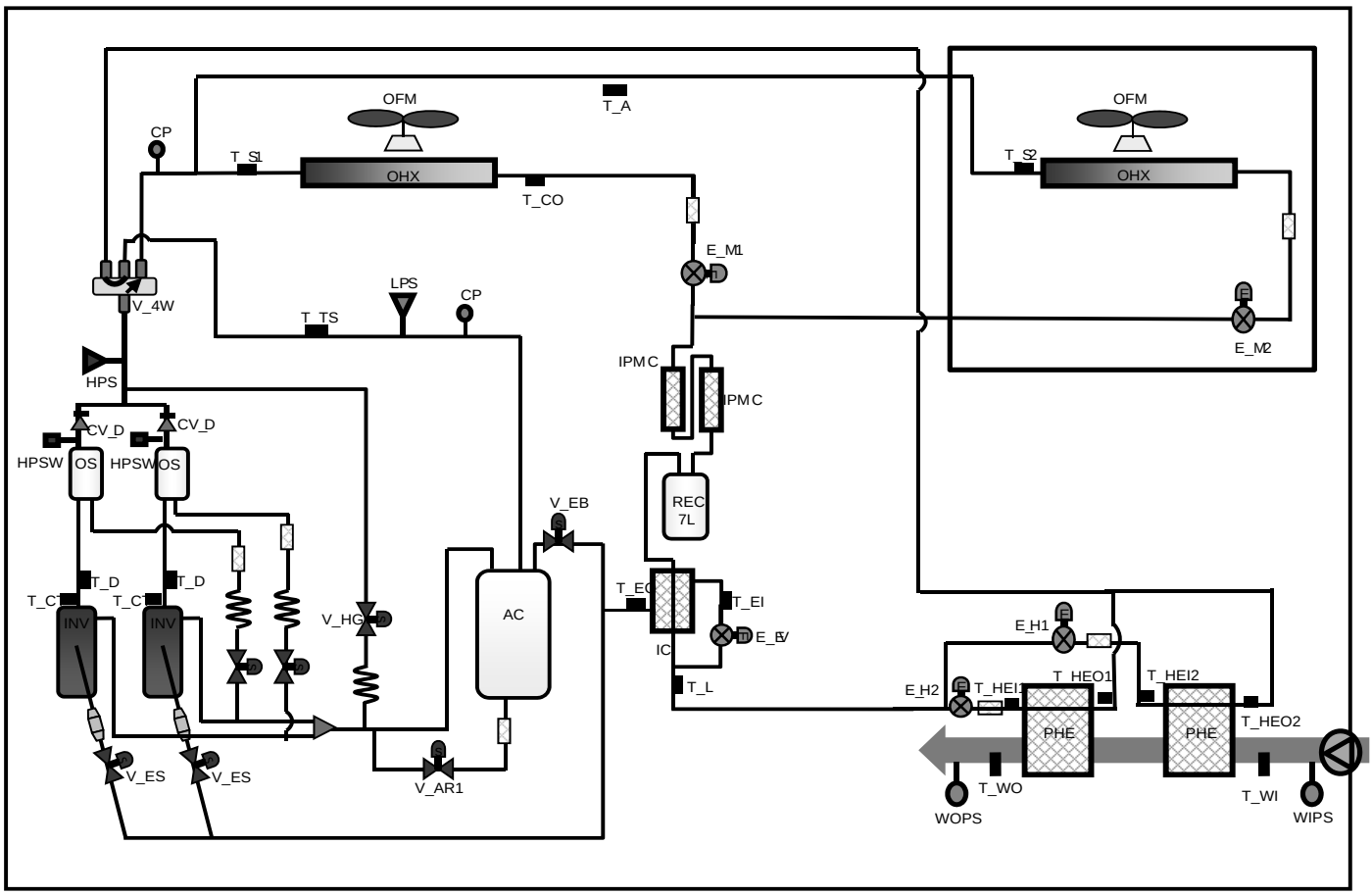

Classification	Description
INV	Inverter Compressor
OFM	Outdoor Fan Motor
OHX	Outdoor Heat Exchanger
AC	Accumulator
OS	Oil Separator
IC	Intercooler
IPMC	IPM Cooler
HPS	High Pressure Sensor
LPS	Low Pressure Sensor
WIPS	Water In Pressure Sensor
WOPS	Water Out Pressure Sensor
HPSW	High Pressure Switch
E_M1	Main EEV1
E_M2	Main EEV2
E_H1	Hydro EEV1
E_H2	Hydro EEV2
E_EV	EVI EEV
V_ES	EVI Solenoid Valve
V_EB	EVI Bypass Valve
PHE	Plate Heat Exchanger
REC	Receiver

Classification	Description
CP	Charging Port
V_HG	Hot Gas Bypass Valve
V_4W	4way Valve
V_AR	Accumulator Oil Return Valve
CV_D	Discharge Check Valve
T_D	Discharge Temperature Sensor
T_TS	Total Suction Temperature Sensor
T_S1	Suction1 Temperature Sensor
T_S2	Suction2 Temperature Sensor
T_CO	Condenser Out Temperature Sensor
T_EI	EVI In Temperture Sensor
T_EO	EVI Out Temperature Sensor
T_L	Liquid Tube Temperature Sensor
T_CT	Compressor Top Temperature Sensor
T_A	Ambient Temperature Sensor
T_HEI1	Hydro EVA In1 Temperature Sensor
T_HEI2	Hydro EVA In2 Temperature Sensor
T_HEO1	Hydro EVA Out1 Temperature Sensor
T_HEO2	Hydro EVA Out2 Temperature Sensor
T_WI	Water In Temperature Sensor
T_WO	Water Out Temperature Sensor

9 Oeration limit

1) Cooling

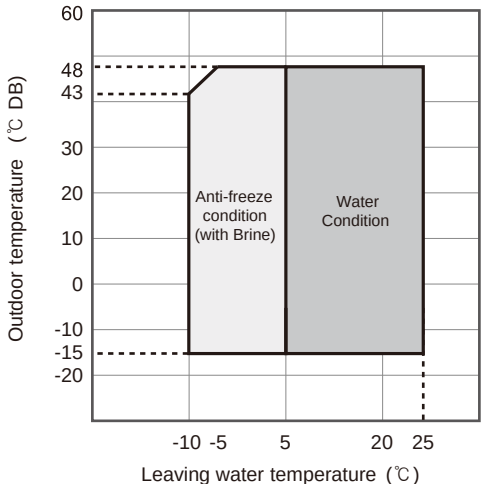

2) Heating

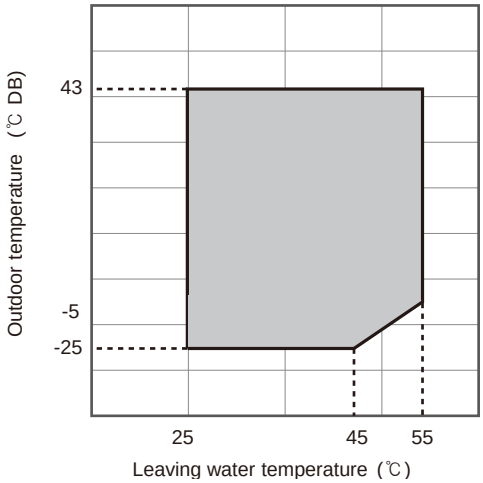

10 Hydraulic performance

1) AG042KSVANH/EU

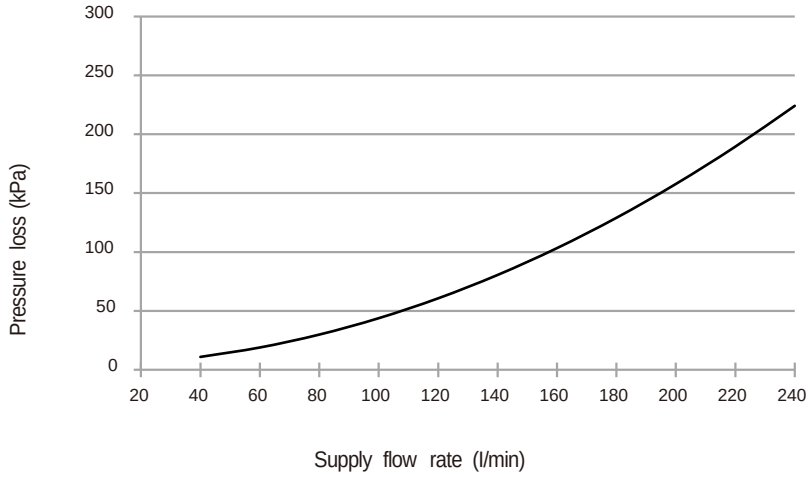

2) AG056KSVANH/EU

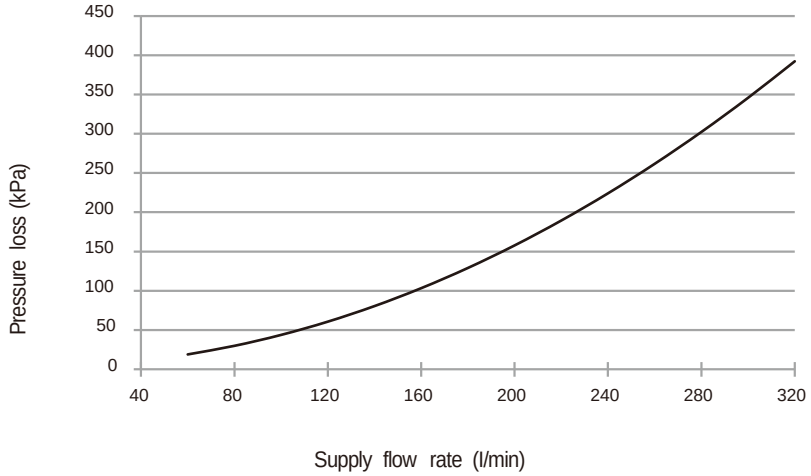

3) AG070KSVANH/EU

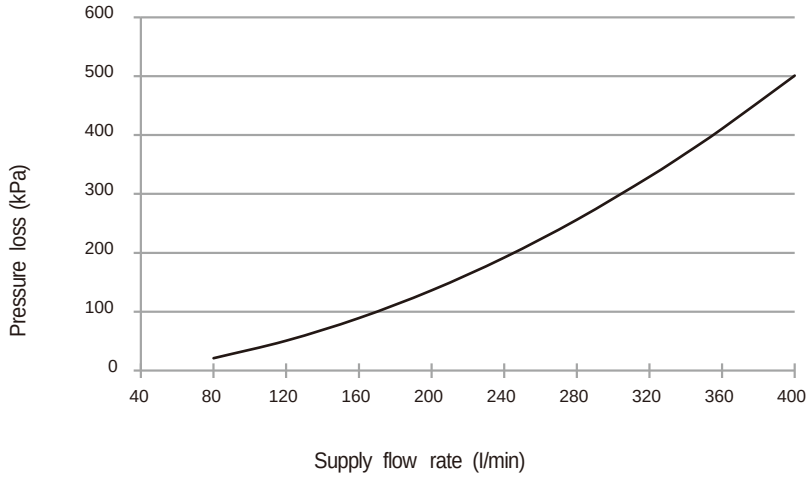

11 External contact

Wiring work

Output contact

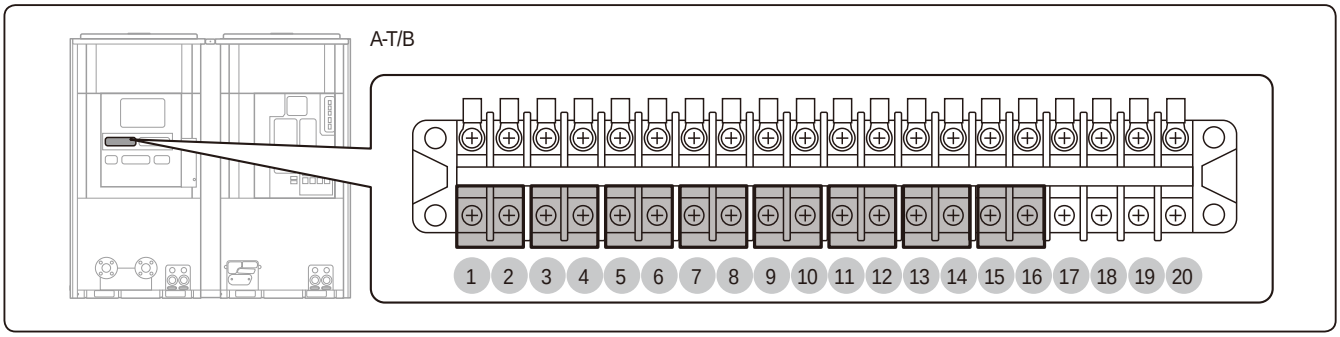

No.		Name	Signal	Function	Contact Short	Contact Open
A-T/B	1-2	Cooling/Heating display	Zero voltage contact	Display when operates in heating mode	Heat	Cool
	3-4	Operation display		Display when operates	Operate	Stop
	5-6	Warning display		Display when error occurs	Error occurred	No error
	7-8	Defrost operation display		Display when defrosting	Deforst ON	Defrost OFF
	9-10	Pump operation display		Display when pump operates	Pump ON	Pump OFF
	11-12	Comp operation display		Display when compressoroperates	Compressor ON	Compressor OFF
	13-14	Pump operation		Signal of pump operation	Pump signal ON	Pump signal OFF
	15-16	Freeze protection display		Display when freeze protection operates	Pump ON for freeze protection	Others
	17-18	Disuse	-	-	-	-
	19-20	Disuse	-	-	-	-

• Output written above is information about individual unit.

⚠ CAUTION

• You must turn off the power before working on external contact wiring.

• Output contact can be connected neutral contact and Open/Short only.

Terminal block	Tightening torque	
20P T/B	M3	0.5 ~ 0.75

[Example of output contact installation]

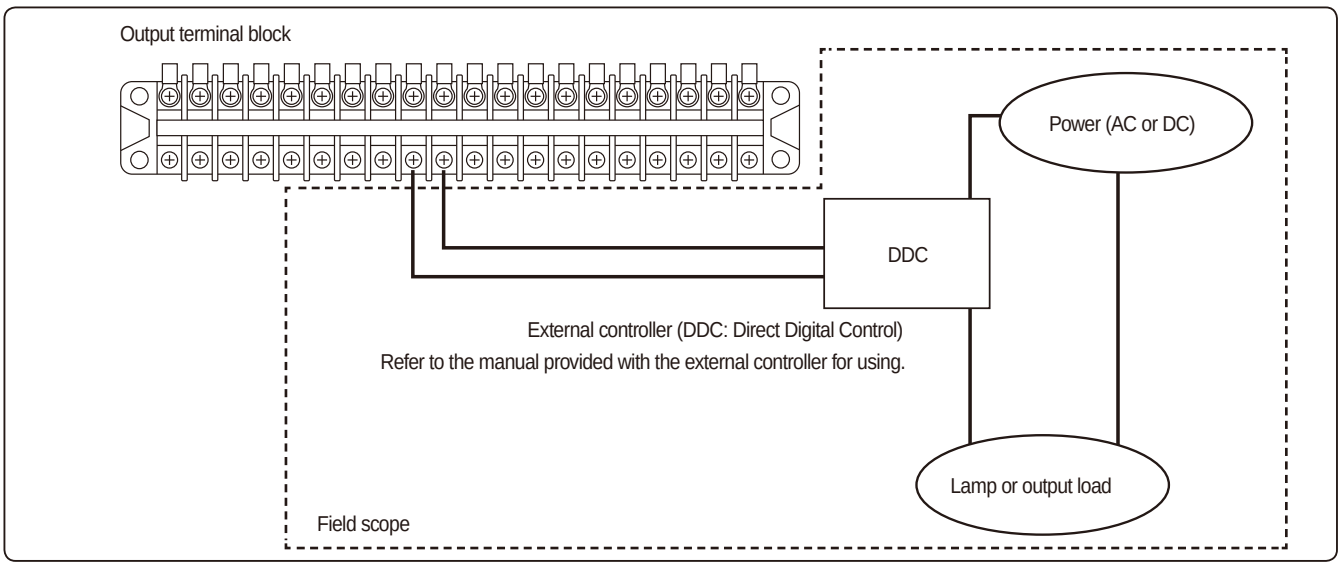

11 External contact

Wiring work

Input contact

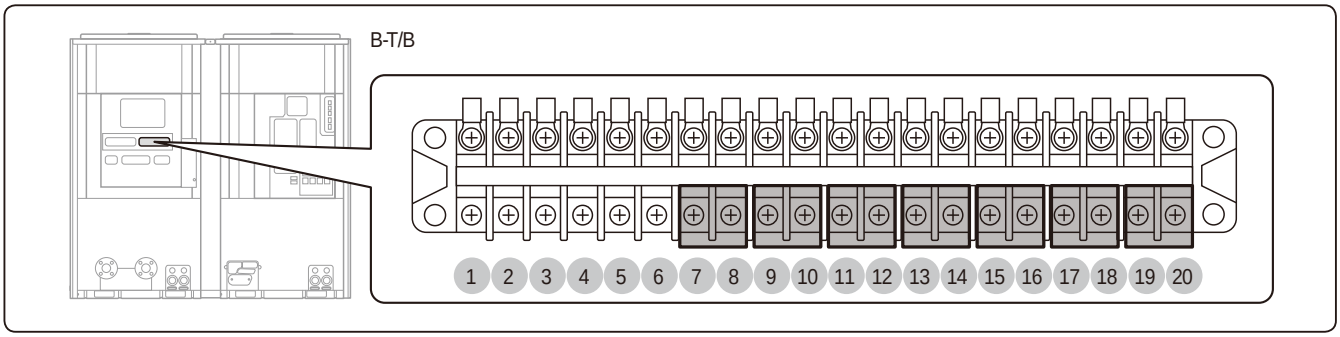

No.		Name	Signal	Function	Contact Short	Contact Open	Signal recognition	Setting unit
B-T/B	1-2	Disuse	-	-	-	-	-	-
	3-4	Disuse	-	-	-	-	-	-
	5-6	Disuse	-	-	-	-	-	-
	7-8	Pump interlock	Zero voltage contact	Signal about pump operation • Pump interlock error (E918) occurs if ON is not input when operating pump	Pump ON	Pump OFF	Usual input	Each unit
	9-10 11-12	Operation ON/OFF		Controlling operation ON/OFF Note1)	Note3)		Usual/instant input	Main unit of group Note4)
	13-14	Operation mode		Selecting cool/heat mode Note2)	Heat	Cool	Usual input	Main unit of group Note4)
	15-16	Hot water (Cool storage) mode		Entering hot water (cool storage) mode by external control • Cool + ON: Cool storage • Heat + ON: Hot water	Cool storage/ Hot water	Cool/Heat	Usual input	Main unit of group Note4)
	17-18	Hot water (Cool storage) control standard		Control depending on set temperature when ON Control depending on external hot water (cool storage) thermostat when OFF	Control by set temperature	Control by thermostat	Usual input	Main unit of group Note4)
	19-20	Hot water (Cool storage) thermostat signal		When thermostat is set as standard for hot water (cool storage) mode • Thermo ON when ON (Not over range of water outlet temperature) • Thermo OFF when OFF	Thermo ON	Thermo OFF	Usual input	Main unit of group Note4)

• To use hot water (cool storage) mode, the function should be activated by Module Controller.
• Usual input: Operate by current status of contact
  Instant input: Operate when contact signal changes from OFF to ON / from ON to OFF.

Note1) Operates when input method of Opearation On/Off is set as external contact
Note2) Operates when input method of operation mode is set as external contact
Note3) Operation depending on external contact operation ON/OFF input method
- When set as usual input (0): Operation ON when 9-10 is ON; OFF when 9-10 is OFF
- When set as instant input (1): Operation ON when 9-10 is ON more than 0.1 second; OFF when 11-12 is ON more than 0.1 second

Note4) Main unit of module when group is not available

11 External contact

Wiring work

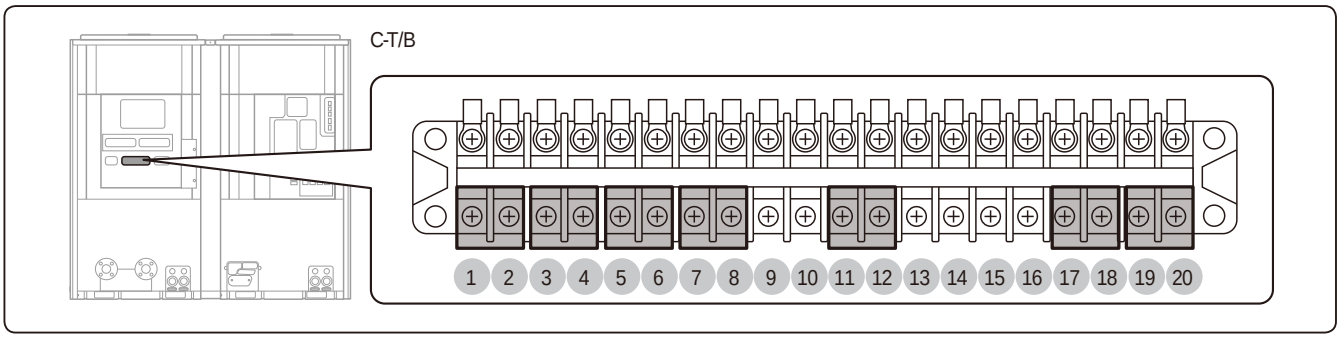

No.		Name	Signal	Function	Contact Short	Contact Open	Signal recognition	Setting unit
C-T/B	1-2	Quiet function	Zero voltage contact	Operate quiet function in level set by main option or module control Note4)	Quiet function	-	Usual input	Main unit of group Note8)
	3-4	Demand function		Operate demand function (current limet control) in level set by main opetion or module control Note5)	Demand function	-	Usual input	Main unit of group Note8)
	5-6	Forced fan function		Operate forced fan function Note6)	Forced fan function	-	Usual input	Main unit of group Note8)
	7-8	Unusual condition reset		Reset on error occurred status • Operates only when remote error reset input function is set to use	Reset error	-	Instant input	Main unit of module
	9-10	Disuse	-	No use (N/A)	-	-	-	-
	11-12	Water law	Zero voltage contact	Operate water law Note7)	Water law control	Water outlet set temperature control	Usual input	Main unit of group Note8)
	13-14	Disuse	-	No use (N/A)	-	-	-	-
	15-16	Disuse	-	No use (N/A)	-	-	-	-
	17-18	Set temperature/ room temperature sensor	Analog current	Recognize water outlet set temperature by external input (4 ~ 20 mA) Note1) Recognize value of room temperature sensor (4 ~ 20 mA) when standard for water law is room temperautre Note2)	-	-	Current input	Main unit of group Note8)
	19-20	External water outlet temperature	Analog current	Recognize external water outlet temperature by external temperature sensor (4 ~ 20 mA) Note3)	-	-	Current input	Main unit of group Note8)

• Usual input: Operate by current status of contact
Instant input: Operate when contact signal changes from OFF to ON / from ON to OFF

11 External contact

Wiring work

Note1) Value of water outlet set temperature = 5.625 x Current - 32.5
Heat (Hot water) mode recognizes minimum 25 °C and maximum 55 °C
Cool (Cool storage) mode recognizes minimum 5 °C and maximum 25 °C (Minimum -10 °C when using low temperature function)

Current (mA)	4	6	8	10	12	14	16	18	20
Temperature (°C)	-10.00	1.25	12.50	23.75	35.00	46.25	57.50	68.75	80.00

Note2) Room temperature = 6.25 x Current - 75

Current (mA)	4	6	8	10	12	14	16	18	20
Temperature (°C)	-50.00	-37.50	-25.00	-12.50	0.00	12.50	25.00	37.50	50.00

Note3) If operation pattern is not standard control, control standard temperautre depends on external water outlet temperature sensor. External water outlet temperautre sensor should be installed where can represent the temperature of water pipe system.

Water outlet temperature = 6.25 x current -55

Current (mA)	4	6	8	10	12	14	16	18	20
Temperature (°C)	-30.00	-17.50	-5.00	7.50	20.00	32.50	45.00	57.50	70.00

Note4) Operates when input method for quiet function is set as external contact

- If the contact is short, quiet function operates in Cool/Heat mode.
- Quiet function by Module Controller operates in Cool mode and night time.

Note5) Operates when input method for demand function is set as external contact

Note6) Operates when input method for forced fan function is set as external contact

Note7) Operates when input method for water law function is set as external contact

Note8) Main unit of module when group is not available

NOTE

- Room temperature sensor and external water outlet temperature temperature sensor is not supplied. Purchase and install the appropriate sensor according to the usage.
  - Room temperature sensor : 4~20mA (4mA : -50°C, 20mA : 50°C)
  - External water outlet temperature sensor : 4~20mA (4mA : -30°C, 20mA : 70°C)

[Example of input contact installation]

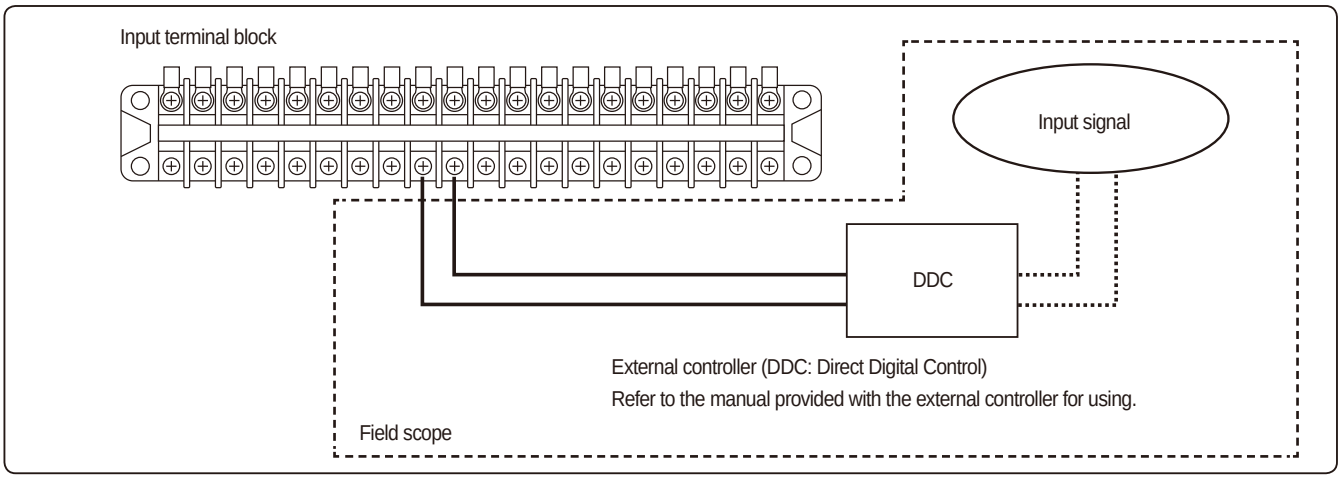

SAMSUNG

2016. 01.
Ver. 1.0

Samsung Electronics Co., LTD.
B2B PM / SE
Head Office (Suwon Korea) 129, Samsung-Ro, Yeongtong-Gu, Suwon City, Gyeonggi-Do, Korea 443-742
Website : www.samsung.com Email : airconditioner@samsung.com
Images and data in this book may subject to change without prior notice.

SAMSUNG